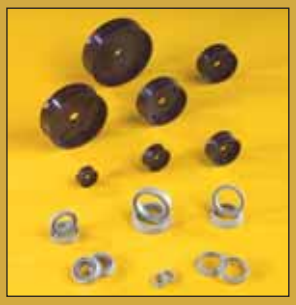

ARTICOLI TECNICI INDUSTRIALI
TECHNICAL PRODUCTS

CATALOGO TECNICO GENERALE
GENERAL TECHNICAL CATALOGUE
1.4.11

ARTICOLI TECNICI INDUSTRIALI
TECHNICAL PRODUCTS

PANORAMICA PRODOTTI

Il più vasto assortimento di sistemi di tenuta per

- Oleodinamica
- Pneumatica
- Controllo delle vibrazioni

Tenute speciali per i settori

- Petrolifero
- Industria Chimica
- Industria Navale
- Macchine Movimento Terra
- Movimentazione interna
- Macchine e attrezzi per Agricoltura
- Macchine e attrezzi per Edilizia

Sviluppo su progetto cliente

OVERVIEW

The most extensive range of sealing systems for

- *Hydraulic*
- *Pneumatic*
- *Vibration control*

Special seals for

- *Oil & Gas*
- *Chemical industry*
- *Marine Industry*
- *Machines Construction*
- *Material handling*
- *Machinery and equipment for Agriculture*
- *Machinery and equipment Construction*

Development on project reviews

Politica ambientale

Il presente **Catalogo Tecnico OTP®** è stato realizzato con **materiale ecologico certificato FSC**.
Il processo produttivo della carta avviene attenendosi alle vigenti normative: **DS/EN ISO 14001** e **ISO 9001:2000**.
La plastificazione della copertina è avvenuta utilizzando materiale biodegradabile; gli inchiostri per la stampa sono a base vegetale.
Per cortesia, continuate nel Vostro impegno costante per la salvaguardia dell'ambiente.

Environmental policy

*This **OTP® Technical Catalogue** has been produced with **100% ecological material certified FSC**.*
*Manufacturing process follows the regulations in force: **DS/EN ISO 14001** and **ISO 9001:2000**.*
Plasticization of the cover page has been achieved using biodegradable materials, inks used are vegetable based.
Please continue your actions in order to protect the environment and recycle properly.

Anelli di tenuta
Shaft seals

Articoli tecnici industriali
Technical products

OT Seals S.r.l.

Via Pitagora, 1 - 42048 Rubiera (Reggio Emilia) ITALIA - Tel. 0039 0522 622711 - Fax 0039 0522 622707
Codice Fiscale e Partita IVA CEE IT 02755260961 - R.E.A. C.C.I.A.A. RE 273273 - Capitale Sociale € 46.800 i.v.
info@otseals.it - **www.otseals.it**

DISTRIBUTORE EUROPEO - *EUROPEAN DISTRIBUTOR*

DISTRIBUTORE AUTORIZZATO - *AUTHORIZED DISTRIBUTOR*

Programma Generale di Vendita
General Sales Program

TTO®

Anelli di tenuta*
Anelli di tenuta per bussole di scorrimento*
Tappi di chiusura*

Shaft seals*
Seals for sliding ball bushing*
End Covers*

TTO®

Anelli di tenuta speciali*

Special shaft seals*

TTO®

Anelli raschiatori*

Wipers*

TTO®

Anelli V-ring per alberi rotanti*

V-ring seals for rotating shafts*

TTO®

Guarnizioni per pneumatica*

Pneumatic packings*

TTO®

PROTEK®

Anelli di tenuta per Giunti / Prese di forza / Riduttori /Macchine agricole / Eolico*

Shaft seal for Couplings / Power take-offs / Final drives / Agricultural machines / Wind-energy*

OTP®

Guarnizioni PTFE O-Rings*

PTFE packings O-Rings*

OTP®

Guarnizioni a labbro per oleodinamica/ pneumatica*

U-packings for hydraulic/ pneumatic*

OTP®

Guarnizioni in poliuretano per oleodinamica*

Polyurethane packings for hydraulic*

OTP®

Guarnizioni toroidali*

Toroidal seals*

OTP®

O-Rings metallici e C-Rings*

Metal O-Rings and C-Rings*

OTP®

Baderne

Packing rings

OTP®

Antivibranti*

Antivibrations mounts*

OTP®

O-Rings per impieghi in condizioni estreme*

O-Rings for extreme applications*

OTP®

Guarnizioni metalliche per alte pressioni e alte temperature*

Metallic seals for high pressure and high temperature*

OTP®

Guarnizioni PTFE per alberi rotanti*

PTFE packings for rotating shafts*

OTP®

Guarnizioni PTFE con molla energizzata*

PTFE energized packings*

OTP®

Anelli in elastomero incapsulati FEP*

FEP encapsulated elastomer O-Rings*

*** Per ulteriori informazioni, potete richiedere le schede tecniche di prodotto, disponibile anche on line: www.otseals.it**

**** For further information, please ask for the technical data sheet product, also available on line: www.otseals.it***

CATALOGO TECNICO GENERALE
GENERAL TECHNICAL CATALOGUE

Distributore / *Distributor*

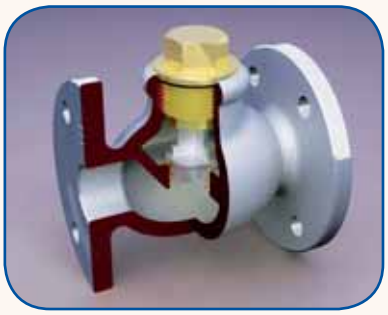

HALLITE Fluid Power Seal

Gamma prodotti	pag.	10

HALLITE Fluid Power Seal

Product Range	pag.	10

Classificazione guarnizioni per oleodinamica

pag. 187

Hidraulic seals classification

pag. 187

Guarnizioni per Pneumatica

Raschiatori	pag.	195
Tenute stelo	pag.	192/196
Tenute Pistone	pag.	191/197
Smorzatori	pag.	198
Guide	pag.	199

Pneumatic seals

Wipers	pag.	195
Rod Seals	pag.	192/196
Piston seals	pag.	191/197
Dampers	pag.	198
Guide	pag.	199

Guarnizioni in PTFE energizzate

Applicazioni e note tecniche	pag.	202

PTFE Spring seals

Applicational and data sheet	pag.	202

Guarnizioni Toroidali

O-Rings	pag.	211
O-Rings incapsulati FEP/PFA	pag.	240

Toroidal seals

O-Rings	pag.	211
O-Rings incapsulati FEP/PFA	pag.	240

Guarnizioni Metalliche

O-Rings/C-Rings metallici	pag.	246

Metal Seals

Metallic O-Rings/C-Rings	pag.	246

Antivibranti

Gamma prodotti	pag.	254

Antivibration Mounts

Product range	pag.	254

Baderne

Carbografite	pag.	262
PTFE	pag.	263
PTFE / fibra aramidica	pag.	264
Fibra Aramidica	pag.	265
Fibra di vetro	pag.	266

Packings

Carbographite	pag.	262
PTFE	pag.	263
PTFE / Aramid Fiber	pag.	264
Aramid Fiber	pag.	265
Fiberglass	pag.	266

GUARNIZIONI PER OLEODINAMICA
HYDRAULIC SEALS

Guarnizioni per stelo
Rod Seals

Section	Hallite Type	Page	Metric	Inch	Profile	bar (0 100 200 300 400 500 600 700)	°C (-50 0 +50 +100 +150 +200)	m/s (0 1 2 3 4 5)
	16	42	●			300	-30 +100°C	4.0
	605	106	●	●		400 700	-45 +110°C	1.0
	610	116	●			400	-45 +110°C	1.0
	616	119	●			240	-45 +110°C	1.0
	620	122		●		400	-45 +110°C	1.0
	621	123	●	●		700	-45 +110°C	1.0
	652	126	●			700	-45 +110°C	1.0
	653	129	●	●		700	-45 +110°C	1.0
	663	135	●			400	-45 +110°C	1.0

Guarnizioni stelo e pistone singolo effetto
Single Acting Rod and Piston Seals

Section	Hallite Type	Page	Metric	Inch	Profile	bar (0 100 200 300 400 500 600 700)	°C (-50 0 +50 +100 +150 +200)	m/s (0 1 2 3 4 5)
	15	40	●			300	-30 +100°C	0.5
	18	44	●	●		500	-30 +100°C	0.5
	511	96		●		350	-40 +110°C	0.5
	512	97		●		350	-40 +110°C	0.5

Guarnizioni stelo e pistone singolo effetto
Single Acting Rod and Piston Seals

Section	Hallite Type	Page	Metric	Inch	Profile	bar	°C	m/s
	513	98		●	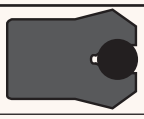	350	-40 +110°C	0.5
	601	101	●	●		400 700*	-45 +110°C	1.0

Guarnizioni pistone doppio effetto
Double Acting Piston Seals

Section	Hallite Type	Page	Metric	Inch	Profile	bar	°C	m/s
	50	59	●			350	-30 +100°C	0.5
	51	61	●		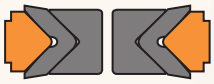	700	-30 +100°C	0.5
	52	63	●		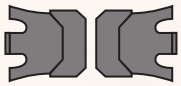	600	-30 +100°C	0.8
	53	65	●	●		500	-30 +100°C	0.5
	54	68	●	●		350	-30 +100°C	4.0
	56	71	●	●		500	-30 +100°C	0.5
	58	73	●	●		700	-30 +100°C	0.5
	64	76	●			400	-30 +100°C	0.5
	65	78	●	●		160	-30 +100°C	0.5
	68	80	●			500	-30 +100°C	0.5
	77	82	●	●		350	-30 +100°C	0.5

Guarnizioni pistone doppio effetto
Double Acting Piston Seals

Section	Hallite Type	Page	Metric	Inch	Profile	bar (0 100 200 300 400 500 600 700)	°C (-50 0 +50 +100 +150 +200)	m/s (0 1 2 3 4 5)
	714	137	●	●		500	-40 +110°C	2.0
	730	139	●			700	-40 +110°C	0.3
	735	143	●	●		500	-40 +120°C	1.5
	753	146	●		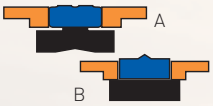 \	400	-30 +100°C	0.5
	754	149	●	●		350 500	-40 +110°C	1.0
	755	152		●		350	-40 +110°C	1.0
	764	153	●	●		250	-30 +110°C	1.0
	770	155		●		350	-40 +110°C	1.0
	775	156		●		350	-30 +110°C	1.0
	780	157	●			400	-30 +100°C	0.5

Guarnizioni pistone singolo effetto
Single Acting Piston Seals

Section	Hallite Type	Page	Metric	Inch	Profile	bar (0 100 200 300 400 500 600 700)	°C (-50 0 +50 +100 +150 +200)	m/s (0 1 2 3 4 5)
	606	114	●	●		400 700	-45 +110°C	1.0
	659	133	●	●		400 700*	-45 +110°C	1.0

Guarnizioni a pacco
Vee Packs

Section	Hallite Type	Page	Metric	Inch	Profile	bar	°C	m/s
Vee Pack Sets	07	30	●	●	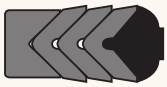	700	-30 +100°C	0.5
	09	32	●	●	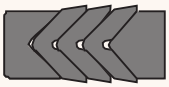	400	-30 +100°C	0.5
	11	34	●			400	-30 +100°C	0.5
	13	36	●			700	-30 +100°C	0.5
	14	38	●			700	-30 +100°C	0.5

Raschiatori
Wipers

Section	Hallite Type	Page	Metric	Inch	Profile	Notes	°C	m/s
Wipers	33	47	●	●	metric	I raschiatori Hallite 38 in poliestere può raschiare fino a 2 mm. di ghiaccio o concrezioni *Hallite wipers 38 can scrape until 2 mm.of ice or concretions*	-30 +100°C	4.0
	38	51	●				-40 +120°C	4.0
	335	89	●				-30 +100°C	5.0
	520	99		●	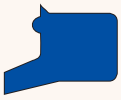		-45 +110°C	4.0

Raschiatori
Wipers

Section	Hallite Type	Page	Metric	Inch	Profile	Notes	°C	m/s
	831	164	●		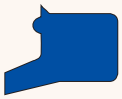	Hallite wipers 834,839 and 846 are produced in materials that are capable of operating at temperatures below 0 °C, but they are not designed to scrape ice.	-45 +110°C	4.0
	834	167	●				-45 +110°C	4.0
	839	170	●				-45 +110°C	4.0
	842	173	●	●			-45 +110°C	4.0
	844	177	●				-45 +110°C	4.0
	846	179	●				-45 +110°C	4.0
	860	181	●	●			-40 +100°C	1.0
	862	184		●			-40 +100°C	1.0
	864	185	●				-45 +110°C	1.0

Fasce guida
Guide bands

Section	Hallite Type	Page	Metric	Inch	Profile	Notes	°C	m/s
	87	85	●			Hallite 87, 506, 533 wear strip are also suitable for oscillating and rotary applications.	-50 +200°C	5.0
	506	91	●	●		Hallite 87 and 506 include cross sections that satisfy the requirements of ISO 10766.	-40 +120°C	5.0
	533	100		●		Hallite 506 is available in three different formats; spiral lengths, cut rings and flat coils, see the relevant data sheet for additional information.	-40 +120°C	5.0

Guarnizione per stelo rotante in pressione
Rotary pressure seals

Section	Hallite Type	Page	Metric	Inch	Profile	bar (0 100 200 300 400 500 600 700)	°C (-50 0 +50 +100 +150 +200)	m/s (0 1 2 3 4 5)
Swivels Seals	**80**	84	●			350	-30 +80°C	0.1
	310	87	●			300	-30 +100°C	0.5
	Ro 800	162	●			350	-30 +80°C	0.2

Guarnizioni per flange
Flange seals

Section	Hallite Type	Page	Metric	Inch	Profile	bar (0 100 200 300 400 500 600 700)	°C (-50 0 +50 +100 +150 +200)	m/s (0 1 2 3 4 5)
Additional Products	**657**	131	●	●		600	-40 +110°C	STATIC

Material name	Material group	Designation	Temperature range °C	Temperature range °F	Hardness	Colour	Rod
Nitrile – medium	Synthetic rubber	NBR	-30 +120	-22 +250	90 IRHD	Black	H
Nitrile – high	Synthetic rubber	NBR	-10 +140	-14 +284	80 IRHD	Black	P
Nitrile – low	Synthetic rubber	NBR	-45 +100	-45 +212	80 IRHD	Black	H
Nitrile – medium	Synthetic rubber	NBR	-30 +120	-22 +250	80 IRHD	Black	
Nitrile – medium	Synthetic rubber	NBR	-30 +120	-22 +250	75 IRHD	Black	H
Nitrile – medium	Synthetic rubber	NBR	-30 +120	-22 +250	73 IRHD	Black	H
Nitrile – medium	Synthetic rubber	NBR	-30 +120	-22 +250	70 IRHD	Black	H
Nitrile – low	Synthetic rubber	NBR	-45 +100	-45 +212	70 IRHD	Black	H
Nitrile – medium	Synthetic rubber	NBR	-30 +120	-22 +250	70 IRHD	Black	H
Hallprene – rubber / fabric	Composite	Cotton/ NBR	-30 +120	-22 +250		Black	H
Fluoroelastomer rubber / fabric	Composite	Cotton/ FKM	-20 +150	-4 +302		Black	H
Fluoroelastomer	Synthetic rubber	FKM	-20 +200	-4 +392	75 IRHD	Black	HP
Hythane® 181	TPE	EU	-45 +110	-50 +230	93 IRHD	Blue	HP
Hallite ® 361	TPE	AU	-30 +110	-22 +230	96 IRHD	Orange	H
Polyurethane	TPE	AU	-40 +100	-40 +212	94 IRHD	Dark blue	
Polyurethane	TPE	EU	-45 +110	-50 +230	93 IRHD	Dark blue	
Polyurethane	TPE	EU	-45 +110	-50 +230	93 IRHD	Black	H
Polyurethane	TPE	EU	-40 +100	-40 +212	55D	Green	
Standard polyester elastomer	TPE		-40 +120	-40 +250	55D	Red	
Hydrolysis stabilised polyester elastomer	TPE		-40 +120	-40 +250	55D	Grey	H
Hydrolysis stabilised polyester elastomer	TPE		-40 +140	-40 +284	72D	Dark Red	
Hydrolysis stabilised polyester elastomer	TPE		-30 +100	-22 +212	40D	Light grey	
Lubricated polyester elastomer	TPE		-40 +120	-40 +250	55D	Cream	
Acetal	Eng. plastic	POM	-45 +120	-50 +250	R115	Orange	H
PTFE glass filled	Eng. plastic	PTFE	-50 +200	-58 +392	60D	White	HP
PTFE glass / MoS_2 filled	Eng. plastic	PTFE	-50 +200	-58 +392	62D	Grey	H
PTFE Bronze filled	Eng. plastic	PTFE	-50 +200	-58 +392	65D	Bronze	H
PTFE Bronze filled	Eng. plastic	PTFE	-50 +200	-58 +392	72D	Bronze	
Hallite® 506 polyester /polyester	Composite		-40 +120	-40 +250		Red	
Nylon 12	Eng. plastic	PA	-40 +120	-40 +250	72D	Brown	
Nylon 6 / MoS_2	Eng. plastic	PA	-40 +120	-40 +250	R115	Black	
Glass filled Nylon	Eng. plastic	PA	-40 +120	-40 +250	R124	Black	

Piston	Wiper	Bearing		Products	Compound reference
	H			11, 12, 13, 14, Vee rings, 33	9000141
P	P			Special material option	9000041
				Special material option	9000471
H			M(1)	50, 53, 64, 65, 68, 77,730, 735, 753 Sealing elements	9001411
H				15	9000801
H				07, 18	9000271
H				16, 54, 754, 755, 770	9000771
H				Special material option 15, 18, 56, 58	9000211
				56, 58	9000111
H				07, 09, 11, 13, 14, 15, 18, 21, 51, 52, 56, 58	9400251
H				Special material option for standard rubber and rubber /fabric products. (Additional tooling may be required)	9400431
HP	HP			Special material option for standard rubber and rubber /fabric products. (Additional tooling may be required)	9020051
HP	HP		M	80, 601, 605, 606, 607, 609, 610, 616, 620 ,621, 652, 653, 656, 657, 658, 659, 834, 839, 842, 846	9220181
H	H			764, 775, 844, 864	9220361
	H			860, 862	9220321
	H			520, 831	9220251
H				511, 512,513	9220221
	H		M	Special material option 842	9220371
H	H			38, 754, 755	9270061
H			M	716, 730, 740 ,750	9270111
H				754, 755, 770	9270051
			M(1)	155	9270201
HP				754, 755, 770	9270261
H		HP	M	AE rings 621, Vee pack headers, Bearing rings 53, 58, 65, 68, 77	9230011
HP				16, 54	PTFE02
H	H			416, 454, 735	CDI702
H				16, 54, 416, 454, 735	CDI741
		H		87	9200031
		HP	M	506, 507	
H				Support rings 50, 53, 64, 68	9260041
H				AE rings735	CDI707
		H		533, 720	Dynamic 533

Key: H- Hydraulic P- Pneumatic M- Suitable for water based fluid (1)- Static applications only

Max. continuous working temperatures °C and temperature ranges for materials, within fluid power fluids

			Service Fluids								
			Fluids based on mineral oils				Greases		Fuels		
Material	Continuous material service temperature range °C	Intermittent material service temperature range °C	Motor oils	Hypoid gear oils	Automatic transmission fluid	ISO 6743-4 Hydraulic oils (HL, HM, HV)	Mineral oil based greases	Silicon based greases	Diesel fuel	Fuel for gasoline/petrol engines – normal	Fuel for gasoline/petrol engines – super
			+ 150 - 40	+ 150 - 40	+ 160 - 50	+ 100 - 30	+ 100 - 30	+ 250 - 50			
			Maximum continuous service temperature in fluids °C								
NBR 70 IRHD NBR 90 IRHD Nitrile (medium)	+ 100 - 30	+ 120 - 30	100	90	100	100	100	100	*	*	*
FKM 75 IRHD FKM 90 IRHD Fluoro-elastomer	+ 200 - 20	+ 250 - 20	150	150	160	100	100	200	150	150	150
EPDM 70 IRHD EPDM 80 IRHD	+ 120 - 50	+ 150 - 50	NS	NS	NS	NS	NS	120	NS	NS	NS
VMQ 70 IRHD Silicone	+ 200 - 55	+ 250 - 55	*	*	*	*	100	*	NS	NS	NS
HNBR 75 IRHD Hydrogenated nitrile	+ 130 - 30	+ 150 - 30	130	110	130	100	100	130	*	*	*
IIR Butyl	+ 120 - 40	+ 140 - 40	NS	NS	NS	NS	NS	120	NS	NS	NS
FFKM Perfluoro-elastomer	+300 +200 + 40 - 20		150	150	160	100	100	200	150	150	150
AU Polyester PU	+ 100 - 30	+ 110 - 30	100	100	100	100	100	100	60	60	60
EU Polyether PU	+ 100 - 40	+ 110 - 45	100	100	100	100	100	100	60	60	60
Polyester-Elastomer	+ 100 - 40	+ 120 - 40	100	100	100	100	100	100	60	60	60
PA Polyamide	+ 100 - 40	+ 120 - 40	100	100	100	100	100	100	100	100	100
POM Acetal	+ 100 - 45	+ 120 - 40	100	100	100	100	100	100	100	100	100
PPS Polyphenylene sulphide	+ 200 - 40	+ 200 - 40	150	150	160	100	100	200	150	150	150
PTFE Polytetra-fluoroethylene	+ 200 - 200	+ 200 - 200	150	150	160	100	100	200	150	150	150
Thermosetting polyester resin	+ 100 - 50	+ 130 - 200	100	100	100	100	100	100	100	100	100
PEEK Polyether-etherketone	+ 250 - 65	+ 300 - 65	150	150	160	100	100	250	150	150	150

Max. continuous working temperatures °C and temperature ranges for materials, within fluid power fluids

Service Fluids											
Fire-resistant hydraulic fluids					Environmentally acceptable fluids				Other service fluids		
ISO 6743-4 HFA-Fluids (5/95 waterbased)	ISO 6743-4 HFB-Fluids (60/40 invert emulsion)	ISO 6743-4 HFC-fluids (water glycol)	ISO 6743-4 HFDR-fluids (phosphate ester ALKYL (Aero))	ISO 6743-4 HFDR-Fluids (phosphate ester ARYL (ind.))	ISO 6743-4 HETG fluids (Vegetable oil based)	ISO 6743-4 HEES fluids (Synthetic ester based)	ISO 6743-4 HEPG fluids (Synthetic glycol based)	ISO 6743-4 HEPR fluids (Synthetic hydrocarbons)	Water (1)	Air	Brake fluids
+ 60 + 5	+ 60 + 5	+ 60 - 30	+ 100 - 50	+ 150 - 0	+ 60 - 10	+ 100 - 40	+ 100 - 50	+ 150 - 50	+ 60 - 5	+ 200 + 2	+ 130 - 50
Maximum continuous service temperature in fluids °C											
60	60	60	NS	NS	60	60	60	100	80	100	NS
60	60	NS	NS	150	60	100	80	150	100	200	NS
NS	NS	60	80	80	NS	NS	NS	NS	120	120	120
NS	NS	NS	NS	NS	NS	NS	NS	*	100	200	80
60	60	60	NS	NS	60	60	80	130	130	130	NS
NS	NS	60	100	120	NS	NS	NS	NS	120	120	80
60	60	60	100	150	60	100	100	150	150	200	130
40	40	NS	NS	NS	60	60	60	100	40	40	NS
60	60	40	NS	NS	60	80	60	100	60	80	NS
60	60	NS	NS	NS	60	80	60	100	60	80	NS
60	60	60	100	100	60	100	100	100	60	80	80
60	60	60	100	100	60	100	100	100	80	80	80
60	60	60	100	150	60	100	100	150	150	200	130
60	60	60	100	150	60	100	100	150	150	200	130
60	60	40	100	100	60	100	100	100	80	100	NS
60	60	60	100	150	60	100	100	150	150	200	130

D = Dynamic Application, S = Static Application
R = Recommended, P = Possible , NS = Not Suitable

Product	Fluids Based on Mineral Oil		Water Based Fluids								Other Fluid Types					
			HFA (5/95)		HFB (60/40 invert emulsion)		HFC (water glycol)		Water		HFD (Phosphate ester Aryl type)		Synthetic esters (HEES, HFDU)		Air/Nitrogen	
	D	S	D	S	D	S	D	S	D	S	D	S	D	S	D	S
Rod Seal																
16	R	P	P	P	P	P	P	P	P	P	R[1]	P[1]	R	P	P	NS
605, 610, 616	R	R	P	P	R	R	P	P	P	P	NS	NS	R	P	P	P
621, 652	R	R	R	R	R	R	P	P	P	P	NS	NS	R	P	P	P
653	R	NS	NS	NS	NS	NS	NS	NS	NS	NS	NS	NS	P	NS	NS	NS
Rod/Piston seals																
15, 18	R	R	P	R	R	R	R	R	P	R	P[2]	P[2]	P	P	P	P
511, 512, 513	R	R	P	P	P	P	P	P	P	P	NS	NS	R	R	P	P
601	R	R	P	R	R	R	P	P	P	P	NS	NS	R	R	P	P
DA Piston seals																
50, 53, 64, 68	R	R	P	R	R	R	P[3]	P[3]	P	R	NS	NS	P	P	NS	P
51, 52, 56, 58	R	R	P	R	R	R	R	R	P	P	P[2]	P[2]	P	P	NS	P
54	R	P	P	R	P	P	P	P	P	P	R[1]	P[1]	R	P	P	NS
65, 77	R	R	P	R	R	R	R	R	P	P	NS	NS	P	P	NS	P
714	R	NS	NS	NS	NS	NS	NS	NS	NS	NS	P[1]	NS	R	NS	NS	NS
730	R	R	R	R	R	R	NS	NS	P	P	NS	NS	R	P	NS	P
735	R	P	NS	NS	P	P	P	P	NS	NS	NS	NS	R	P	NS	NS
753	R	R	NS	NS	NS	NS	NS	NS	NS	NS	NS	NS	R	P	NS	NS
754, 755	R	R	P	R	P	R	NS	NS	P	P	NS	NS	R	R	P	P
764	R	R	NS	NS	NS	NS	NS	NS	NS	NS	NS	NS	R	R	P	P
770	R	R	P	P	P	P	NS	NS	P	P	NS	NS	R	R	P	P
SA Piston Seals																
606, 659	R	R	P	P	R	R	P	P	P	P	NS	NS	R	P	P	P
Unitised Piston																
720	R	P	NS	NS	NS	NS	NS	NS	NS	NS	P[4]	P[4]	R	P	NS	NS
Vee Packs																
07, 09, 11, 13, 14	R	P	P	P	R	P	R	P	P	P	P[2]	P[2]	P	P	NS	NS

1 Suitable energiser material required e.g. FKM,EPDM. N.B. NBR unsuitable.
2 Suitable compounds required e.g FKM,EP. N.B. NBR unsuitable.
3 Use PA backing rings, not polyester.
4 Suitable seal set required.

In view of the variation in formulation of oils and other hydraulic fluids, the compatibility of all combinations should be confirmed by testing and field service performance for each application.

Our quality control methods for material and manufacturing processes ensure that all seals leaving our factories are in a condition capable of giving a long and reliable service life.

We have found from many years experience, that premature seal failure can be avoided if the following recommendations are considered at the design and manufacturing stage of the cylinder:

1 Specify piston and gland bearings which are adequately proportioned to support the cylinder loads.

As a result of mounting misalignments and / or the working action of the cylinder, piston and gland bearings will be subjected to side-loading, causing damage to the rod or the tube surface and hence the seal, if the bearings are inadequate.

2 Ensure that seals are stored distortion free in a cool, dry and dark place prior to fitting.(See Storage of seals).

3 Check that the seal housing is free from damage likely to harm the seal.

Remove all sharp edges and burrs from metal parts, paying particular attention to ports, grooves and threads over or through which the seal passes during assembly.

4 Clean all seal housing areas, ensuring that all metallic particles and other contaminants have been removed. Check that other surfaces adjacent to the passage of the seal on fitting are also free of dirt, swarf or other contaminants. Check that both static and dynamic housing surface finishes meet specifications.

5 Where the difference between a thread diameter over which the seal must pass and the seal diameter is small, use some form of protection over the thread, such as a fitting sleeve made of hard plastic.

6 Check that the seal is of the correct type, part number and size, and that the specified material is correct. If there is any doubt regarding the material contact your local Hallite sales office.

7 Lubricate all seals and metal components liberally with clean operating fluid or a compatible grease prior to assembly. N.B. Silicone grease should not be used in normal hydraulic applications.

8 Where seals fitted to sub-assemblies, such as pistons, are awaiting further fitting operations, ensure that the seals are not subjected to any misaligned or localised loading which will cause local deformation. Ensure that sub-assemblies remain clean.

9 The use of metal levers is not recommended but should they be used it is imperative that they are completely smooth and free from nicks and burrs. When using them ensure that the metal surfaces adjacent to the seal are not damaged.

10 Flush the hydraulic system thoroughly before connecting the cylinder to it.

Typical hydraulic cylinder layout showing installation features to be considered for satisfactory seal life.

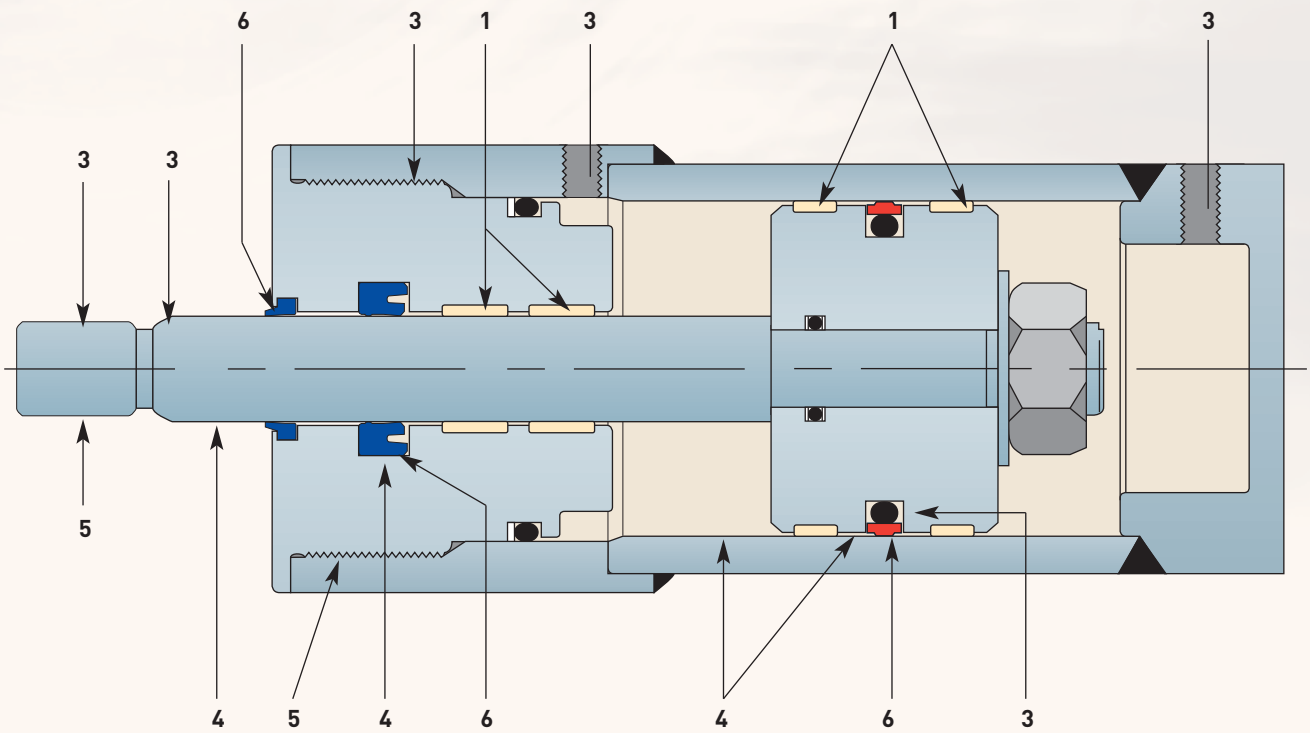

Cylinder specification		Light duty	Medium duty	Heavy duty
Pressure	**Max** **Normal** **Working**	350 bar 5000 psi 160 bar 2300 psi No Pressure Peaks	500 bar 7500 psi 250 bar 3600 psi Intermittent Pressure Peaks	700 bar 10000 psi 400 bar 6000 psi Regular Pressure Peaks
Design		Lower operating stresses Rigid well aligned mounting, minimal side loading.	Steady operating stresses with intermittent high stress, some side loading.	Highly stressed for majority of its working life. Side loading common.
Condition of Fluid		Good system filtration no cylinder contamination likely.	Good system filtration but some cylinder contamination likely.	Contamination unavoidable from internal and external sources.
Working Environment		Clean and inside a building. Operating temperature variations limited.	Mixture of indoor and outdoors but some protection from the weather.	Outdoors all the time or a dirty indoor area. Wide variations in temperature, both ambient and working. Difficult service conditions.
Usage		Irregular with short section of stroke at working pressures. Regular usage but at low pressure.	Regular usage with most of the stroke at working pressure.	Large amount of usage at high pressure with peaks throughout the stroke.
Typical Applications		Machine tools Lifting equipment Mechanical handling Injection moulding machines Control and robot equipment Agricultural machinery Packaging equipment Aircraft equipment Light duty tippers	Heavy duty lifting equipment Agricultural equipment Light duty off-road vehicles Cranes and lifing platforms Heavy duty machine tool Injection moulding machines some Auxiliary mining machinery Aircraft equipment Presses Heavy duty tippers (telescopic) Heavy duty mechanical handling	Foundry and metal fabrication plant Mining machinery Roof supports Heavy duty earth moving machinery Heavy duty off-road vehicles Heavy duty presses

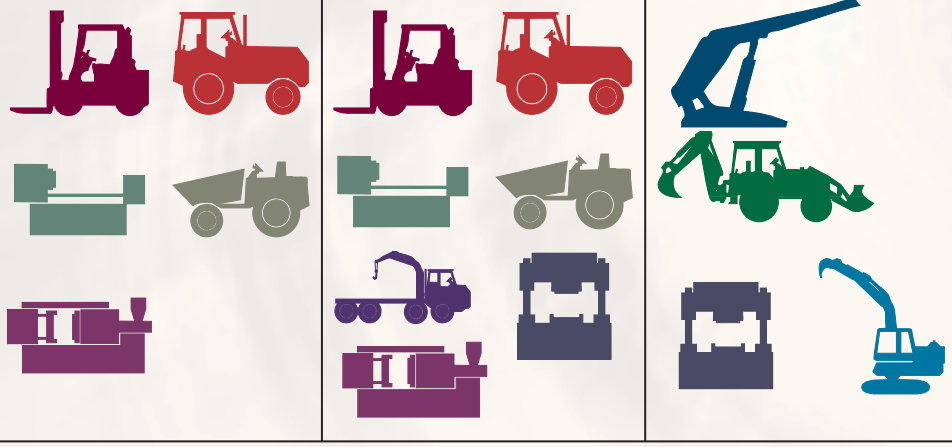

Pressure, Speed, Temperature Range

From many years of application experience with sealing hydraulic equipment, supported by the results from an extensive test programme, we know that it is necessary to link the three main operating features of speed, pressure, and temperature to achieve a satisfactory seal performance. After carefully considering each product we are able to specify the maximum speed and pressure with a temperature range within which the seal will operate safely.

If your operating conditions do not comply with those recommended please send your details to your local Hallite sales office.

Cylinder housings and seal options

The following diagrams illustrate how Hallite's wide range of products can be applied to a selection of some of the most popular cylinder designs servicing the world's fluid power industry.

The diagrams show different gland and piston arrangements to illustrate alternative sealing methods currently in use and a suitable Hallite product.

If the application which you are interested in is of a non-standard nature please contact Hallite's technical department.

Gland		Piston
Heavy duty Type 13, 14	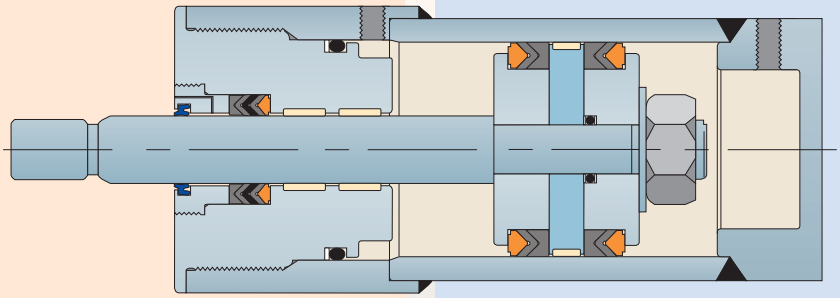	Heavy duty Type 51, 52
Heavy duty Type 18	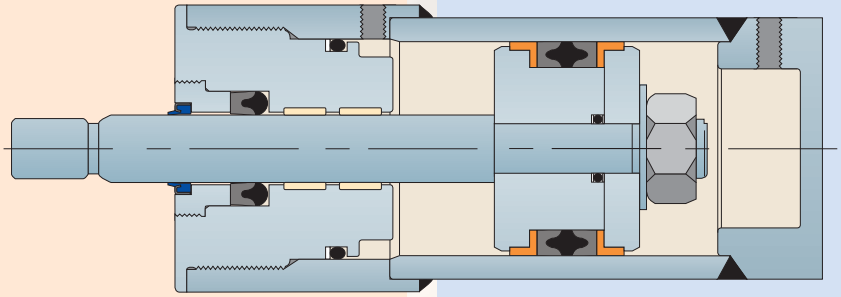	Heavy duty Type 58
Heavy duty Type 621, 652, 653	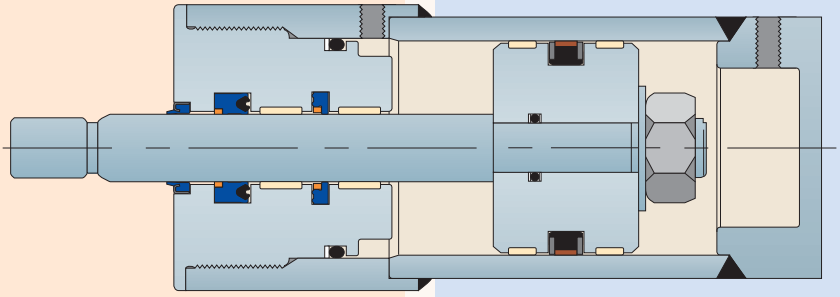	Heavy duty Type 730, 735
Medium duty Type 601, 605	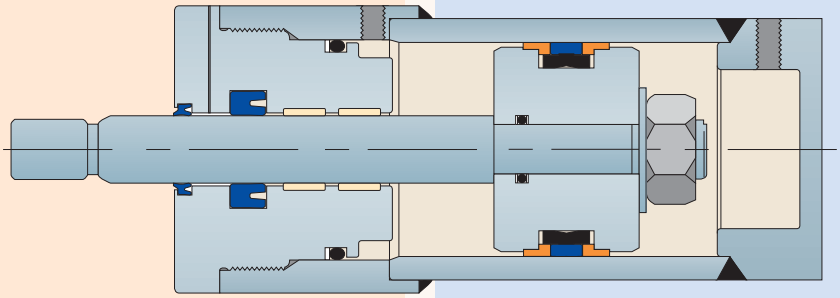	Medium duty Type 753

Gland		Piston
Medium duty Type 601, 605	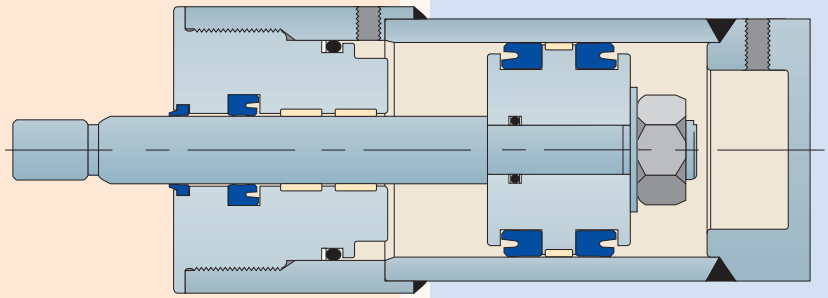	Medium duty Type 606
Medium duty Type 605	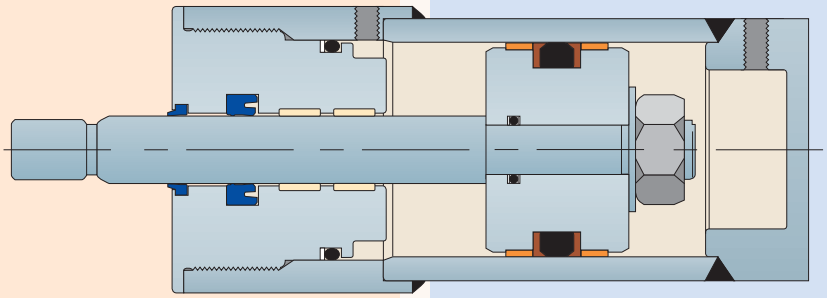	Medium duty Type 53
Medium duty Type 513	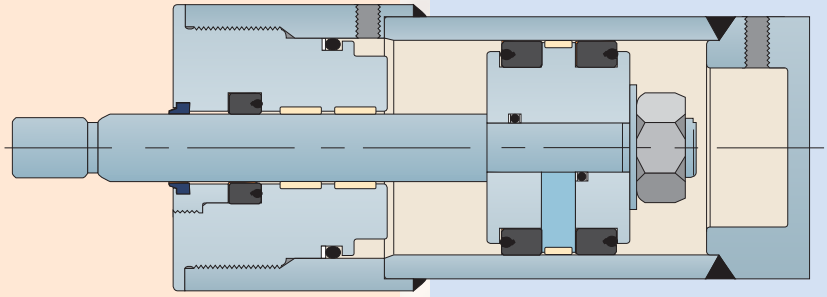	Medium duty Type 511, 512
Light to Medium duty Type 616, 16	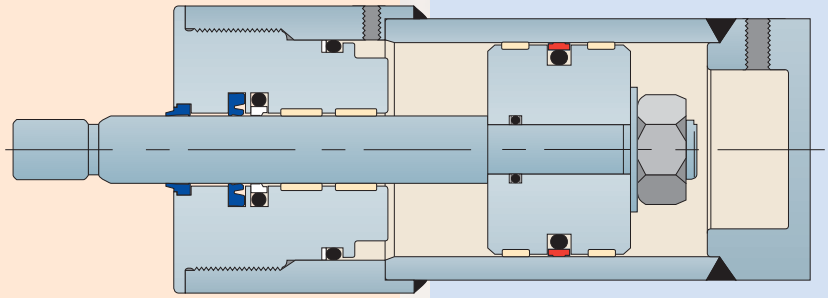	Light to Medium duty Type 754, 755 770
High speed light duty Type 16	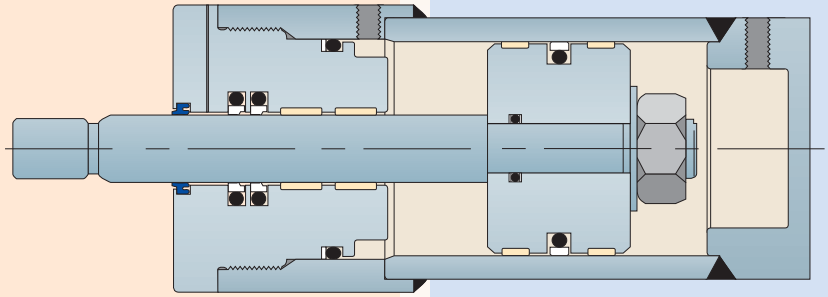	High speed light duty Type 54

Hallite 87, 506 & 533 bearing strip

Hallite 87 strip is a low friction bronze filled PTFE compound produced in a flat tape style ready for easy cutting to size to suit individual applications and is particularly effective in friction conscious applications such as servo cylinders.

Hallite 506 can be supplied in spiral lengths, generally in 10 metre, as individual cut bearings and also in 10 metre lengths packed flat in a box dispenser. Hallite 506 bearing strip is manufactured to extremely accurate thickness tolerances, ensuring reliable cylinder alignment. Other sizes of type 506 are available on request, special sections and diameters can also be produced to suit individual requirements.

Bearing Type	Standard material
87	PTFE + Bronze
506	Polyester + PTFE
533	GFN

Bearing strip housing tolerances

As tolerances are not specified "on line" for types 87 & 506, please refer to the information below and on the next page for tolerances as indicated on the product's data sheet.

Compressive bearing stress versus strain for non metallic materials

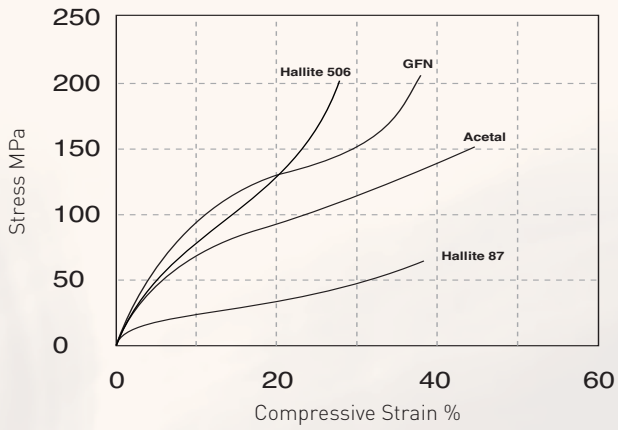

Hallite 506 specified tolerances

	Bearing length L_1	Bearing cross section S
Tolerances (in)	-0.005 to -0.025	-0.001 to -0.003

Hallite 506 specified tolerances

	Bearing length L_1	Bearing cross section S
Tolerances (mm)	-0.1 to -0.6	-0.02 to -0.08

Hallite 533 specified tolerances

	Bearing length L_1	Bearing cross section S
Tolerances (in.)	-0.000 to -0.010	-0.001 to -0.004

Hallite 87 specified tolerances

	Bearing length L_1	Bearing cross section S
Tolerances (mm)	-0.1 to -0.5	+0.03 to -0.05

Specified tolerances

Nominal sizes mm		Shafts (outside diameter) Units 0.001 mm								Bores (inside diameter) Units 0.001 mm				
over	to	f8	f9	h8	h9	h10	h11	js10	js11	H8	H9	H10	H11	Js11
1.6	3	-6 -20	-6 -31	0 -14	0 -25	0 -40	0 -60	+20 -20	+30 -30	+14 0	+25 0	+40 0	+60 0	+30 -30
3	6	-10 -28	-10 -40	0 -18	0 -30	0 -48	0 -75	+24 -24	+37.5 -37.5	+18 0	+30 0	+48 0	+75 0	+37.5 -37.5
6	10	-13 -35	-13 -49	0 -22	0 -36	0 -58	0 -90	+29 -29	+45 -45	+22 0	+36 0	+58 0	+90 0	+45 -45
10	18	-16 -43	-16 -59	0 -27	0 -43	0 -70	0 -110	+35 -35	+55 -55	+27 0	+43 0	+70 0	+110 0	+55 -55
18	30	-20 -53	-20 -72	0 -33	0 -52	0 -84	0 -130	+42 -42	+65 -65	+33 0	+52 0	+84 0	+130 0	+65 -65
30	50	-25 -64	-25 -87	0 -39	0 -62	0 -100	0 -160	+50 -50	+80 -80	+39 0	+62 0	+100 0	+160 0	+80 -80
50	80	-30 -76	-30 -104	0 -46	0 -74	0 -120	0 -190	+60 -60	+95 -95	+46 0	+74 0	+120 0	+190 0	+95 -95
80	120	-36 -90	-36 -123	0 -54	0 -87	0 -140	0 -220	+70 -70	+110 -110	+54 0	+87 0	+140 0	+220 0	+110 -110
120	180	-43 -106	-43 -143	0 -63	0 -100	0 -160	0 -250	+80 -80	+125 -125	+63 0	+100 0	+160 0	+250 0	+125 -125
180	250	-50 -122	-50 -165	0 -72	0 -115	0 -185	0 -290	+92 -92	+145 -145	+72 0	+115 0	+185 0	+290 0	+145 -145
250	315	-56 -137	-56 -186	0 -81	0 -130	0 -210	0 -320	+105 -105	+160 -160	+81 0	+130 0	+210 0	+320 0	+160 -160
315	400	-62 -151	-62 -202	0 -89	0 -140	0 -230	0 -360	+115 -115	+180 -180	+89 0	+140 0	+230 0	+360 0	+180 -180
400	500	-68 -165	-68 -223	0 -97	0 -155	0 -250	0 -400	+125 -125	+200 -200	+97 0	+155 0	+250 0	+400 0	+200 -200
500	630	-76 -186	-76 -251	0 -110	0 -175	0 -280	0 -440	+140 -140	+220 -220	+110 0	+175 0	+280 0	+440 0	+220 -220
630	800	-80 -205	-80 -280	0 -125	0 -200	0 -320	0 -500	+160 -160	+250 -250	+125 0	+200 0	+320 0	+500 0	+250 -250

Nominal sizes in.		Shafts (outside diameter) Units 0.001 in.								Bores (inside diameter) Units 0.001 in.				
over	to	f8	f9	h8	h9	h10	h11	js10	js11	H8	H9	H10	H11	Js11
0.04	0.12	-0.3 -0.9	-0.3 -1.2	0 -0.6	0 -1.0	0 -1.6	0 -2.5	+0.8 -0.8	+1.3 -1.3	+0.6 0	+1.0 0	+1.6 0	+2.5 0	+1.3 -1.3
0.12	0.24	-0.4 -1.1	-0.4 -1.6	0 -0.7	0 -1.2	0 -1.8	0 -3.0	+0.9 -0.9	+1.5 -1.5	+0.7 0	+1.2 0	+1.8 0	+3.0 0	+1.5 -1.5
0.24	0.40	-0.5 -1.4	-0.5 -1.9	0 -0.9	0 -1.4	0 -2.2	0 -3.5	+1.1 -1.1	+1.8 -1.8	+0.9 0	+1.4 0	+2.2 0	+3.5 0	+1.8 -1.8
0.40	0.71	-0.6 -1.6	-0.6 -2.3	0 -1.0	0 -1.6	0 -2.8	0 -4.0	+1.4 -1.4	+2.0 -2.0	+1.0 0	+1.6 0	+2.8 0	+4.0 0	+2.0 -2.0
0.71	1.19	-0.8 -2.0	-0.8 -2.8	0 -1.2	0 -2.0	0 -3.5	0 -5.0	+1.8 -1.8	+2.5 -2.5	+1.2 0	+2.0 0	+3.5 0	+5.0 0	+2.5 -2.5
1.19	1.97	-1.0 -2.6	-1.0 -3.4	0 -1.6	0 -2.5	0 -4.0	0 -6.0	+2.0 -2.0	+3.0 -3.0	+1.6 0	+2.5 0	+4.0 0	+6.0 0	+3.0 -3.0
1.97	3.15	-1.2 -3.0	-1.2 -4.1	0 -1.8	0 -3.0	0 -4.5	0 -7.0	+2.3 -2.3	+3.5 -3.5	+1.8 0	+3.0 0	+4.5 0	+7.0 0	+3.5 -3.5
3.15	4.73	-1.4 -3.6	-1.4 -4.8	0 -2.2	0 -3.5	0 -5.0	0 -9.0	+2.5 -2.5	+4.5 -4.5	+2.2 0	+3.5 0	+5.0 0	+9.0 0	+4.5 -4.5
4.73	7.09	-1.6 -4.1	-1.6 -5.6	0 -2.5	0 -4.0	0 -6.0	0 -10.0	+3.0 -3.0	+5.0 -5.0	+2.5 0	+4.0 0	+6.0 0	+10.0 0	+5.0 -5.0
7.09	9.85	-2.0 -4.8	-2.0 -6.5	0 -2.8	0 -4.5	0 -7.0	0 -12.0	+3.5 -3.5	+6.0 -6.0	+2.8 0	+4.5 0	+7.0 0	+12.0 0	+6.0 -6.0
9.85	12.41	-2.2 -5.2	-2.2 -7.3	0 -3.0	0 -5	0 -8.0	0 -12.0	+4.0 -4.0	+6.0 -6.0	+3.0 0	+5.0 0	+8.0 0	+13.0 0	+6.5 -6.5
12.41	15.75	-2.5 -6.0	-2.5 -8.0	0 -3.5	0 -6.0	0 -9.0	0 -14.0	+4.5 -4.5	+7.0 -7.0	+3.5 0	+6.0 0	+9.0 0	+14.0 0	+7.0 -7.0
15.75	19.69	-2.8 -6.5	-2.8 -8.8	0 -4.0	0 -6.0	0 -10.0	0 -16.0	+5.0 -5.0	+8.0 -8.0	+4.0 0	+6.0 0	+10.0 0	+16.0 0	+8.0 -8.0
19.69	24.80	-3.0 -7.0	-3.0 -9.9	0 -4.3	0 -6.9	0 -11.0	0 -17.3	+5.5 -5.5	+8.7 -8.7	+4.3 0	+6.9 0	+11.0 0	+17.3 0	+8.7 -8.7
24.80	31.49	-3.1 -8.1	-3.1 -11.0	0 -4.9	0 -7.9	0 -12.6	0 -19.7	+6.3 -6.3	+9.8 -9.8	+4.9 0	+7.9 0	+12.6 0	+19.7 0	+9.8 -9.8

Tolorances extracted from BS 1916 &BS 4500 (ISO 286) with kind permission of British Standards Institution

Hallite Seals' product data sheets give information indicating the allowable extrusion gap a seal can see at pressure during its working life. The extrusion gap can be calculated using the tolerance build ups within the cylinder and any dilation that may occur under pressure.

Maximum extrusion gap = F max (see drawing below).

F max is the maximum extrusion gap for the seal

Minimum metal to metal clearance = F min (see drawing below).

F min for cylinders with minimal side loading should be > 0.1mm (0.004").

Rods

Maximum extrusion gap

$$F\ max = \frac{(ØD3\ max + ØD2\ max)}{2} - S\ min - Ød1\ min$$

Minimum metal to metal clearance (extrusion gap)

$$F\ min = S\ min - \frac{(ØD2\ max - ØD3\ min)}{2}$$

Rod Bearing

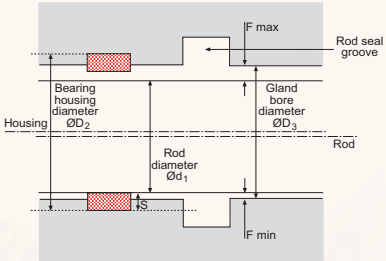

Note: Rod is not concentric with gland, because of clearances. (shown exaggerated)

Piston Bearing

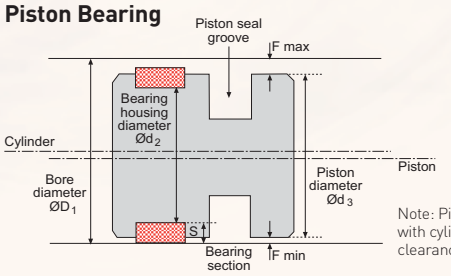

Note: Piston is not concentric with cylinder bore, because of clearances. (shown exaggerated)

Pistons

Maximum extrusion gap

$$F\ max = ØD1\ max - S\ min - \frac{(Ød3\ min + Ød2\ min)}{2} + dilation$$

Minimum metal to metal clearance (extrusion gap)

$$F\ min = S\ min - \frac{(Ød3\ max - Ød2\ min)}{2}$$

Calculate both F max and F min.

Ensure the F min is greater than 0.1mm (0.004") and F max is less than the maximum extrusion gap stated on the seal data sheet at the application's working pressure.

For built-in metal bearings, the extrusion gap calculation is simpler.

For F max:
Rod = ØD3 max - Ød1 min
Piston = ØD1 max - Ød3 min + dilation

F min must be zero

Extrusion is closely linked to pressure and temperature. In general, the best seal performance and life is provided by specifying the smallest possible extrusion gap.

The figures shown for the extrusion gap within the operating conditions of Hallite's product data sheets, relate to the maximum permissible, worst case situation with the gap all on one side.

Type 735, 754, 755

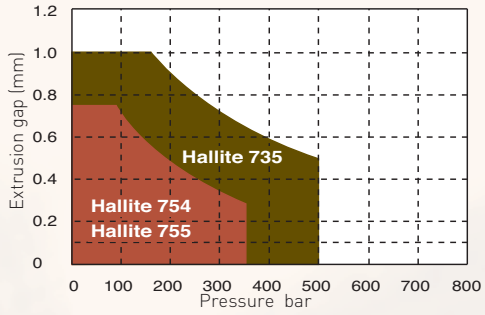

Type 15, 16, 18

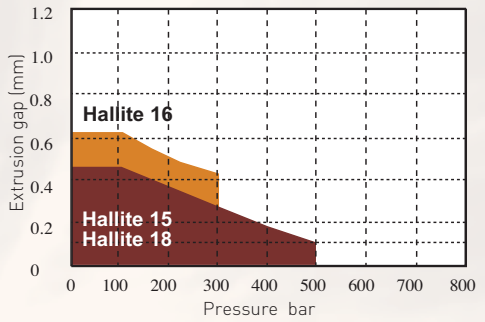

Type 601, 605, 606, 610, 621, 652, 659

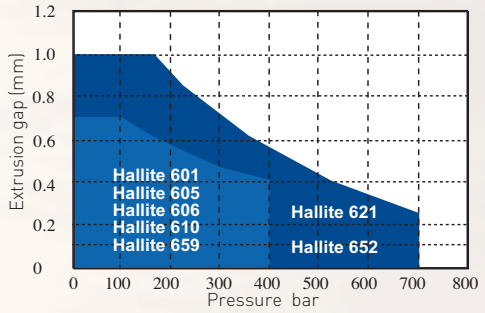

Vee pack sets

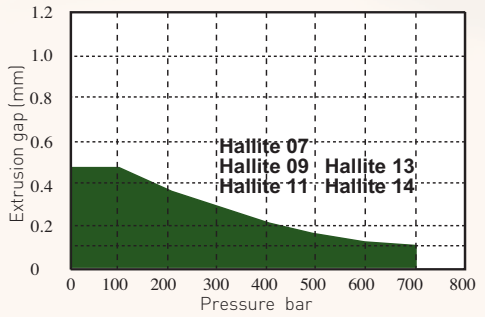

Extrusion gaps and metal-to-metal clearance

The use of remote bearing strips, such as Hallite 506, often creates a conflict between maximising the metal-to-metal clearance, to avoid metal-to-metal contact, and minimising the extrusion gap for the seal. The design decisions that have to be made in this respect are not trivial. The following examples show the effects of looser and tighter tolerances on the minimum metal-to-metal clearance and the maximum extrusion gap. The values have been calculated using the housing design formulae. No allowance has been made for the deflection of the bearings under side load, and, in the case of the piston examples, for the cylinder dilation.

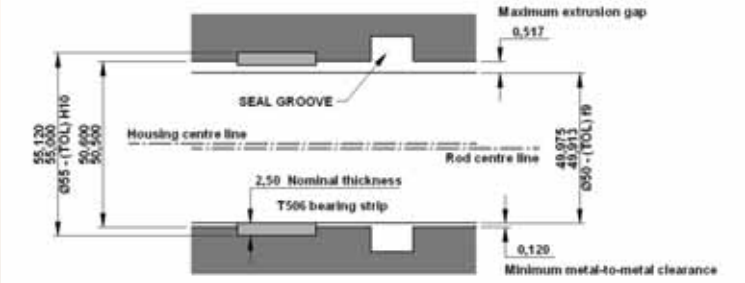

Gland for 50mm rod using 'standard' tolerances

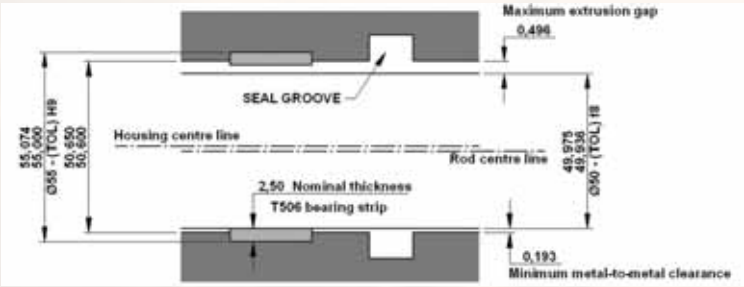

Gland for 50mm rod with tighter tolerances, showing that the minimum metal-to-metal clearances can be increased and the maximum extrusion gap reduced.

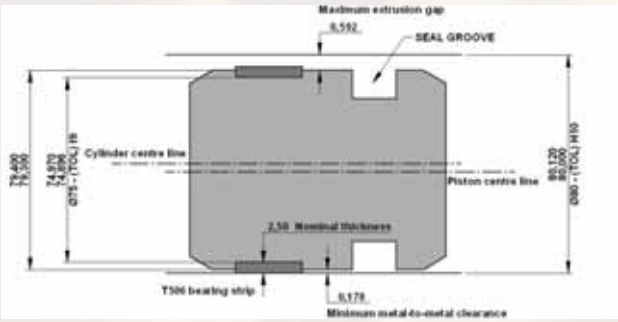

Piston for 80mm bore using 'standard' tolerances

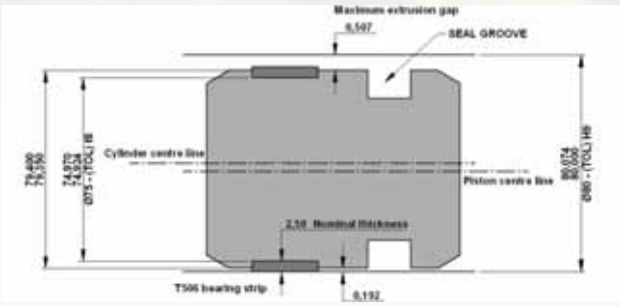

Piston for 80mm bore with tighter tolerances showing that minimum metal-to-metal clearance can be increased and maximum extrusion gap reduced.

Once the maximum extrusion gap has been calculated the correct seal can be specified with regard to the required operating pressure of the cylinder.

For further advice, please contact Hallite Seals.

Surface roughness has a very important influence on the life and leakage performance of a reciprocating sealing system.

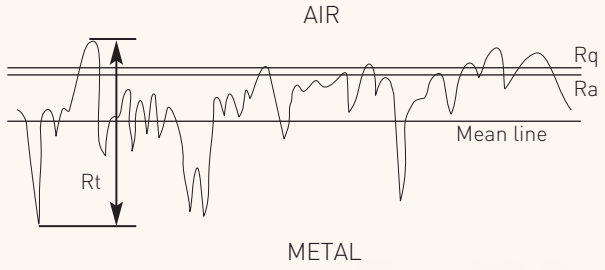

Note : The vertical scale is 40 times the horizontal scale

Definitions

Many parameters can be used to describe surface finishes and these are explained in ISO 4287 and ISO 4288. Those in most common use in the fluid power industry include:-

Ra, which is defined as the arithmetical mean deviation of the assessed profile. The inch equivalent parameter is CLA (centre line average). A surface finish of 0.4 µm Ra is exactly equivalent to 16 µin CLA.

Rt, which is the total height of the profile.There is no mathematical relationship between Ra and Rt.

Rq, which is the root mean square deviation of the assessed profile. The equivalent term in inches is RMS (Root Mean Square). The Rq (RMS) of a surface is approximately 10% greater than the Ra (CLA) value.

The surface roughness parameters given above do not give any indication of the sharpness of the surface. The peaks of the profile should be well rounded as sharp surface finishes can lead to rapid seal wear.

Dynamic surface finishes

Piston rods are generally hard chrome plated. The hardness should be at least 67 Rockwell C. This gives an excellent tribological surface and provided the rods are produced by an established supplier within a surface finish range of 0.1 to 0.3 µm Ra (4-12 µin CLA) no major problem should ensue, although the optimum surface finish may well depend on the seal material.

Bore surface finishes can be more problematic.
The typical methods of obtaining a bore finish are summarised in the figure below. Drawn over mandrel (DOM) tubing, as is, can be adequate, or a potential disaster depending on the actual surface texture achieved and the application. Increasing use is being made of Special Smooth Inside Diameter (SSID) DOM tubing, but in certain circumstances, mainly when the seal is being driven into the pressure, it can lead to wear of the seal through flow erosion. Such DOM tubing requires careful specification. The consistency of roller burnished or honed tube is to be preferred. Skived and roller burnished tubing is very smooth (less than 0.1µm Ra) (4 µin CLA) and may be too smooth for rubber sealing elements in some applications. True honed tube, produced between (0.1 and 0.4 µm Ra) (4-16 µin CLA) is the most expensive, but has the best finish.

Static surface finishes

The static sealing surface finish must not be ignored in the control of leakage. Generally, these are fine turned and should be free from chatter marks.

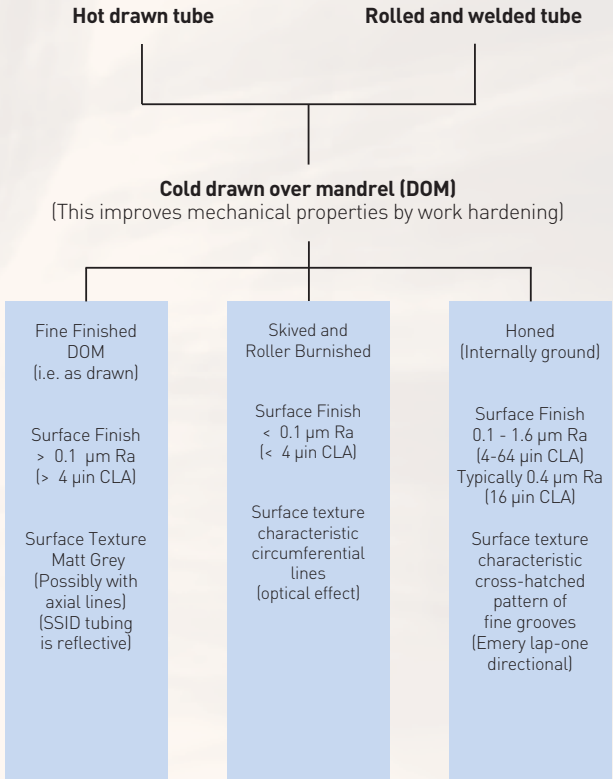

Methods of manufacturing of tubes for hydraulic cylinders and resulting surface textures.

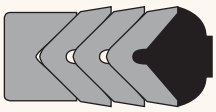

07

Technical details

	Metric		Inch	
Operating conditions				
Maximum Speed	0.5 m/sec		1.5 ft/sec	
Temperature Range	-30°C +100°C		-22°F +212°F	
Maximum Pressure	700 bar		10,000 p.s.i.	
Maximum extrusion gap	**Figures show the maximum permissible gap all on one side using minimum rod Ø and maximum clearance Ø. Refer to Housing Design section.**			
Pressure bar	160	250	400	700
Maximum Gap mm	0.4	0.3	0.2	0.1
Pressure p.s.i.	2400	3750	6000	10,000
Maximum Gap in	0.016	0.012	0.008	0.004
Surface roughness	µmRa	µmRt	µinCLA	µinRMS
Dynamic Sealing Face $Ød_1$	0.1 <> 0.4	4 max	4 <> 16	5 <> 18
Static Sealing Face $ØD_1$	1.6 max	10 max	63 max	70 max
Static Housing Faces L_1	3.2 max	16 max	125 max	140 max
Chamfers & Radii				
Groove Section ≤ S mm	7.5	10.0	12.5	15.0
Min Chamfer C mm	4.0	5.0	6.5	7.5
Max Fillet Rad r_1 mm	0.8	0.8	0.8	1.6
Groove Section ≤ S in	0.250	0.312	0.375	0.500
Min Chamfer C in	0.125	0.156	0.187	0.250
Max Fillet Rad r_2 in	0.031	0.031	0.031	0.031
Tolerances	$Ød_1$	$ØD_1$	L_1 mm	L_1 in
	f9	Js11	+0.25 -0	+0.010 -0

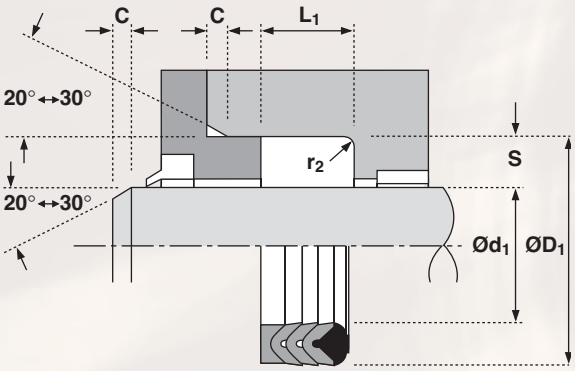

Design

The Hallite 07 is a multi lip rod seal, for medium to heavy duty applications, composed of a header ring, vee rings and a female adaptor.

The header ring is the primary seal. It is a bonded construction of a rubberised fabric vee ring and rubber. When installed the section is pre-loaded to seal at low pressure but has the strength and durability of the fabric to operate at higher pressures. Rubberised fabric is also used for the vee rings. These provide secondary sealing as pressure acting on the header ring spreads the vee rings increasing the sealing area. The female adaptor provides the support and protection from extrusion damage. It is manufactured in either polyacetal or hard rubberised fabric. The assembly is a pressure activated packing that does not require any axial pre-load.

The range has a header ring, a female adaptor and 2 vee rings. Other sizes and constructions are available on request.

Features

- **Effective Dri-Rod seal under both low and high pressure conditions**
- **Precision moulded vee rings**
- **Pressure activated**
- **No adjustment necessary**

07

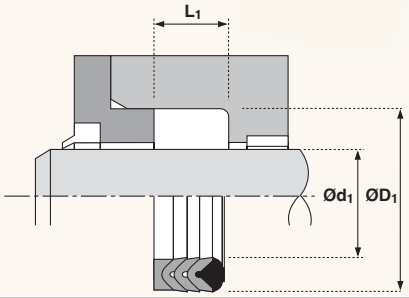

Ød1	TOL f9	ØD1	TOL Js11	L1 +0.25-0	PART No.
25	-0.020 -0.072	40	+0.08 -0.08	22.50	6630720
30	-0.020 -0.072	45	+0.08 -0.08	22.50	0400820
32	-0.025 -0.087	47	+0.08 -0.08	22.50	6630820
35	-0.025 -0.087	50	+0.08 -0.08	22.50	0339520
40	-0.025 -0.087	55	+0.10 -0.10	22.50	6532620
45	-0.025 -0.087	60	+0.10 -0.10	22.50	0385020
50	-0.025 -0.087	70	+0.10 -0.10	30.00	6631020
55	-0.030 -0.104	75	+0.10 -0.10	30.00	6631120
56	-0.030 -0.104	76	+0.10 -0.10	30.00	0338220
60	-0.030 -0.104	80	+0.10 -0.10	30.00	0892520
63	-0.030 -0.104	83	+0.11 -0.11	30.00	0467120
65	-0.030 -0.104	85	+0.11 -0.11	30.00	0467720
70	-0.030 -0.104	90	+0.11 -0.11	30.00	6631220
75	-0.030 -0.104	95	+0.11 -0.11	30.00	0446620

Ød1	TOL f9	ØD1	TOL Js11	L1 +0.25-0	PART No.
80	-0.030 -0.104	100	+0.11 -0.11	30.00	6631320
85	-0.036 -0.123	105	+0.11 -0.11	30.00	6631420
90	-0.036 -0.123	110	+0.11 -0.11	30.00	6631520
100	-0.036 -0.123	120	+0.11 -0.11	30.00	6631620
110	-0.036 -0.123	130	+0.13 -0.13	30.00	0308420
125	-0.043 -0.143	140	+0.13 -0.13	22.50	1362820
125	-0.043 -0.143	145	+0.13 -0.13	30.00	2179620
125	-0.043 -0.143	150	+0.13 -0.13	37.00	1365620
140	-0.043 -0.143	160	+0.13 -0.13	30.00	1272320
180	-0.043 -0.143	210	+0.15 -0.15	47.00	0090320
200	-0.050 -0.165	230	+0.15 -0.15	45.00	1282720

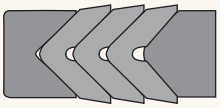

09

Technical details

	Metric			Inch
Operating conditions				
Maximum Speed	0.5 m/sec			1.5 ft/sec
Temperature Range	-30°C +100°C			-22°F +212°F
Maximum Pressure	400 bar			6000 p.s.i.

Maximum extrusion gap — **Figures show the maximum permissible gap all on one side, for rod seals using minimum rod Ø and maximum clearance Ø and for piston seals using the minimum clearance Ø and maximum bore Ø. Refer to Housing Design section.**

Pressure bar	100	175	250	400
Maximum Gap mm	0.45	0.4	0.3	0.2
Pressure p.s.i.	1500	2250	3500	6000
Maximum Gap in	0.018	0.015	0.010	0.007

Surface roughness	µmRa	µmRt	µinCLA	µinRMS
Dynamic Sealing Face – Rod Ød$_1$	0.1 <> 0.4	4 max	4 <> 16	5 <> 18
Static Sealing Face – Rod ØD$_1$	1.6 max	10 max	63 max	70 max
Dynamic Sealing Face – Piston ØD$_1$	0.1 <> 0.4	4 max	4 <> 16	5 <> 18
Static Sealing Face – Piston Ød$_1$	1.6 max	10 max	63 max	70 max
Static Housing Faces L$_1$	3.2 max	16 max	125 max	140 max

Chamfers & Radii					
Groove Section ≤ S mm	5.0	7.5	10.0	12.5	15.0
Min Chamfer C mm	3.0	5.0	6.5	7.0	7.5
Max Fillet Rad r$_1$ mm	0.5	0.8	0.8	0.8	0.8
Groove Section S in	0.187	0.250	0.312	0.375	0.500
Min Chamfer C in	0.093	0.125	0.156	0.187	0.250
Max Fillet Rad r$_1$ in	0.020	0.031	0.031	0.031	0.031

Tolerances	Ød$_1$	ØD$_1$	L$_1$ mm	L$_1$ in
Rod	f9	Js11	+0.75 -0.0	+0.030 -0
Piston	js11	H9	+0.75 -0.0	+0.030 -0

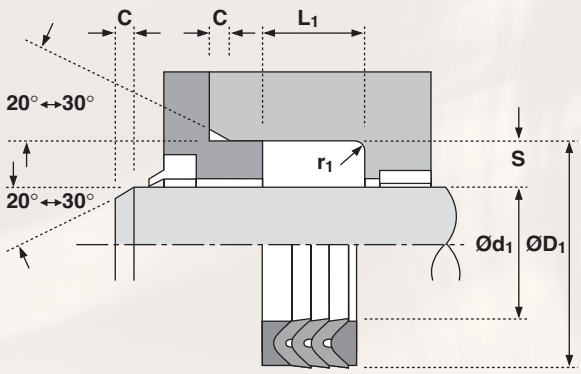

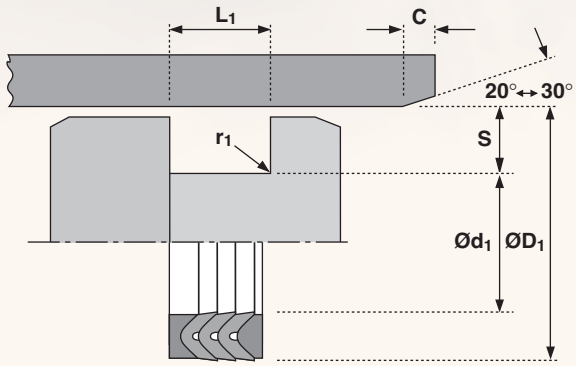

N.B: Size lists give "on line" tolerances for rod applications.

Design

Hallite 09 vee packings incorporates the Hallite 08 vee ring manufactured from fabric reinforced high grade nitrile rubber, which is normally used in multiples in a set with a male and female adaptor.The parts are 'stacked' together and must be lubricated liberally with clean operating fluid prior to assembly.

The packing must be axially pre-loaded by the housing. This preload works through the male adaptor on the pressure side, exerting a hinging action on the vees, forcing the sealing lips apart to ensure a low pressure seal. As the pressure increases, so the hinging action increases, increasing the effectiveness of the seal even where severe vibration, shock loading and knuckling may occur.

The standard Hallite 09 comprises of three vees and two adaptors, available in metric and imperial inch sizes. In addition to the ranges the Hallite 09 is also available for standard American inch housings. Some adaptors are rubber fabric while others are polyacetal resin. Individual vee rings are stocked to supplement the sets, but it should be noted that individual adaptors are only available in special circumstances.

For sizes not listed or for special requirements, please contact your Hallite sales office.

09

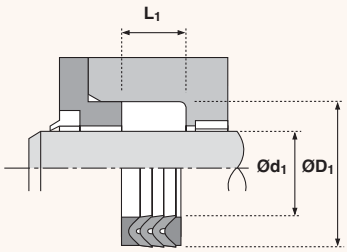

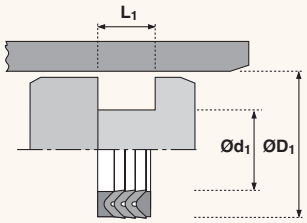

For piston sealing tolerances refer to technical details.

Ød1	TOL f9	ØD1	TOL Js11	L1 +0.75-0.0	PART No.
12.00	-0.016	22.00	+0.055	16.00	0188730
	-0.059		-0.055		
15.00	-0.016	25.00	+0.055	16.00	0189530
	-0.059		-0.055		
16.00	-0.016	26.00	+0.055	16.00	0190130
	-0.059		-0.055		
18.00	-0.016	28.00	+0.055	16.00	0190530
	-0.059		-0.055		
20.00	-0.020	30.00	+0.065	16.00	0190930
	-0.072		-0.065		
22.00	-0.020	32.00	+0.065	16.00	0191730
	-0.072		-0.065		
25.00	-0.020	40.00	+0.065	22.50	0192630
	-0.072		-0.065		
28.00	-0.020	43.00	+0.065	22.50	0193430
	-0.072		-0.065		
30.00	-0.020	45.00	+0.065	22.50	0193930
	-0.072		-0.065		
32.00	-0.025	47.00	+0.080	22.50	0194330
	-0.087		-0.080		
35.00	-0.025	50.00	+0.080	22.50	0195130
	-0.087		-0.080		
36.00	-0.025	51.00	+0.080	22.50	0196030
	-0.087		-0.080		
42.00	-0.025	57.00	+0.080	22.50	0196830
	-0.087		-0.080		
45.00	-0.025	60.00	+0.080	22.50	0197430
	-0.087		-0.080		
48.00	-0.025	63.00	+0.080	22.50	0197730
	-0.087		-0.080		
50.00	-0.025	70.00	+0.080	30.00	1208430
	-0.087		-0.080		
55.00	-0.030	75.00	+0.095	30.00	1208230
	-0.104		-0.095		
56.00	-0.030	76.00	+0.095	32.00	1208630
	-0.104		-0.095		

Ød1	TOL f9	ØD1	TOL Js11	L1 +0.75-0.0	PART No.
60.00	-0.030	80.00	+0.095	32.00	1208930
	-0.104		-0.095		
63.00	-0.030	83.00	+0.095	32.00	1209130
	-0.104		-0.095		
70.00	-0.030	90.00	+0.095	30.00	1209330
	-0.104		-0.095		
75.00	-0.030	95.00	+0.095	30.00	1209530
	-0.104		-0.095		
80.00	-0.030	100.00	+0.095	30.00	1209630
	-0.104		-0.095		
80.00	-0.030	105.00	+0.095	44.00	0984230
	-0.104		-0.095		
85.00	-0.036	105.00	+0.110	30.00	1209830
	-0.123		-0.110		
90.00	-0.036	110.00	+0.095	30.00	1210630
	-0.123		-0.110		
100.00	-0.036	120.00	+0.095	30.00	1210730
	-0.123		-0.110		
105.00	-0.036	125.00	+0.095	30.00	1203130
	-0.123		-0.110		
110.00	-0.036	130.00	+0.095	30.00	1195030
	-0.123		-0.110		
120.00	-0.036	140.00	+0.095	30.00	4137830
	-0.123		-0.110		
125.00	-0.043	150.00	+0.125	34.00	1215330
	-0.143		-0.125		
135.00	-0.043	160.00	+0.125	34.00	1197630
	-0.143		-0.125		
140.00	-0.043	160.00	+0.125	33.00	0677130
	-0.143		-0.125		
150.00	-0.043	180.00	+0.125	45.00	1220130
	-0.143		-0.125		
170.00	-0.043	200.00	+0.125	45.00	1224930
	-0.143		-0.125		
200.00	+0.050	230.00	+0.145	45.00	1225830
	-0.165		-0.145		

Hallite
Fenner Advanced Sealing Technologies

OTP®

Technical details

	Metric		Inch	
Operating conditions				
Maximum Speed	0.5 m/sec		1.5 ft/sec	
Temperature Range	-30°C +100°C		-22°F +212°F	
Maximum Pressure	400 bar		6,000 p.s.i.	
Maximum extrusion gap	**Figures show the maximum permissible gap all on one side using minimum rod Ø and maximum clearance Ø. Refer to Housing Design section.**			
Pressure bar	100	160	250	400
Maximum Gap mm	0.45	0.4	0.3	0.2
Pressure p.s.i.	1500	2400	3750	6000
Surface roughness	µmRa	µmRt	µinCLA	µinRMS
Dynamic Sealing Face $Ød_1$	0.1 <> 0.4	4 max	4 <> 16	5 <> 18
Static Sealing Face $ØD_1$	1.6 max	10 max	63 max	70 max
Static Housing Faces L_1	3.2 max	16 max	125 max	140 max
Chamfers & Radii				
Groove Section ≤ S mm	7.5	10.0	12.5	15.0
Min Chamfer C mm	4.0	5.0	6.5	7.5
Max Fillet Rad r_2 mm	0.4	1.2	1.6	1.6
Tolerances	$Ød_1$ f9	$ØD_1$ H11	L_1 mm +0.2 -0	

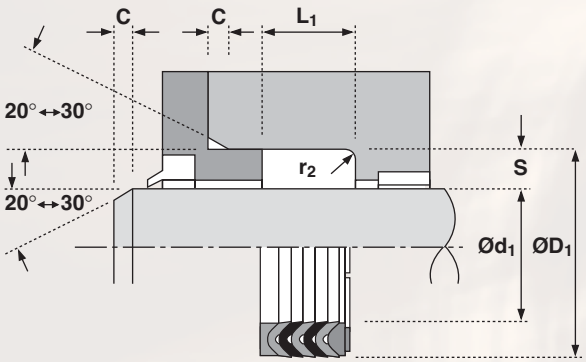

Design

The Hallite 11 is a vee pack rod seal for medium duty applications offering excellent performance and long life even under difficult operating conditions such as pressure surges , vibration and some misalignment. The seal consists of a male and female adaptor and 5 vee rings. The male adaptor is usually manufactured from polyacetal but some of the larger sizes use rubberised fabric. It has grooves across one face to ensure equal pressure to the sealing edges of the vee ring.

All sizes have three vee rings manufactured from rubberised fabric because this has strength and durability and permits an oil film to lubricate the other parts of the seal. Two rubber vee rings are supplied between the rubberised fabric vee rings (up to and including 140mm diameter) to aid low pressure sealing.

The female adaptor uses a hard rubberised fabric to support the vee rings and protect them from extrusion damage. At high pressure the lips of the adaptor acts as a secondary seal.

The proportions of the range have been determined to give a satisfactory performance when used with the recommended operating conditions.

Features

- **Precision moulded Vee Rings**
- **Pressure distribution adaptors**
- **Reliable sealing**

11

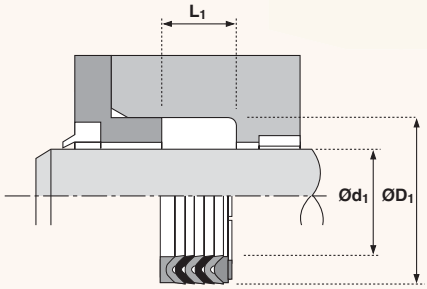

Ød1	TOL f9	ØD1	TOL H11	L1 +0.2-0	PART No.
20	-0.020 -0.072	30	+0.13 +0.00	18.50	4201750
25	-0.020 -0.072	37	+0.16 +0.00	22.50	4198950
28	-0.020 -0.072	40	+0.16 +0.00	22.50	4202050
30	-0.020 -0.072	42	+0.16 +0.00	22.50	4202150
32	-0.025 -0.087	44	+0.16 +0.00	22.50	4202250
35	-0.025 -0.087	47	+0.16 +0.00	22.50	4202350
36	-0.025 -0.087	48	+0.16 +0.00	22.50	4202450
40	-0.025 -0.087	52	+0.19 +0.00	22.50	4202550
42	-0.025 -0.087	54	+0.19 +0.00	22.50	4202650
45	-0.025 -0.087	60	+0.19 +0.00	22.50	4202750
50	-0.025 -0.087	65	+0.19 +0.00	22.50	4199050
55	-0.030 -0.104	70	+0.19 +0.00	22.50	4202950
56	-0.030 -0.104	71	+0.19 +0.00	22.50	4203050
60	-0.030 -0.104	75	+0.19 +0.00	22.50	4203150
63	-0.030 -0.104	78	+0.19 +0.00	22.50	4203250

Ød1	TOL f9	ØD1	TOL H11	L1 +0.2-0	PART No.
65	-0.030 -0.104	80	+0.19 +0.00	22.50	4203350
70	-0.030 -0.104	85	+0.22 +0.00	22.50	4203450
75	-0.030 -0.104	90	+0.22 +0.00	22.50	4203550
80	-0.030 -0.104	95	+0.22 +0.00	22.50	4203650
85	-0.036 -0.123	100	+0.22 +0.00	22.50	4203750
90	-0.036 -0.123	105	+0.22 +0.00	22.50	4203850
100	-0.036 -0.123	115	+0.22 +0.00	30.00	4203950
110	-0.036 -0.123	125	+0.25 +0.00	30.00	4204050
125	-0.043 -0.143	140	+0.25 +0.00	34.00	4204250
140	-0.043 -0.143	155	+0.25 +0.00	34.00	4199250
150	-0.043 -0.143	170	+0.25 +0.00	40.00	2196650
160	-0.043 -0.143	180	+0.25 +0.00	40.00	2196750
180	-0.043 -0.143	200	+0.29 +0.00	40.00	2196850
200	-0.050 -0.165	220	+0.29 +0.00	40.00	2196950

Hallite
Fenner Advanced Sealing Technologies

OTP®

13

Technical details

	Metric	Inch
Operating conditions		
Maximum Speed	0.5 m/sec	1.5 ft/sec
Temperature Range	-30°C + 100°C	-22°F + 212°F
Maximum Pressure	700 bar	10,000 p.s.i.

Maximum extrusion gap

Figures show the maximum permissible gap all on one side using minimum rod Ø and maximum clearance Ø. Refer to Housing Design section.

Pressure bar	160	250	400	700
Maximum Gap mm	0.4	0.3	0.2	0.1
Pressure p.s.i.	2400	3750	6000	10,000

Surface roughness	µmRa	µmRt	µinCLA	µinRMS
Dynamic Sealing Face $Ød_1$	0.1 <> 0.4	4 max	4 <> 16	5 <> 18
Static Sealing Face $ØD_1$	1.6 max	10 max	63 max	70 max
Static Housing Faces L_1	3.2 max	16 max	125 max	140 max

Chamfers & Radii

Groove Section ≤ S mm	6.0	7.5	10.0	12.5	15.0	20.0
Min Chamfer C mm	3.0	4.0	5.0	6.5	7.5	10.0
Max Fillet Rad r_2 mm	0.4	0.4	1.2	1.6	1.6	1.6

Tolerances	$Ød_1$	$ØD_1$	L_1 mm
	f9	H11	+0.2 -0

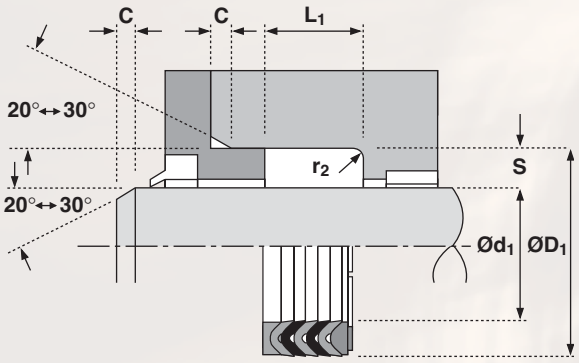

Features

- **Precision moulded Vee Rings**
- **Pressure distribution adaptors**
- **Reliable sealing**

Design

The Hallite 13 is a Vee pack rod seal for heavy duty applications offering excellent performance and long life even under difficult operating conditions such as pressure surges, vibration and some misalignment. The seal assembly consists a male and female adaptor and 5 vee rings.

The male adaptor is usually manufactured from polyacetal but some of the larger sizes use rubberised fabric. It has grooves across one face to ensure equal pressure to the sealing edges of the vee ring.

All sizes have vee rings manufactured from rubberised fabric because this has strength and durability and permits an oil film to lubricate the other parts of the seal. Some sizes are supplied with rubber vee rings between the rubberised fabric vee rings. The number and type of vee rings used are:

	Up to 89 mm Ø	90 mm Ø 139mm Ø	Above 139mmØ
Rubberised fabric vee rings	3	4	5
Rubber vee rings	2	1	

The female adaptor uses a hard rubberised fabric to support the vee rings and protect them from extrusion damage. At high pressures the lips of the adaptor act as a secondary seal.

13

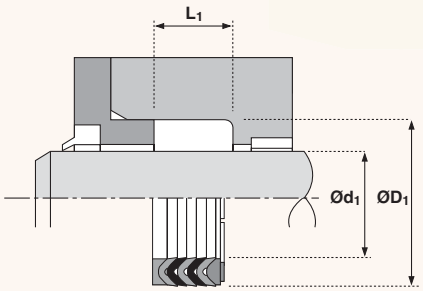

Ød1	TOL f9	ØD1	TOL H11	L1 +0.20-0	PART No.
20	-0.020 -0.072	32	+0.13 +0.00	22.50	4204950
25	-0.020 -0.072	40	+0.16 +0.00	22.50	4205050
30	-0.020 -0.072	45	+0.16 +0.00	22.50	4205150
35	-0.025 -0.087	50	+0.16 +0.00	22.50	4205250
40	-0.025 -0.087	55	+0.19 +0.00	22.50	4205350
45	-0.025 -0.087	65	+0.19 +0.00	27.50	4205450
50	-0.025 -0.087	70	+0.19 +0.00	30.00	4205550
55	-0.030 -0.104	75	+0.19 +0.00	30.00	4205650
60	-0.030 -0.104	80	+0.19 +0.00	37.00	4205750
65	-0.030 -0.104	85	+0.22 +0.00	40.00	4205850
70	-0.030 -0.104	90	+0.22 +0.00	40.00	4205950
75	-0.030 -0.104	95	+0.22 +0.00	40.00	4206050
80	-0.030 -0.104	100	+0.22 +0.00	40.00	4206150
90	-0.036 -0.123	110	+0.22 +0.00	40.00	4206250
100	-0.036 -0.123	120	+0.22 +0.00	40.00	4199150

Ød1	TOL f9	ØD1	TOL H11	L1 +0.20-0	PART No.
110	-0.036 -0.123	130	+0.25 +0.00	40.00	4206350
115	-0.036 -0.123	140	+0.25 +0 00	46.00	4206450
125	-0.043 -0.143	150	+0.25 +0.00	46.00	4206550
140	-0.043 -0.143	165	+0.25 +0.00	46.00	4206650
150	-0.043 -0.143	180	+0.25 +0.00	60.00	4206750
160	-0.043 -0.143	190	+0.29 +0.00	60.00	4206850
180	-0.043 -0.143	210	+0.29 +0.00	60.00	4206950
195	-0.050 -0.165	225	+0.29 +0.00	62.50	6582150
200	-0.050 -0.165	230	+0.29 +0.00	60.00	4207050
220	-0.050 -0.165	250	+0.29 +0.00	62.50	6582350
245	-0.050 -0.165	275	+0.32 +0.00	62.50	6582450
270	-0.056 -0.186	300	+0.32 +0.00	62.50	6582550
290	-0.056 -0.186	320	+0.36 +0.00	64.00	6582650
320	-0.062 -0.212	360	+0.36 +0.00	78.00	6582750
380	-0.062 -0.212	420	+0.40 +0.00	80.00	6584050

14

Technical details

	Metric	Inch
Operating conditions		
Maximum Speed	0.5 m/sec	1.5 ft/sec
Temperature Range	-30°C +100°C	-22°F +212°F
Maximum Pressure	700 bar	10,000 p.s.i.

Maximum extrusion gap

Figures show the maximum permissible gap all on one side using minimum rod Ø and maximum clearance Ø. Refer to Housing Design section.

Pressure bar	160	250	400	700
Maximum Gap mm	0.4	0.3	0.2	0.1
Pressure p.s.i.	2400	3750	6000	10,000

Surface roughness	µmRa	µmRt	µinCLA	µinRMS
Dynamic Sealing Face Ød$_1$	0.1 <> 0.4	4 max	4 <> 16	5 <> 18
Static Sealing Face ØD$_1$	1.6 max	10 max	63 max	70 max
Static Housing Faces L$_1$	3.2 max	16 max	125 max	140 max

Chamfers & Radii						
Groove Section ≤ S mm	6.0	7.5	10	12.5	15.0	20.0
Min Chamfer C mm	3.0	4.0	5.0	6.5	7.5	10.0
Max Fillet Rad r$_2$ mm	0.4	0.4	1.2	1.6	1.6	1.6

Tolerances	Ød$_1$	ØD$_1$	L$_1$ mm
	f9	H11	+0.2 -0

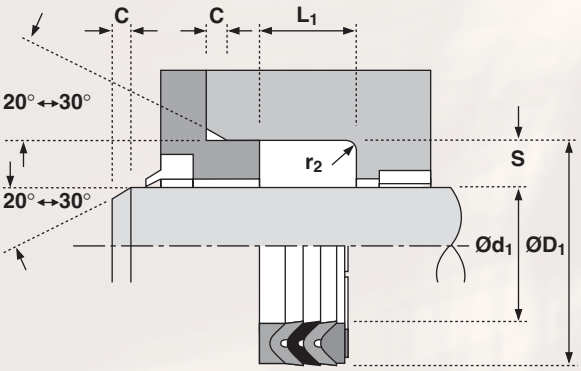

Features

- **Precision moulded Vee Rings**
- **Pressure distribution adaptors**
- **Reliable sealing**

Design

The Hallite 14 is a vee pack rod seal for heavy duty applications offering excellent performance and long life even under difficult operating conditions such as pressure surges, vibration and some misalignment. The seal consists of a male and female adaptor and three vee rings.

The male adaptor is usually manufactured from polyacetal but some of the larger sizes use rubberised fabric. It has grooves across one face to ensure equal pressure to the sealing edges of the vee ring.

All sizes have vee rings manufactured from rubberised fabric because this has strength and durability and permits an oil film to lubricate the other parts of the seal. The smaller sizes are supplied with a rubber vee ring between the rubberised fabric vee rings. The number and type of vee rings used are :

	Up to 139 mm Ø	Above 139mm Ø
Rubberised fabric vee rings	2	3
Rubber vee rings	1	

The female adaptor uses a hard rubberised fabric to support the vee rings and protect them from extrusion damage. At high pressures the lips of the adaptor act as a secondary seal.

14

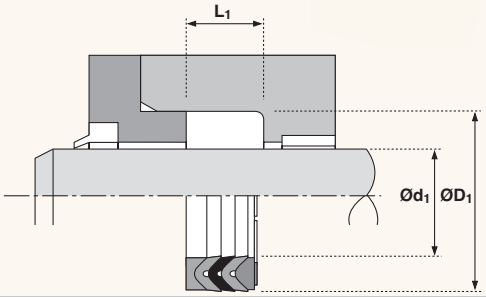

Ød1	TOL f9	ØD1	TOL H11	L1 +0.2-0	PART No.
20	-0.020 -0.072	32	+0.16 +0.00	16.50	4204930
25	-0.020 -0.072	40	+0.16 +0.00	16.50	4205030
30	-0.020 -0.072	45	+0.16 +0.00	16.50	4205130
35	-0.025 -0.087	50	+0.16 +0.00	16.50	4205230
40	-0.025 -0.087	55	+0.19 +0.00	16.50	4205330
45	-0.025 -0.087	65	+0.19 +0.00	20.50	4205430
50	-0.025 -0.087	70	+0.19 +0.00	22.00	4205530
55	-0.030 -0.104	75	+0.19 +0.00	22.00	4205630
60	-0.030 -0.104	80	+0.19 +0.00	27.00	4205730
65	-0.030 -0.104	85	+0.22 +0.00	30.00	4205830
70	-0.030 -0.104	90	+0.22 +0.00	30.00	4205930
75	-0.030 -0.104	95	+0.22 +0.00	30.00	4206030
80	-0.030 -0.104	100	+0.22 +0.00	30.00	4206130
90	-0.036 -0.123	110	+0.22 +0.00	30.00	4206230
100	-0.036 -0.123	120	+0.22 +0.00	30.00	4199130

Ød1	TOL f9	ØD1	TOL H11	L1 +0.2-0	PART No.
110	-0.036 -0.123	130	+0.25 +0.00	30.00	4206330
115	-0.036 -0.123	140	+0.25 +0.00	34.00	4206430
125	-0.043 -0.143	150	+0.25 +0.00	34.00	4206530
140	-0.043 -0.143	165	+0.25 +0.00	34.00	4206630
150	-0.043 -0.143	180	+0.25 +0.00	45.00	4206730
160	-0.043 -0.143	190	+0.29 +0.00	45.00	4206830
180	-0.043 -0.143	210	+0.29 +0.00	45.00	4206930
195	-0.050 -0.165	225	+0.29 +0.00	47.50	6582130
200	-0.050 -0.165	230	+0.29 +0.00	45.00	4207030
220	-0.050 -0.165	250	+0.29 +0.00	47.50	6582330
245	-0.050 -0.165	275	+0.32 +0.00	47.50	6582430
270	-0.056 -0.186	300	+0.32 +0.00	47.50	6582530
290	-0.056 -0.186	320	+0.36 +0.00	49.00	6582630
320	-0.062 -0.212	360	+0.36 +0.00	58.00	6582730
380	-0.062 -0.212	420	+0.40 +0.00	60.00	6584030

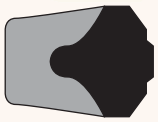

15

Technical details

	Metric	Inch
Operating conditions		
Maximum Speed	0.5 m/sec	1.5 ft/sec
Temperature Range	-30°C + 100°C	-22°F + 212°F
Maximum Pressure	300 bar	4500 p.s.i.

Maximum extrusion gap

Figures show the maximum permissible gap all on one side using minimum rod Ø and maximum clearance Ø. Refer to Housing Design section.

Pressure bar	100	160	250	300
Maximum Gap mm	0.45	0.4	0.3	0.25
Pressure p.s.i.	1500	2400	3750	4500

Surface roughness	µmRa	µmRt	µinCLA	µinRMS
Dynamic Sealing Face – Rod Ød$_1$	0.1 <> 0.4	4 max	4 <> 16	5 <> 18
Static Sealing Face – Rod ØD$_1$	1.6 max	10 max	63 max	70 max
Dynamic Sealing Face – Piston ØD$_1$	0.1 <> 0.4	4 max	4 <> 16	5 <> 18
Static Sealing Face – Piston Ød$_1$	1.6 max	10 max	63 max	70 max
Static Housing Faces L$_1$	3.2 max	16 max	125 max	140 max

Chamfers & Radii					
Groove Section ≤ S mm	4.0	5.0	6.0	7.5	10.0
Min Chamfer C mm	2.0	2.5	3.0	4.0	5.0
Max Fillet Rad r$_1$ mm	0.2	0.4	0.8	0.8	0.8
Max Fillet Rad r$_2$ mm	0.4	0.8	1.2	1.2	1.2

Tolerances	Ød$_1$	ØD$_1$	L$_1$ mm
Rod	f9	Js11	+0.25 -0
Piston	js11	H9	+0.25 -0

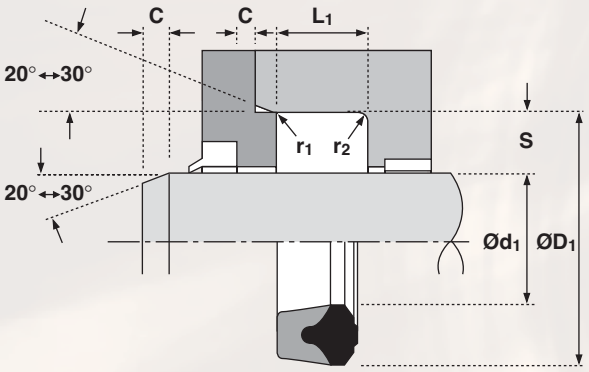

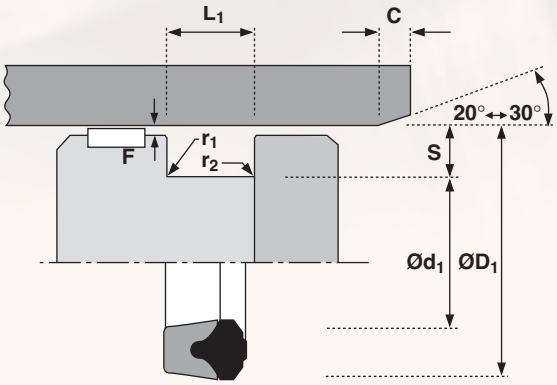

Design

The Hallite 15 rod seal has been well proven in many applications requiring a compact, low friction seal to work efficiently both at low and high pressures.

The seal comprises a rubberised fabric U ring to give strength and durability, to which is moulded a rubber header. It is designed to have a controlled pre-load across the angled rubber lips which are accurately machine trimmed, to ensure a good seal at low pressure.

The seal becomes more effective as the pressure increases and the rubberised fabric deforms to the housing increasing the seal contact area. The surface of the fabric has pockets which retain lubrication to reduce friction and wear.

The proportions of the range have been determined to give a satisfactory performance when used with the recommended operating conditions. Many other sizes are available outside this range.

The range should be fitted to split housings as shown, but sizes marked* can be fitted to a grooved gland housing , if assembled with care.

NB:

Size lists give "on line" tolerances for rod applications.

Features

- **Well proven seal**
- **Contamination resistance**
- **Good wear resistance**

15

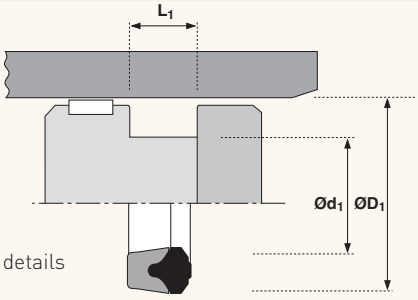

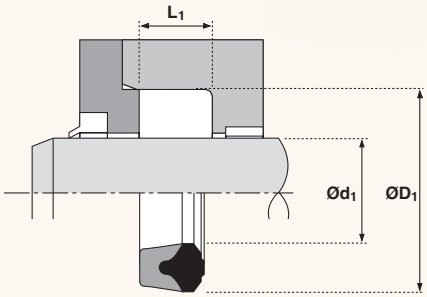

For piston sealing tolerances refer to technical details

Ød1	TOL f9	ØD1	TOL Js11	L1 +0.25-0	PART No.
16	-0.016 -0.059	26	+0.07 -0.07	8.0	0754300
20	-0.020 -0.072	28	+0.07 -0.07	6.4	2137000*
22	-0.020 -0.072	30	+0.07 -0.07	6.4	2137100*
22	-0.020 -0.072	32	+0.08 -0.08	9.0	0377300
25	-0.020 -0.072	33	+0.08 -0.08	6.4	2137200*
28	-0.020 -0.072	36	+0.08 -0.08	6.4	2137300*
28	-0.020 -0.072	40	+0.08 -0.08	9.0	0690700
30	-0.020 -0.072	38	+0.08 -0.08	6.4	2137400*
30	-0.020 -0.072	40	+0.08 -0.08	7.5	0032400*
32	-0.025 -0.087	40	+0.08 -0.08	6.4	2137500*
35	-0.025 -0.087	43	+0.08 -0.08	6.4	2137600*
35	-0.025 -0.087	50	+0.08 -0.08	11.0	0874400
36	-0.025 -0.087	44	+0.08 -0.08	6.4	2137700*
36	-0.025 -0.087	48	+0.08 -0.08	9.0	0690600*
40	-0.025 -0.087	48	+0.08 -0.08	6.4	2137800*
40	-0.025 -0.087	50	+0.08 -0.08	7.5	0188600*
40	-0.025 -0.087	50	+0.08 -0.08	10.5	1252100*
45	-0.025 -0.087	55	+0.10 -0.10	8.0	2137900*
45	-0.025 -0.087	60	+0.10 -0.10	10.0	1022800*

Ød1	TOL f9	ØD1	TOL Js11	L1 +0.25-0	PART No.
50	-0.025 -0.087	60	+0.10 -0.10	8.0	1204400*
55	-0.030 -0.104	65	+0.10 -0.10	8.0	0208700*
56	-0.030 -0.104	66	+0.10 -0.10	8.0	2138000*
56	-0.030 -0.104	71	+0.10 -0.10	12.0	0332600*
60	-0.030 -0.104	70	+0.10 -0.10	8.0	0208500*
60	-0.030 -0.104	80	+0.10 -0.10	14.0	0391400*
63	-0.030 -0.104	75	+0.10 -0.10	9.6	2138100*
65	-0.030 -0.104	77	+0.10 -0.10	9.6	2138200*
70	-0.030 -0.104	80	+0.10 -0.10	7.5	0057700*
70	-0.030 -0.104	82	+0.11 -0.11	9.6	2146800*
70	-0.030 -0.104	85	+0.11 -0.11	12.0	0384500
80	-0.030 -0.104	92	+0.11 -0.11	9.6	2138300*
90	-0.036 -0.123	102	+0.11 -0.11	9.6	2138400*
90	-0.036 -0.123	105	+0.11 -0.11	9.5	2174600*
100	-0.036 -0.123	115	+0.11 -0.11	12.0	2138500*
100	-0.036 -0.123	120	+0.11 -0.11	15.0	0466100*
110	-0.036 -0.123	125	+0.13 -0.13	12.0	0749300*
115	-0.036 -0.123	130	+0.13 -0.13	12.0	2136900*

Technical details

	Metric				Inch	
Operating conditions						
Maximum Speed	4.0 m/sec				12.0 ft/sec	
Temperature Range	-30°C + 100°C				-22°F + 212°F	
Maximum Pressure	300 bar				4500 p.s.i.	
Maximum extrusion gap	**Figures show the maximum permissible gap all on one side using minimum rod Ø and maximum clearance Ø. Refer to Housing Design section.**					
Pressure bar	100	150	250	300		
Maximum Gap mm	0.6	0.5	0.45	0.4		
Pressure p.s.i.	1500	2400	3750	4500		
Surface roughness	µmRa	µmRt	µinCLA	µinRMS		
Dynamic Sealing Face $Ød_1$	0.1 <> 0.4	4 max	4 <> 16	5 <> 18		
Static Sealing Face $ØD_1$	1.6 max	10 max	63 max	70 max		
Static Housing Faces L_1	3.2 max	16 max	125 max	140 max		
Chamfers & Radii						
Groove Section ≤ S mm	3.75	5.50	7.75	10.50	12.25	
Min Chamfer C mm	2.0	3.0	5.0	7.5	8.0	
Max Fillet Rad r_1 mm	0.4	0.8	1.2	1.6	1.6	
Tolerances	$Ød_1$	$ØD_1$	L_1 mm			
	f9	H11	+0.2 -0			

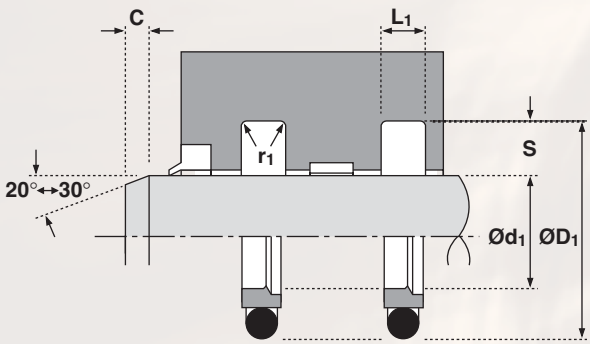

Features

- **Ultra low friction**
- **Compact housing**
- **Inch sizes available on request**
- **The seal ring component is machined by Hallite, therefore any size can be catered for**

Materials

Face material - O-Ring	last two digits of part number
Standard material	
15% Glass/PTFE - NBR	_ _ _ _ _ **10**
Material options:	
15% Glass/PTFE - FKM	_ _ _ _ _ **11**
Bronze/PTFE - NBR	_ _ _ _ _ **20**
Bronze/PTFE - FKM	_ _ _ _ _ **21**

Technical details shown are for 15% Glass/PTFE and NBR energiser. Technical details for material options should be requested from Hallite Seals.

Design

Used in tandem, the Hallite 16 rod seal provides the designer with a compact low friction seal for light to medium duty hydraulic cylinders.

It has a special filled PTFE ring with a pre-loaded lip energised by an O ring. The lip is designed to have a contact area with the rod adequate to retain the media at low pressure. As high pressure acts on the O ring it compresses the lip against the rod increasing the contact area and the effectiveness of the seal.

The special PTFE ring has the low frictional properties normally associated with this material but is strengthened by additives to reduce creep. It has a low breakout friction so stick-slip is eliminated.

Standard seals are supplied with a nitrile O ring but other materials can be provided.

For the best results it is recommended two seals are fitted. The PTFE ring should always be mounted with the sealing lip on the pressure side. Sizes above 30mm are easily installed by deforming the PTFE ring into a kidney shape, sizes under 30mm are best installed using a tool, details of which can be provided.

A number of material options can be provided to extend operating conditions. Please ensure that the correct part number is specified for the material option as indicated.

NB: Part numbers suffixed by "‡" indicate housing sizes to meet ISO7425-2.

16

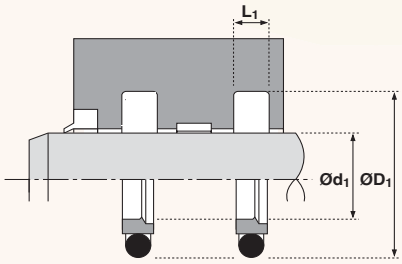

Ød1	TOL f9	ØD1	TOL H11	L1 +0.2-0	PART No.
12	-0.016 -0.059	19.5	+0.13 +0.00	3.2	86106_ _‡
14	-0.016 -0.059	21.5	+0.13 +0.00	3.2	86098_ _‡
15	-0.016 -0.059	22.5	+0.13 +0.00	3.2	86179_ _
16	-0.016 -0.059	23.5	+0.13 +0.00	3.2	66225_ _‡
18	-0.016 -0.059	25.5	+0.13 +0.00	3.2	66226_ _‡
20	-0.020 -0.072	31.0	+0.16 +0.00	4.2	65948_ _‡
22	-0.020 -0.072	33.0	+0.16 +0.00	4.2	65949_ _‡
25	-0.020 -0.072	36.0	+0.16 +0.00	4.2	65950_ _‡
28	-0.020 -0.072	39.0	+0.16 +0.00	4.2	66227_ _‡
30	-0.020 -0.072	41.0	+0.16 +0.00	4.2	65951_ _
32	-0.025 -0.087	43.0	+0.16 +0.00	4.2	65952_ _‡
35	-0.025 -0.087	46.0	+0.16 +0.00	4.2	66228_ _
36	-0.025 -0.087	47.0	+0.16 +0.00	4.2	65953_ _‡
40	-0.025 -0.087	55.5	+0.19 +0.00	6.3	65954_ _
43	-0.025 -0.087	58.5	+0.19 +0.00	6.3	86075_ _
45	-0.025 -0.087	60.5	+0.19 +0.00	6.3	65955_ _
50	-0.025 -0.087	65.5	+0.19 +0.00	6.3	65956_ _
56	-0.030 -0.104	71.5	+0.19 +0.00	6.3	65957_ _
60	-0.030 -0.104	75.5	+0.19 +0.00	6.3	65958_ _
63	-0.030 -0.104	78.5	+0.19 +0.00	6.3	65959_ _‡
65	-0.030 -0.104	80.5	+0.22 +0.00	6.3	65960_ _
70	-0.030 -0.104	85.5	+0.22 +0.00	6.3	65961_ _‡
75	-0.030 -0.104	90.5	+0.22 +0.00	6.3	65962_ _

Ød1	TOL f9	ØD1	TOL H11	L1 +0.2-0	PART No.
78	-0.030 -0.104	93.5	+0.22 +0.00	6.3	86112_ _
80	-0.030 -0.104	95.5	+0.22 +0.00	6.3	65963_ _‡
85	-0.036 -0.123	100.5	+0.22 +0.00	6.3	65964_ _
90	-0.036 -0.123	105.5	+0.22 +0.00	6.3	65965_ _‡
95	-0.036 -0.123	110.5	+0.22 +0.00	6.3	65966_ _
97	-0.036 -0.123	112.5	+0.22 +0.00	6.3	86113_ _
100	-0.036 -0.123	115.5	+0.22 +0.00	6.3	65967_ _‡
105	-0.036 -0.123	120.5	+0.25 +0.00	6.3	86478_ _
110	-0.036 -0.123	125.5	+0.25 +0.00	6.3	66229_ _‡
115	-0.036 -0.123	130.5	+0.25 +0.00	6.3	66391_ _
120	-0.036 -0.123	135.5	+0.25 +0.00	6.3	86099_ _
125	-0.043 -0.143	140.5	+0.25 +0.00	6.3	66392_ _‡
130	-0.043 -0.143	145.5	+0.25 +0.00	6.3	86102_ _
135	-0.043 -0.143	150.5	+0.25 +0.00	6.3	86103_ _
140	-0.043 -0.143	155.5	+0.25 +0.00	6.3	66393_ _‡
145	-0.043 -0.143	160.5	+0.25 +0.00	6.3	86156_ _
150	-0.043 -0.143	165.5	+0.25 +0.00	6.3	86157_ _
160	-0.043 -0.143	175.5	+0.25 +0.00	6.3	66394_ _‡
170	-0.043 -0.143	185.5	+0.25 +0.00	6.3	86083_ _
180	-0.043 -0.143	195.5	+0.29 +0.00	6.3	66395_ _‡
190	-0.050 -0.165	205.5	+0.29 +0.00	6.3	86074_ _
200	-0.050 -0.165	221.0	+0.29 +0.00	8.1	66396_ _‡
210	-0.050 -0.165	231.0	+0.29 +0.00	8.1	86094_ _

Hallite
Fenner Advanced Sealing Technologies

OTP®

18

Technical details

	Metric						Inch
Operating conditions							
Maximum Speed	0.5 m/sec						1.5 ft/sec
Temperature Range	-30°C +100°C						-22°F +212°F
Maximum Pressure	500 bar						7500 p.s.i.

Maximum extrusion gap

Figures show the maximum permissible gap all on one side, for rod seals using minimum rod Ø and maximum clearance Ø and for piston seals using the minimum clearance Ø and maximum bore Ø. Refer to Housing Design section.

Pressure bar	160	250	400	500
Maximum Gap mm	0.4	0.3	0.2	0.1
Pressure p.s.i.	2400	3750	6000	7500
Maximum Gap in	0.016	0.012	0.008	0.004

Surface roughness	µmRa	µmRt	µinCLA	µinRMS
Dynamic Sealing Face – Rod Ød$_1$	0.1 <> 0.4	4 max	4 <> 16	5 <> 18
Static Sealing Face – Rod ØD$_1$	1.6 max	10 max	63 max	70 max
Dynamic Sealing Face – Piston ØD$_1$	0.1 <> 0.4	4 max	4 <> 16	5 <> 18
Static Sealing Face – Piston Ød$_1$	1.6 max	10 max	63 max	70 max
Static Housing Faces L$_1$	3.2 max	16 max	125 max	140 max

Chamfers & Radii							
Groove Section ≤ S mm	4.0	5.0	7.5	10.0	12.5	15.0	20.0
Min Chamfer C mm	2.0	2.5	4.0	5.0	6.5	7.5	10.0
Max Fillet Rad r$_1$ mm	0.2	0.4	0.8	0.8	1.2	1.6	1.6
Max Fillet Rad r$_2$ mm	0.4	0.8	1.2	1.2	1.6	2.4	2.4
Groove Section ≤ S in	0.187	0.250	0.312	0.375	0.500	0.625	0.750
Min Chamfer C in	0.093	0.125	0.156	0.187	0.217	0.250	0.375
Max Fillet Rad r$_1$ in	0.008	0.016	0.032	0.032	0.032	0.047	0.047
Max Fillet Rad r$_2$ in	0.016	0.032	0.047	0.047	0.047	0.062	0.062

Tolerances	Ød$_1$	ØD$_1$	L$_1$ mm	L$_1$ in
Rod	f9	Js11	+0.25 -0	+0.010 -0
Piston	js11	H9	+0.25 -0	+0.010 -0

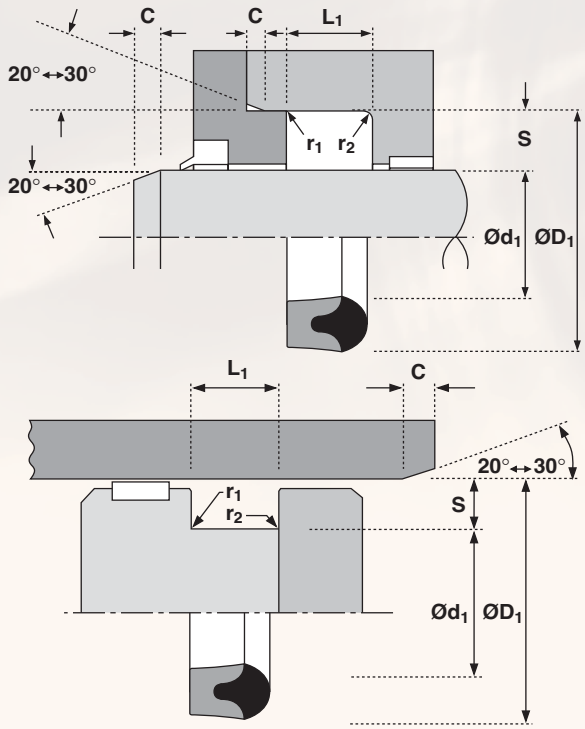

The range should be fitted to split housings as shown, but sizes marked* can be fitted to a grooved gland housing , if assembled with care.

Design

A medium to heavy duty single acting seal, the Hallite 18 has shown itself over many years to be an effective and robust seal in a wide variety of applications.

The seal comprises a rubberised fabric U form base to which is bonded a rubber energiser.

The seal section is pre-loaded by the housing when installed to ensure effective sealing at low pressure. When the pressure increases the rubber energises the U form to increase the sealing area and hence the efficiency of the seal. The strength and durability of the rubberised fabric combines with its ability to retain lubricant keeping friction and wear to a minimum.
In a piston application the Hallite 18 should not be used back to back to make a double acting assembly.

Features

- **The original hallite fluid seal**
- **General purpose seal**
- **Long life**

NB:

Size lists give "on line" tolerances for rod applications.

18

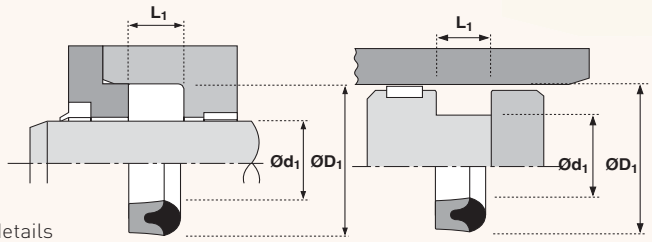

For piston sealing tolerances refer to technical details

Ød1	TOL f9	ØD1	TOL Js11	L1 +0.25-0	PART No.
6	-0.010 -0.040	14	+0.05 -0.05	6.0	0202200
8	-0.013 -0.049	16	+0.05 -0.05	6.0	0202400
10	-0.013 -0.049	18	+0.06 -0.06	6.0	0202500
12	-0.016 -0.059	20	+0.07 -0.07	6.0	0202600
14	-0.016 -0.059	24	+0.07 -0.07	7.5	0202700
15	-0.016 -0.059	25	+0.07 -0.07	7.5	0202800
16	-0.016 -0.059	26	+0.07 -0.07	7.5	0615900
18	-0.016 -0.059	28	+0.07 -0.07	7.5	0202900
20	-0.020 -0.072	30	+0.07 -0.07	7.5	0200500
22	-0.020 -0.072	30	+0.07 -0.07	6.0	0817600
22	-0.020 -0.072	32	+0.08 -0.08	7.5	0203300
25	-0.020 -0.072	40	+0.08 -0.08	11.0	0472800
28	-0.020 -0.072	43	+0.08 -0.08	11.0	0204300
30	-0.020 -0.072	45	+0.08 -0.08	11.0	0204400
30	-0.020 -0.072	50	+0.08 -0.08	14.0	0282100
32	-0.025 -0.087	47	+0.08 -0.08	11.0	0204600
35	-0.025 -0.087	45	+0.08 -0.08	7.5	0052300
35	-0.025 -0.087	50	+0.08 -0.08	11.0	0474600
36	-0.025 -0.087	44	+0.08 -0.08	6.0	1204900*
36	-0.025 -0.087	51	+0.10 -0.10	11.0	0978800
40	-0.025 -0.087	50	+0.08 -0.08	10.5	0202000*
40	-0.025 -0.087	55	+0.10 -0.10	11.0	0475000
45	-0.025 -0.087	60	+0.10 -0.10	11.0	0979400
45	-0.025 -0.087	65	+0.10 -0.10	14.0	0281700
50	-0.025 -0.087	60	+0.10 -0.10	7.5	0179300*
50	-0.025 -0.087	65	+0.10 -0.10	10.0	0208400*
50	-0.025 -0.087	65	+0.10 -0.10	11.0	0383800*
50	-0.025 -0.087	70	+0.10 -0.10	14.0	0294600
55	-0.030 -0.104	65	+0.10 -0.10	8.0	0242600*
56	-0.030 -0.104	76	+0.10 -0.10	14.0	0646100
60	-0.030 -0.104	72	+0.10 -0.10	9.5	1397700*
60	-0.030 -0.104	80	+0.10 -0.10	14.0	0294900
63	-0.030 -0.104	83	+0.11 -0.11	14.0	0646300
65	-0.030 -0.104	80	+0.11 -0.11	11.0	0740700*
70	-0.030 -0.104	90	+0.11 -0.11	14.0	0296000
75	-0.030 -0.104	90	+0.11 -0.11	12.0	0740600*
75	-0.030 -0.104	95	+0.11 -0.11	14.0	0412700
80	-0.030 -0.104	95	+0.11 -0.11	12.0	0732700*
80	-0.030 -0.104	100	+0.11 -0.11	14.0	0295100*
90	-0.036 -0.123	110	+0.11 -0.11	10.0	0306700*
90	-0.036 -0.123	110	+0.11 -0.11	14.0	0071700*
90	-0.036 -0.123	110	+0.11 -0.11	15.0	0712400*
100	-0.036 -0.123	115	+0.11 -0.11	12.0	0740500*
100	-0.036 -0.123	120	+0.11 -0.11	14.0	0296100*
100	-0.036 -0.123	125	+0.13 -0.13	19.0	0418600*
110	-0.036 -0.123	125	+0.13 -0.13	11.0	0558300*

18

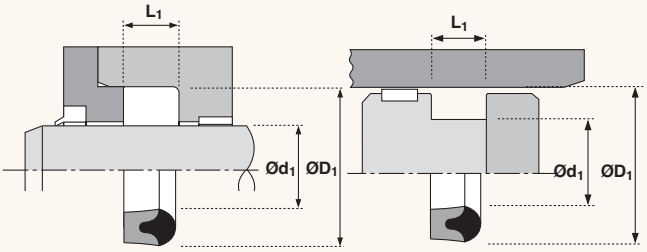

For piston sealing tolerances refer to technical details

Ød1	TOL f9	ØD1	TOL Js11	L1 +0.25-0	PART No.
110	-0.036 -0.123	135	+0.13 -0.13	19.0	0304300*
115	-0.036 -0.123	135	+0.13 -0.13	14.0	0639900*
120	-0.036 -0.123	140	+0.13 -0.13	12.0	0250500*
120	-0.036 -0.123	145	+0.13 -0.13	19.0	0070400*
125	-0.043 -0.143	150	+0.13 -0.13	19.0	0070500*
130	-0.043 -0.143	145	+0.13 -0.13	11.3	0634500*
135	-0.043 -0.143	160	+0.13 -0.13	19.0	0080400*
140	-0.043 -0.143	160	+0.13 -0.13	14.0	0304600*
140	-0.043 -0.143	165	+0.13 -0.13	19.0	0080500*
150	-0.043 -0.143	170	+0.13 -0.13	14.0	0303300*
160	-0.043 -0.143	180	+0.13 -0.13	15.0	1283100*
160	-0.043 -0.143	190	+0.15 -0.15	24.0	0136100*
175	-0.043 -0.143	200	+0.15 -0.15	19.0	0838800*

Ød1	TOL f9	ØD1	TOL Js11	L1 +0.25-0	PART No.
180	-0.043 -0.143	210	+0.15 -0.15	24.0	0087200*
200	-0.050 -0.165	220	+0.15 -0.15	15.0	1284100*
200	-0.050 -0.165	230	+0.15 -0.15	24.0	2010000*
220	-0.050 -0.165	250	+0.15 -0.15	22.0	0958900*
250	-0.050 -0.165	280	+0.16 -0.16	24.0	1055500*
270	-0.056 -0.186	300	+0.16 -0.16	24.0	0094800*
280	-0.056 -0.186	310	+0.16 -0.16	24.0	0094900*
300	-0.056 -0.186	330	+0.18 -0.18	24.0	0095000*
320	-0.062 -0.212	360	+0.18 -0.18	30.0	1054000*
360	-0.062 -0.212	400	+0.18 -0.18	30.0	1054300*
380	-0.062 -0.212	420	+0.20 -0.20	30.0	0095100*
400	-0.062 -0.212	440	+0.20 -0.20	30.0	0095200*

Hallite
Fenner Advanced Sealing Technologies

OTP®

33

Technical details

	Metric		Inch	
Operating conditions				
Maximum Speed	4.0 m/sec		12.0 ft/sec	
Temperature Range	-30°C +100°C		-22°F +212°F	
Surface roughness	µmRa	µmRt	µinCLA	µinRMS
Dynamic Sealing Face Ød$_1$	0.1 <> 0.4	4 max	4 <> 16	5 <> 18
Static Sealing Face ØD$_1$ ØD$_2$	2.5 max	16 max	100 max	111 max
Static Housing Faces L$_1$	2.5 max	16 max	100 max	111 max
Radii				
Rod Diameter Ød$_1$ mm	≤ 50	≤ 90	≤ 200	> 200
Max Fillet Rad r$_1$ mm	0.4	0.4	0.4	0.8
Max Fillet Rad r$_2$ mm	0.2	0.4	0.6	0.8
Rod Diameter Ød$_1$ in	all			
Max Fillet Rad r$_1$ in	0.010			
Max Fillet Rad r$_2$ in	0.020			

Tolerances	Ød$_1$	ØD$_1$	ØD$_2$	L$_1$
mm	f9	H11	H11	+0.2 -0
in	f9	+0.020 +0.010	±0.005	+0.020 +0.010

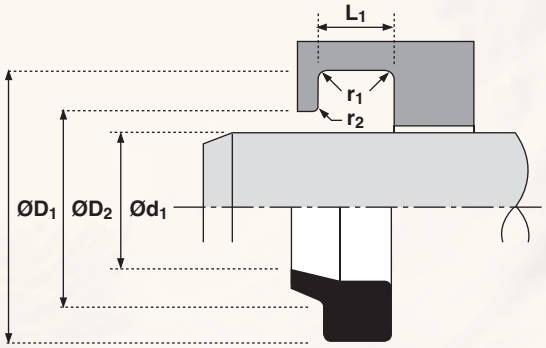

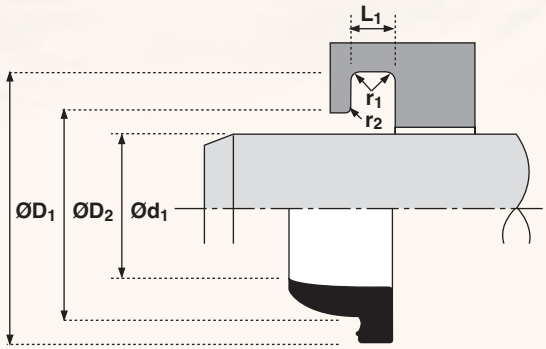

METRIC

INCH

Hallite 33
The metric and inch profiles differ as illustrated above.

Design

The Hallite 33 wiper has a lip designed to remove lightly adhered dirt from the rod i.e. mud, dust or moisture.

The wiper is manufactured from a hard nitrile rubber suitable for installing in a grooved housing. Rod diameters (Ød1) of 20mm and below require a two piece housing .

To prevent dirt passing the outside of the wiper and to reduce the pumping action, the outside diameter is an interference fit with the housing. Certain sizes of the standard Hallite 33 metric range are suitable for ISO 6195 Housing Type A.

It should also be noted that the Hallite 33 inch profile differs from the metric profile.

Features

- **General purpose wiper**
- **Wide size ranges**
- **Effective seal on housing as well as rod**

NB: Part numbers suffixed by "‡" indicate housing sizes to meet ISO6195A. Many of the metric sizes are also available as polyester wipers – see Hallite 38.

33

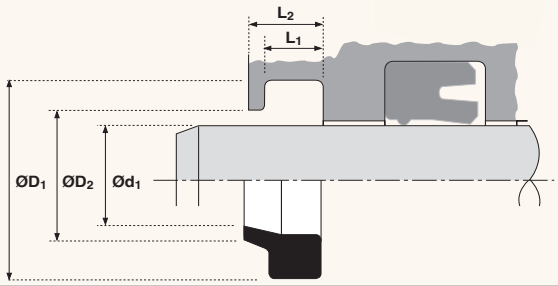

Ød1	TOL f9	ØD1	TOL H11	ØD2	TOL H11	L1 +0.2 - 0	L2	PART No.
12	-0.016 -0.059	20.0	+0.13 +0.00	16.0	+0.11 +0.00	4.0	6.0	2232500
14	-0.016 -0.059	22.0	+0.13 +0.00	18.0	+0.11 +0.00	4.0	6.0	2232600
16	-0.016 -0.059	24.0	+0.13 +0.00	20.0	+0.13 +0.00	4.0	6.0	2232800
18	-0.016 -0.059	26.0	+0.13 +0.00	22.0	+0.13 +0.00	4.0	6.0	2232900
20	-0.020 -0.072	28.0	+0.13 +0.00	24.0	+0.13 +0.00	4.0	6.0	2233000
22	-0.020 -0.072	30.0	+0.13 +0.00	26.0	+0.13 +0.00	4.0	6.0	2233100
25	-0.020 -0.072	33.0	+0.16 +0.00	29.0	+0.13 +0.00	4.0	6.0	2233200
25	-0.020 -0.072	33.0	+0.16 +0.00	30.5	+0.16 +0.00	5.0	6.4	6586200‡
28	-0.020 -0.072	36.0	+0.16 +0.00	32.0	+0.16 +0.00	4.0	6.0	2233300
28	-0.020 -0.072	36.0	+0.16 +0.00	33.5	+0.16 +0.00	5.0	6.4	6586300‡
30	-0.020 -0.072	42.0	+0.16 +0.00	36.0	+0.16 +0.00	6.0	9.0	2233400
32	-0.025 -0.087	40.0	+0.16 +0.00	37.5	+0.16 +0.00	5.0	6.4	6586400‡
32	-0.025 -0.087	44.0	+0.16 +0.00	38.0	+0.16 +0.00	6.0	9.0	2233500
35	-0.025 -0.087	47.0	+0.16 +0.00	41.0	+0.16 +0.00	6.0	9.0	2233600
36	-0.025 -0.087	44.0	+0.16 +0.00	41.5	+0.16 +0.00	5.0	6.4	6586500‡
36	-0.025 -0.087	48.0	+0.16 +0.00	42.0	+0.16 +0.00	6.0	9.0	2233700
40	-0.025 -0.087	48.0	+0.16 +0.00	45.5	+0.16 +0.00	5.0	6.4	6586600‡
40	-0.025 -0.087	52.0	+0.19 +0.00	46.0	+0.16 +0.00	6.0	9.0	2233800
42	-0.025 -0.087	54.0	+0.19 +0.00	48.0	+0.16 +0.00	6.0	9.0	2233900
45	-0.025 -0.087	53.0	+0.19 +0.00	50.5	+0.19 +0.00	5.0	6.4	6586700‡
45	-0.025 -0.087	57.0	+0.19 +0.00	51.0	+0.19 +0.00	6.0	9.0	2234000
50	-0.025 -0.087	58.0	+0.19 +0.00	55.5	+0.19 +0.00	5.0	6.4	6586800‡
50	-0.025 -0.087	62.0	+0.19 +0.00	55.0	+0.19 +0.00	6.0	9.0	2234200

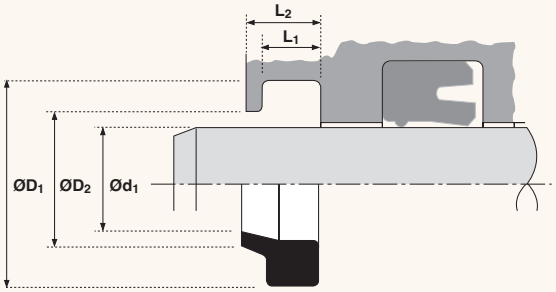

Ød1	TOL f9	ØD1	TOL H11	ØD2	TOL H11	L1 +0.2 - 0	L2	PART No.
55	-0.030 -0.104	67.0	+0.19 +0.00	61.0	+0.19 +0.00	6.0	9.0	2234300
56	-0.030 -0.104	66.0	+0.19 +0.00	63.0	+0.19 +0.00	6.3	8.1	6586900‡
56	-0.030 -0.104	68.0	+0.19 +0.00	62.0	+0.19 +0.00	6.0	9.0	2234400
60	-0.030 -0.104	72.0	+0.19 +0.00	66.0	+0.19 +0.00	6.0	9.0	2234500
63	-0.030 -0.104	73.0	+0.19 +0.00	70.0	+0.19 +0.00	6.3	8.1	6587000‡
63	-0.030 -0.104	75.0	+0.19 +0.00	69.0	+0.19 +0.00	6.0	9.0	2234600
65	-0.030 -0.104	77.0	+0.19 +0.00	71.0	+0.19 +0.00	6.0	9.0	2234700
70	-0.030 -0.104	80.0	+0.19 +0.00	77.0	+0.19 +0.00	6.3	8.1	6587100‡
70	-0.030 -0.104	82.0	+0.22 +0.00	76.0	+0.19 +0.00	6.0	9.0	2234800
80	-0.030 -0.104	90.0	+0.22 +0.00	87.0	+0.22 +0.00	6.3	8.1	6587200‡
90	-0.036 -0.123	100.0	+0.22 +0.00	97.0	+0.22 +0.00	6.3	8.1	6587300‡
90	-0.036 -0.123	106.0	+0.22 +0.00	98.0	+0.22 +0.00	8.0	12.0	2235200
100	-0.036 -0.123	115.0	+0.22 +0.00	110.0	+0.22 +0.00	9.5	12.5	6587400‡
100	-0.036 -0.123	116.0	+0.22 +0.00	108.0	+0.22 +0.00	8.0	12.0	2235300
105	-0.036 -0.123	121.0	+0.25 +0.00	113.0	+0.22 +0.00	8.0	12.0	2235400
110	-0.036 -0.123	125.0	+0.25 +0.00	120.0	+0.22 +0.00	9.5	12.5	6587500‡
125	-0.043 -0.143	140.0	+0.25 +0.00	135.0	+0.25 +0.00	9.5	12.5	6587600‡
140	-0.043 -0.143	155.0	+0.25 +0.00	150.0	+0.25 +0.00	9.5	12.5	6587700‡
140	-0.043 -0.143	156.0	+0.25 +0.00	148.0	+0.25 +0.00	8.0	12.0	1222800
150	-0.043 -0.143	166.0	+0.25 +0.00	158.0	+0.25 +0.00	8.0	12.0	1222900
160	-0.043 -0.143	175.0	+0.25 +0.00	170.0	+0.25 +0.00	9.5	12.5	6587800‡
160	-0.043 -0.143	176.0	+0.25 +0.00	168.0	+0.25 +0.00	8.0	12.0	1223000
180	-0.043 -0.143	200.0	+0.29 +0.00	190.0	+0.29 +0.00	10.0	15.0	1226300

33

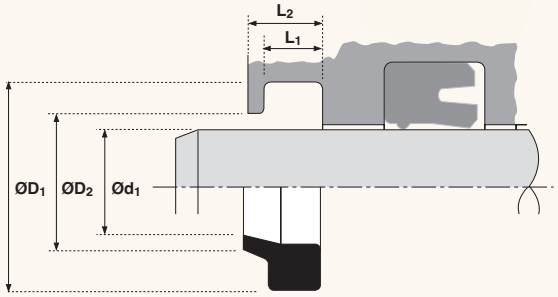

Ød1	TOL f9	ØD1	TOL H11	ØD2	TOL H11	L1 +0.2 - 0	L2	PART No.
190	-0.050 -0.165	210.0	+0.29 +0.00	200.0	+0.29 +0.00	10.0	15.0	1226400
200	-0.050 -0.165	220.0	+0.29 +0.00	210.0	+0.29 +0.00	10.0	15.0	1226500
220	-0.050 -0.165	240.0	+0.29 +0.00	233.5	+0.29 +0.00	12.5	16.6	6588100‡

Hallite
Fenner Advanced Sealing Technologies

OTP®

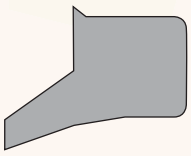

38

Technical details

	Metric		Inch	
Operating conditions				
Maximum Speed	4.0 m/sec		12.0 ft/sec	
Temperature Range	-40°C +120°C		-40°F +250°F	
Surface roughness	µmRa	µmRt	µinCLA	µinRMS
Dynamic Sealing Face Ød$_1$	0.1 <> 0.4	4 max	4 <> 16	5 <> 18
Static Sealing Face ØD$_1$ ØD$_2$	1.6 max	10 max	63 max	70 max
Static Housing Faces L$_1$	3.2 max	16 max	125 max	140 max
Radii				
Rod Diameter Ød$_1$ mm	≤ 50	≤ 90	≤ 200	> 200
Max Fillet Rad r$_1$ mm	0.4	0.4	0.4	0.8
Max Fillet Rad r2 mm	0.2	0.4	0.6	0.8
Tolerances	Ød$_1$	ØD$_1$	ØD$_2$	L$_1$ mm
	f9	H11	H11	+0.2-0

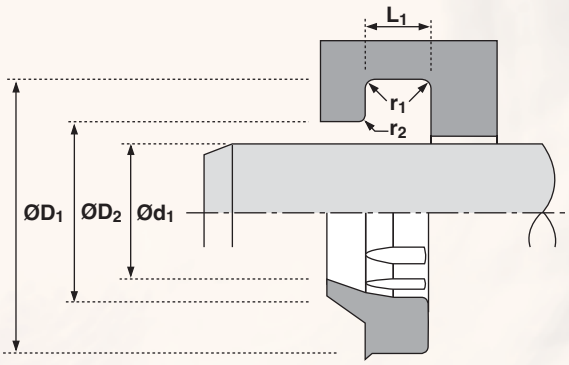

Design

The Hallite 38 wiper has been designed so that the proportions of the wiping lip ensure it maintains contact with the rod surface to remove heavily deposited mud, ice etc. The outside diameter contacts the housing and has a sealing lip to prevent moisture entering the groove.
A polyester based material is used to provide a tough abrasion resistant wiper for the difficult conditions usually found in mining or earth moving applications. All the range can be used with a split housing, however, the majority can be installed in a blind housing with care.

Features

- **Outside lip for effective housing seal**
- **Pressure relief ribs**
- **Effective scraping lip**

NB: Part numbers suffixed by "‡" indicate housing sizes to meet ISO 6195A.

38

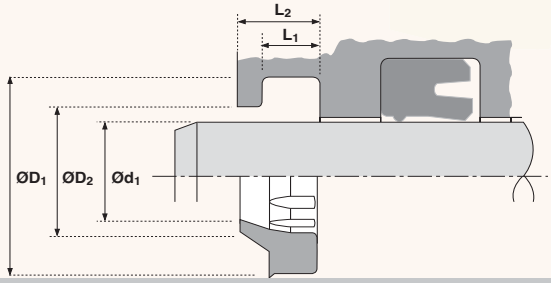

Ød1	TOL f9	ØD1	TOL H11	ØD2	TOL H11	L1 +0.2 - 0	L2	PART No.
18	-0.016 -0.059	24.0	+0.13 +0.00	21.0	+0.13 +0.00	5.0	7.0	4392000
20	-0.020 -0.072	28.0	+0.13 +0.00	25.5	+0.13 +0.00	5.0	8.0	4321900‡
22	-0.020 -0.072	30.0	+0.13 +0.00	27.5	+0.13 +0.00	5.0	8.0	4322000‡
25	-0.020 -0.072	33.0	+0.16 +0.00	30.5	+0.16 +0.00	5.0	8.0	6617700‡
28	-0.020 -0.072	36.0	+0.16 +0.00	33.5	+0.16 +0.00	5.0	8.0	6617800‡
30	-0.020 -0.072	38.0	+0.16 +0.00	35.5	+0.16 +0.00	5.0	8.0	4419200
30	-0.020 -0.072	41.2	+0.16 +0.00	37	+0.16 +0.00	7.5	10.0	4528900
32	-0.025 -0.087	40.0	+0.16 +0.00	37.5	+0.16 +0.00	5.0	8.0	6617900‡
35	-0.025 -0.087	43.0	+0.16 +0.00	40.5	+0.16 +0.00	5.0	8.0	4724800
36	-0.025 -0.087	44.0	+0.16 +0.00	41.5	+0.16 +0.00	5.0	8.0	6618000‡
40	-0.025 -0.087	48.0	+0.16 +0.00	45.5	+0.16 +0.00	5.0	8.0	6618100‡
40	-0.025 -0.087	50.6	+0.16 +0.00	43.0	+0.16 +0.00	5.3	7.0	4784100
41.28	-0.025 -0.087	49.28	+0.16 +0.00	46.8	+0.16 +0.00	5.0	8.0	4599900
45	-0.025 -0.087	53.0	+0.19 +0.00	50.5	+0.19 +0.00	5.0	8.0	6618200‡
45	-0.025 -0.087	55.6	+0.19 +0.00	48.0	+0.16 +0.00	5.3	7.0	4531201
50	-0.025 -0.087	58.0	+0.19 +0.00	55.5	+0.19 +0.00	5.0	8.0	6618300‡
50	-0.025 -0.087	58.6	+0.19 +0.00	53.0	+0.19 +0.00	5.3	7.0	4300400
50	-0.025 -0.087	60.6	+0.19 +0.00	53.0	+0.19 +0.00	5.3	7.0	4458000
55	-0.030 -0.104	65.6	+0.19 +0.00	58.0	+0.19 +0.00	5.3	7.0	4531401
56	-0.030 -0.104	66.0	+0.19 +0.00	63.0	+0.19 +0.00	6.3	10.0	6618400‡
56	-0.030 -0.104	66.6	+0.19 +0.00	59.0	+0.19 +0.00	5.3	7.0	4458100
60	-0.030 -0.104	70.0	+0.19 +0.00	66.0	+0.19 +0.00	5.3	7.0	4386200
60	-0.030 -0.104	70.0	+0.19 +0.00	67.0	+0.19 +0.00	6.3	10.0	4270200

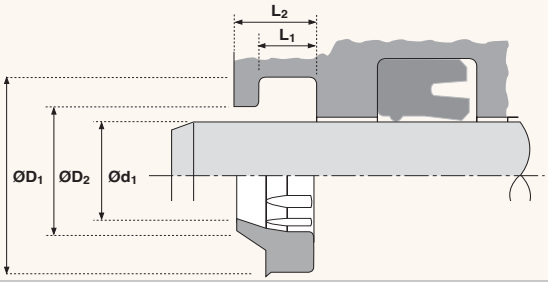

38

Ød1	TOL f9	ØD1	TOL H11	ØD2	TOL H11	L1 +0.2 - 0	L2	PART No.
60	-0.030 -0.104	70.6	+0.19 +0.00	63.0	+0.19 +0.00	5.3	7.0	4456400
63	-0.030 -0.104	73.0	+0.19 +0.00	70.0	+0.19 +0.00	6.3	10.0	6618500‡
63	-0.030 -0.104	73.6	+0.19 +0.00	66.0	+0.19 +0.00	5.3	7.0	4283600
65	-0.030 -0.104	75.0	+0.19 +0.00	72.0	+0.19 +0.00	6.3	10.0	4343800
65	-0.030 -0.104	75.6	+0.19 +0.00	68.0	+0.19 +0.00	5.3	7.0	4784200
70	-0.030 -0.104	80.0	+0.19 +0.00	77.0	+0.19 +0.00	6.3	10.0	6618600‡
70	-0.030 -0.104	80.6	+0.22 +0.00	73.0	+0.19 +0.00	5.3	7.0	4454000
70	-0.030 -0.104	82.2	+0.22 +0.00	76.0	+0.19 +0.00	7.2	12.0	4243900
75	-0.030 -0.104	83.6	+0.22 +0.00	78.0	+0.19 +0.00	5.3	7.0	4539500
75	-0.030 -0.104	85.0	+0.22 +0.00	82.0	+0.22 +0.00	6.3	10.0	4532500
75	-0.030 -0.104	87.2	+0.22 +0.00	81.0	+0.22 +0.00	7.2	12.0	4384400
80	-0.030 -0.104	90.0	+0.22 +0.00	87.0	+0.22 +0.00	6.3	10.0	6618700‡
80	-0.030 -0.104	91.0	+0.22 +0.00	85.0	+0.22 +0.00	7.5	11.0	4493200
80	-0.030 -0.104	92.2	+0.22 +0.00	86.0	+0.22 +0.00	7.2	12.0	4242800
82.6	-0.036 -0.123	92.2	+0.22 +0.00	85.7	+0.22 +0.00	5.3	7.1	4415500
85	-0.036 -0.123	93.6	+0.22 +0.00	88.0	+0.22 +0.00	5.3	7.0	4292100
85	-0.036 -0.123	97.2	+0.22 +0.00	91.0	+0.22 +0.00	7.2	12.0	4784300
85	-0.036 -0.123	98.0	+0.22 +0.00	92.0	+0.22 +0.00	7.5	11.5	4332800
88	-0.036 -0.123	100.2	+0.22 +0.00	94.0	+0.22 +0.00	7.2	12.0	4269400
90	-0.036 -0.123	100.0	+0.22 +0.00	97.0	+0.22 +0.00	6.3	10.0	6618800‡
90	-0.036 -0.123	102.2	+0.22 +0.00	96.0	+0.22 +0.00	7.2	12.0	4324500
95	-0.036 -0.123	107.2	+0.22 +0.00	101.0	+0.22 +0.00	7.2	12.0	6667600
100	-0.036 -0.123	110.6	+0.22 +0.00	104.0	+0.22 +0.00	5.3	7.0	4300200

38

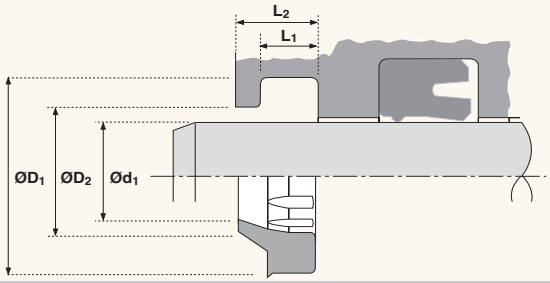

Ød1	TOL f9	ØD1	TOL H11	ØD2	TOL H11	L1 +0.2 - 0	L2	PART No.
100	-0.036 -0.123	112.2	+0.22 +0.00	106.0	+0.22 +0.00	7.2	12.0	4324600
100	-0.036 -0.123	115.0	+0.22 +0.00	110.0	+0.22 +0.00	9.5	14.0	6618900‡
101.6	-0.036 -0.123	116.6	+0.22 +0.00	111.6	+0.22 +0.00	9.5	14.0	6619010
105	-0.036 -0.123	113.0	+0.22 +0.00	110.5	+0.22 +0.00	5.0	8.0	4290300
105	-0.036 -0.123	120.0	+0.22 +0.00	112.0	+0.22 +0.00	7.2	12.0	4539100
110	-0.036 -0.123	122.2	+0.25 +0.00	116.0	+0.22 +0.00	7.2	12.0	4459200
110	-0.036 -0.123	125.0	+0.25 +0.00	120.0	+0.22 +0.00	9.5	14.0	6619000‡
115	-0.036 -0.123	127.2	+0.25 +0.00	121.0	+0.25 +0.00	7.2	12.0	4324800
120	-0.036 -0.123	132.2	+0.25 +0.00	126.0	+0.25 +0.00	7.2	12.0	4454300
120	-0.036 -0.123	135.0	+0.25 +0.00	130.0	+0.25 +0.00	9.5	14.0	4385600
125	-0.043 -0.143	133.0	+0.25 +0.00	130.8	+0.25 +0.00	5.3	7.0	4393000
125	-0.043 -0.143	137.2	+0.25 +0.00	131.0	+0.25 +0.00	7.7	12.0	4233500
125	-0.043 -0.143	140.0	+0.25 +0.00	135.0 .	+0.25 +0.00	9.5	14.0	6619100‡
125	-0.043 -0.143	140.0	+0.25 +0.00	132.6 .	+0.25 +0.00	10.2	16.0	4784400
128	-0.043 -0.143	143.0	+0.25 +0.00	138.0	+0.25 +0.00	9.5	14.0	4581800
130	-0.043 -0.143	142.2	+0.25 +0.00	136.0	+0.25 +0.00	7.2	12.0	4304300
130	-0.043 -0.143	145.0	+0.25 +0.00	137.6	+0.25 +0.00	10.2	16.0	4784500
132	-0.043 -0.143	144.2	+0.25 +0.00	138.0	+0.25 +0.00	7.2	12.0	4269500
135	-0.043 -0.143	150.0	+0.25 +0.00	145.0	+0.25 +0.00	9.5	14.0	4278700
140	-0.043 -0.143	148.6	+0.25 +0.00	143.0	+0.25 +0.00	5.3	7.0	4763800
140	-0.043 -0.143	152.2	+0.25 +0.00	146.0	+0.25 +0.00	7.7	12.0	4324900
140	-0.043 -0.143	155.0	+0.25 +0.00	150.0	+0.25 +0.00	9.5	14.0	6619200‡
140	-0.043 -0.143	155.0	+0.25 +0.00	147.6	+0.25 +0.00	10.2	16.0	4784600

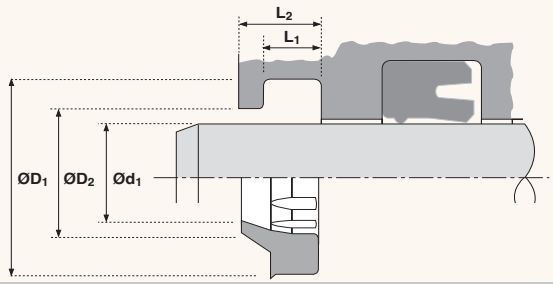

38

Ød1	TOL f9	ØD1	TOL H11	ØD2	TOL H11	L1 +0.2 - 0	L2	PART No.
145	-0.043 -0.143	153.6	+0.25 +0.00	148.0	+0.25 +0.00	5.3	7.0	4732200
145	-0.043 -0.143	160.0	+0.25 +0.00	155.0	+0.25 +0.00	9.5	14.0	4560600
150	-0.043 -0.143	162.2	+0.25 +0.00	156.0	+0.25 +0.00	7.7	12.0	4278900
150	-0.043 -0.143	165.0	+0.25 +0.00	158.0	+0.25 +0.00	7.2	12.0	6668500
150	-0.043 -0.143	165.0	+0.25 +0.00	157.6	+0.25 +0.00	10.2	18.0	4342500
150	-0.043 -0.143	166.0	+0.25 +0.00	161.0	+0.25 +0.00	8.0	12.0	4336700
155	-0.043 -0.143	163.0	+0.25 +0.00	160.5	+0.25 +0.00	5.0	8.0	4290200
155	-0.043 -0.143	167.2	+0.25 +0.00	161.0	+0.25 +0.00	7.7	12.0	4288200
155	-0.043 -0.143	175.0	+0.25 +0.00	165.0	+0.25 +0.00	10.2	18.0	4226400
160	-0.043 -0.143	172.2	+0.25 +0.00	166.0	+0.25 +0.00	7.7	12.0	4405700
160	-0.043 -0.143	175.0	+0.25 +0.00	170.0	+0.25 +0.00	9.5	14.0	6619300‡
160	-0.043 -0.143	175.0	+0.25 +0.00	167.6	+0.25 +0.00	10.2	16.0	4454100
165	-0.043 -0.143	180.0	+0.25 +0.00	175.0	+0.25 +0.00	9.5	14.0	4537000
170	-0.043 -0.143	180.6	+0.29 +0.00	174.0	+0.25 +0.00	5.3	7.0	4732300
170	-0.043 -0.143	182.2	+0.29 +0.00	176.0	+0.25 +0.00	7.7	12.0	4233600
170	-0.043 -0.143	185.0	+0.29 +0.00	180.0	+0.25 +0.00	9.5	14.0	4745100
177	-0.043 -0.143	192.0	+0.29 +0.00	187.0	+0.29 +0.00	9.5	14.0	4287900
180	-0.043 -0.143	195.0	+0.29 +0.00	190.0	+0.29 +0.00	9.5	14.0	6619400‡
180	-0.043 -0.143	200.0	+0.29 +0.00	190.0	+0.29 +0.00	10.2	18.0	4460900
185	-0.050 -0.165	200.0	+0.29 +0.00	192.6	+0.29 +0.00	10.2	16.0	4777300
185	-0.050 -0.165	205.0	+0.29 +0.00	195.0	+0.29 +0.00	10.2	18.0	4776100
190	-0.050 -0.165	198.6	+0.29 +0.00	193.0	+0.29 +0.00	5.3	7.0	4771100
190	-0.050 -0.165	205.0	+0.29 +0.00	200.0	+0.29 +0.00	9.5	14.0	4753100

38

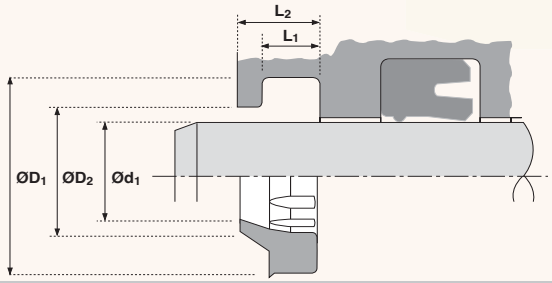

Ød1	TOL f9	ØD1	TOL H11	ØD2	TOL H11	L1 +0.2 - 0	L2	PART No.
190	-0.050 -0.165	210.0	+0.29 +0.00	200.0	+0.29 +0.00	10.2	18.0	4781000
195	-0.050 -0.165	210.0	+0.29 +0.00	202.5	+0.29 +0.00	10.2	16.0	4325100
200	-0.050 -0.165	208.6	+0.29 +0.00	203.0	+0.29 +0.00	5.3	7.0	4391600
200	-0.050 -0.165	215.0	+0.29 +0.00	210.0	+0.29 +0.00	9.5	14.0	6619500‡
200	-0.050 -0.165	220.0	+0.29 +0.00	210.0	+0.29 +0.00	10.2	18.0	4387100
205	-0.050 -0.165	213.6	+0.29 +0.00	208.0	+0.29 +0.00	5.3	7.0	4773800
205	-0.050 -0.165	220.0	+0.29 +0.00	215.0	+0.29 +0.00	9.5	14.0	4560500
210	-0.050 -0.165	225.0	+0.29 +0.00	220.0	+0.29 +0.00	9.5	14.0	4598000
210	-0.050 -0.165	226.0	+0.29 +0.00	221.0	+0.29 +0.00	9.0	12.0	4336600
210	-0.050 -0.165	230.0	+0.29 +0.00	220.0	+0.29 +0.00	10.2	18.0	4325300
212	-0.050 -0.165	232.0	+0.29 +0.00	225.5	+0.29 +0.00	12.5	18.0	4293900
220	-0.050 -0.165	235.0	+0.29 +0.00	227.6	+0.29 +0.00	10.2	16.0	4325400
220	-0.050 -0.165	240.0	+0.29 +0.00	230.0	+0.29 +0.00	10.2	18.0	4799000
220	-0.050 -0.165	240.0	+0.29 +0.00	233.5	+0.29 +0.00	12.5	18.0	6619600‡
225	-0.050 -0.165	240.0	+0.29 +0.00	235.0	+0.29 +0.00	9.5	14.0	4287800
225	-0.050 -0.165	245.0	+0.29 +0.00	235.0	+0.29 +0.00	10.2	18.0	4325500
230	-0.050 -0.165	238.6	+0.29 +0.00	233.0	+0.29 +0.00	5.3	7.0	4514000
230	-0.050 -0.165	245.0	+0.29 +0.00	240.0	+0.29 +0.00	9.5	14.0	4767400
230	-0.050 -0.165	246.0	+0.29 +0.00	240.7	+0.29 +0.00	7.5	12.0	4290700
230	-0.050 -0.165	250.0	+0.29 +0.00	240.0	+0.29 +0.00	10.2	18.0	4325600
235	-0.050 -0.165	255.0	+0.32 +0.00	245.0	+0.29 +0.00	10.2	18.0	4325700
240	-0.050 -0.165	255.0	+0.32 +0.00	250.0	+0.29 +0.00	9.5	14.0	4745200
240	-0.050 -0.165	260.0	+0.32 +0.00	250.0	+0.29 +0.00	10.2	18.0	4520900

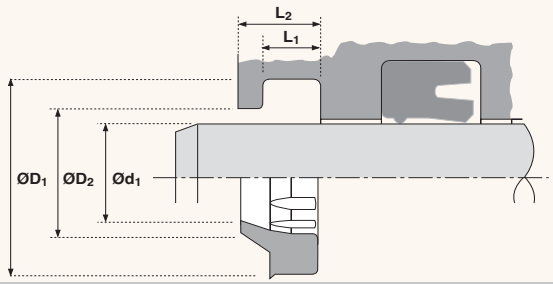

38

Ød1	TOL f9	ØD1	TOL H11	ØD2	TOL H11	L1 +0.2 - 0	L2	PART No.
240	-0.050 -0.165	260.0	+0.32 +0.00	253.5	+0.29 +0.00	12.5	18.0	4787100
245	-0.050 -0.165	265.0	+0.32 +0.00	258.5	+0.32 +0.00	12.5	18.0	4539600
250	-0.050 -0.165	270.0	+0.32 +0.00	260.0	+0.32 +0.00	10.2	18.0	4460100
250	-0.050 -0.165	270.0	+0.32 +0.00	263.5	+0.32 +0.00	12.5	18.0	6619700‡
255	-0.056 -0.186	270.0	+0.32 +0.00	265.0	+0.32 +0.00	9.5	14.0	4578200
260	-0.056 -0.186	275.0	+0.32 +0.00	270.0	+0.32 +0.00	9.5	14.0	4573100
260	-0.056 -0.186	280.0	+0.32 +0.00	270.0	+0.32 +0.00	10.2	18.0	4325900
265	-0.056 -0.186	280.0	+0.32 +0.00	272.6	+0.32 +0.00	10.2	16.0	4762900
265	-0.056 -0.186	285.0	+0.32 +0.00	275.0	+0.32 +0.00	10.2	15.0	4560400
270	-0.056 -0.186	278.6	+0.32 +0.00	273.0	+0.32 +0.00	5.3	7.0	4391700
270	-0.056 -0.186	286.0	+0.32 +0.00	280.7	+0.32 +0.00	7.5	12.0	4786400
275	-0.056 -0.186	295.0	+0.32 +0.00	285.0	+0.32 +0.00	10.2	18.0	4807400
280	-0.056 -0.186	295.0	+0.32 +0.00	290.0	+0.32 +0.00	9.5	14.0	4716100
280	-0.056 -0.186	300.0	+0.32 +0.00	290.0	+0.32 +0.00	10.2	15.0	4763900
285	-0.056 -0.186	300.0	+0.32 +0.00	295.0	+0.32 +0.00	9.5	14.0	4767300
285	-0.056 -0.186	305.0	+0.32 +0.00	298.5	+0.32 +0.00	12.5	18.0	4537100
288	-0.056 -0.186	308.0	+0.32 +0.00	301.5	+0.32 +0.00	10.2	15.0	4265300
290	-0.056 -0.186	310.0	+0.32 +0.00	303.5	+0.32 +0.00	12.5	18.0	4467300
295	-0.056 -0.186	315.0	+0.32 +0.00	308.5	+0.32 +0.00	12.5	18.0	4598100
300	-0.056 -0.186	316.0	+0.36 +0.00	310.7	+0.32 +0.00	7.5	12.0	4290800
300	-0.056 -0.186	320.0	+0.36 +0.00	313.5	+0.32 +0.00	12.5	18.0	4525300
305	-0.056 -0.186	325.0	+0.36 +0.00	318.5	+0.36 +0.00	12.5	18.0	4473200
320	-0.062 -0.202	340.0	+0.36 +0.00	330.0	+0.36 +0.00	10.2	18.0	4454200

38

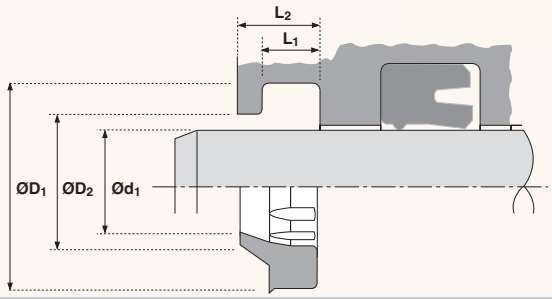

Ød1	TOL f9	ØD1	TOL H11	ØD2	TOL H11	L1 +0.2 - 0	L2	PART No.
325	-0.062 -0.202	345.0	+0.36 +0.00	335.0	+0.36 +0.00	10.2	18.0	4801100
330	-0.062 -0.202	346.0	+0.36 +0.00	340.7	+0.36 +0.00	7.5	12.0	4587300
335	-0.062 -0.202	355.0	+0.36 +0.00	345.0	+0.36 +0.00	10.2	18.0	4776800
340	-0.062 -0.202	360.0	+0.36 +0.00	350.0	+0.36 +0.00	10.2	18.0	4732500
350	-0.062 -0.202	370.0	+0.36 +0.00	360.0	+0.36 +0.00	10.2	18.0	4717900
355	-0.062 -0.202	375.0	+0.36 +0.00	365.0	+0.36 +0.00	10.2	18.0	4578300
360	-0.062 -0.202	380.0	+0.36 +0.00	370.0	+0.36 +0.00	10.2	18.0	4781200
370	-0.062 -0.202	390.0	+0.36 +0.00	383.5	+0.36 +0.00	12.5	18.0	4579800
370	-0.062 -0.202	390.0	+0.36 +0.00	380.0	+0.36 +0.00	10.2	18.0	4763000
380	-0.062 -0.202	400.0	+0.36 +0.00	393.5	+0.36 +0.00	12.5	18.0	4752100
395	-0.062 -0.202	415.0	+0.40 +0.00	405.0	+0.40 +0.00	10.2	18.0	4807200
400	-0.062 -0.202	420.0	+0.40 +0.00	410.0	+0.40 +0.00	10.2	18.0	4769900
415	-0.068 -0.223	435.0	+0.40 +0.00	425.0	+0.40 +0.00	10.2	18.0	4820800
455	-0.068 -0.223	475.0	+0.40 +0.00	465.0	+0.40 +0.00	10.2	18.0	4777900
470	-0.068 -0.223	490.0	+0.40 +0.00	480.0	+0.40 +0.00	10.2	18.0	4814800

50

Technical details

	Metric		Inch	
Operating conditions				
Maximum Speed	0.5 m/sec		1.5 ft/sec	
Temperature Range	-30°C +100°C		-22°F +212°F	
Maximum Pressure	350 bar		5000 p.s.i.	
Surface roughness	µmRa	µmRt	µinCLA	µinRMS
Dynamic Sealing Face $ØD_1$	0.1 <> 0.4	4 max	4 <> 16	5 <> 18
Static Sealing Face $Ød_1$ $Ød_2$	1.6 max	10 max	63 max	70 max
Static Housing Faces $Ød_3$ L_1 L_2	3.2 max	16 max	125 max	140 max
Chamfers & Radii				
Groove Section ≤ S mm	4.0	5.0	7.5	10.0
Min Chamfer C mm	2.0	2.5	4.0	5.0
Max Fillet Rad r_1 mm	0.4	0.4	0.4	0.4
Max Fillet Rad r_2 mm	0.4	0.4	0.4	0.4

Tolerances	$ØD_1$	$Ød_1$	$Ød_2$	$Ød_3$	L_1	L_2
mm	H10	h9	h9	h11	+0.35 +0.1	+0.1 -0

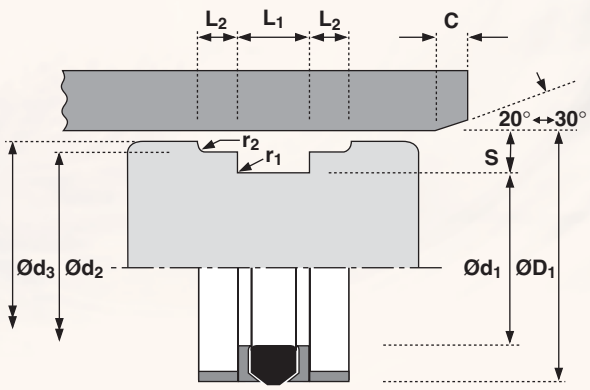

Design

The Hallite 50 is a double acting seal designed for light duty applications using either one piece or split pistons to ISO 6547 housings.

It comprises a rubber seal, two split support rings and two split bearings, located either side of the seal. The nitrile rubber seal has proved itself to be extremely wear resistant in service.

It is designed to be compressed by the housing to ensure a low pressure seal and when pressurised be protected from extrusion damage by the extending lips of the support ring. A tough flexible polymer is used for the support ring which is scarf cut for assembly and to protect the seal from damage.

A rectangular reinforced nylon bearing completes the assembly and provides the seal and piston with support and guidance.

The proportions of this range of piston seals have been determined to give a satisfactory performance when used with the recommended operating conditions.

Note: Other sizes of this design of seal are shown under Hallite 53, 64 and 68.

Features

- **Compact groove design**
- **Easy assembly**
- **Positive no drift seal**

NB: Part numbers suffixed by "‡" indicate housing sizes to meet ISO 6547.

50

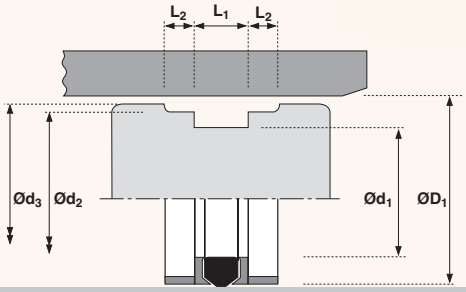

$ØD_1$	TOL H10	$Ød_1$	TOL h9	$Ød_2$	TOL h9	$Ød_3$	TOL h11	L_1 + 0.35 + 0.1	L_2 + 0.1 - 0	PART No.
25	+0.08 +0.00	17	+0.00 -0.04	22.0	+0.000 -0.052	24.0	+0.00 -0.13	10.0	4.0	6607810‡
32	+0.10 +0.00	24	+0.00 -0.05	29.0	+0.000 -0.052	31.0	+0.00 -0.16	10.0	4.0	6607910‡
40	+0.10 +0.00	32	+0.00 -0.06	37.0	+0.000 -0.062	39.0	+0.00 -0.16	10.0	4.0	6608010‡
50	+0.10 +0.00	40	+0.00 -0.06	47.0	+0.000 -0.062	49.0	+0.00 -0.16	12.5	4.0	6608110‡
63	+0.12 +0.00	53	+0.00 -0.07	60.0	+0.000 -0.074	62.0	+0.00 -0.19	12.5	4.0	2199513‡
80	+0.12 +0.00	65	+0.00 -0.07	76.0	+0.000 -0.074	78.5	+0.00 -0.19	20.0	5.0	6608210‡
100	+0.14 +0.00	85	+0.00 -0.09	96.0	+0.000 -0.087	98.5	+0.00 -0.22	20.0	5.0	6608310‡
125	+0.16 +0.00	105	+0.00 -0.09	120.0	+0.000 -0.087	123.0	+0.00 -0.25	25.0	6.3	6608410‡
140	+0.16 +0.00	120	+0.00 -0.09	135.0	+0.000 -0.087	138.0	+0.00 -0.25	25.0	6.3	2317030
160	+0.16 +0.00	140	+0.00 -0.10	155.0	+0.000 -0.100	158.0	+0.00 -0.25	25.0	6.3	6608510‡

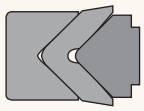

Technical details

	Metric		Inch	
Operating conditions				
Maximum Speed	0.5 m/sec		1.5 ft/sec	
Temperature Range	-30°C +100°C		-22°F +212°F	
Maximum Pressure	700 bar		10,000 p.s.i.	
Maximum extrusion gap	**Figures show the maximum permissible gap all on one side using minimum rod Ø and maximum clearance Ø. Refer to Housing Design section**			
Pressure bar	160	250	400	700
Maximum Gap mm	0.35	0.3	0.2	0.1
Pressure p.s.i.	2400	3750	6000	10,000
Surface roughness	µmRa	µmRt	µinCLA	µinRMS
Dynamic Sealing Face ØD_{d1}	0.1 <> 0.4	4 max	4 <> 16	5 <> 18
Static Sealing Face Ød_1	1.6 max	10 max	63 max	70 max
Static Housing Faces L_1	3.2 max	16 max	125 max	140 max
Chamfers & Radii				
Groove Section ≤ S mm	7.5	10.0	12.5	15.0
Min Chamfer C mm	4.0	5.0	6.5	7.5
Max Fillet Rad r_2 mm	0.8	1.2	1.6	1.6
Tolerances	ØD_1	Ød_1	Ød_3	L_1
mm	H9	h11	+0 -0.3	+0.25 -0

51

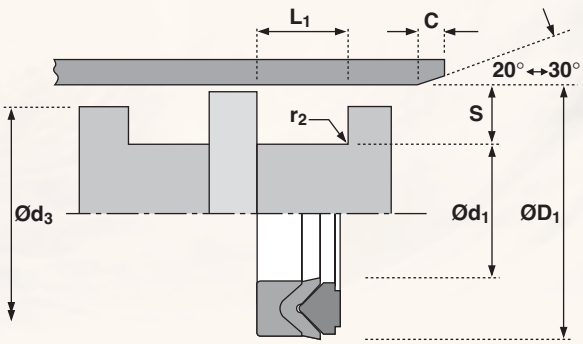

Design

The Hallite 51 is a heavy duty piston seal which, when installed in pairs, provides an excellent double acting piston design. It is particularly suitable for difficult operating conditions such as pressure surging, vibration or some misalignment.

The seal is an assembly of three parts, a male adaptor, a V ring and a female adaptor. Both the V ring and the female adaptor are made from rubberised fabric which has durability and strength, it also retains lubricant at the sliding surfaces so friction and wear are kept to a minimum. The V ring being the primary seal is more flexible than the adaptor which supports it and prevents extrusion damage. At higher pressures the adaptor deforms and becomes a secondary seal.

The polyacetal male adaptor has grooves across the face to ensure pressure is evenly applied to the V ring.

Features

- **Effective seal for extreme applications**
- **Precision moulded vee packs**
- **High load capability**
- **Pressure activating grooves**

51

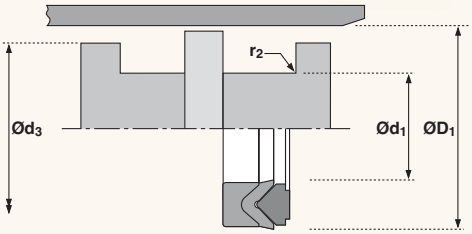

ØD1	TOL H9	Ød1	TOL h11	Ød3 Tol +0 -0.3	L1 +0.25-0	PART No.
30	+0.05 +0.00	20	+0.00 -0.13	29.0	9.30	4208310
40	+0.06 +0.00	25	+0.00 -0.13	39.0	11.50	4208010
50	+0.06 +0.00	35	+0.00 -0.16	49.0	11.50	4207610
55	+0.07 +0.00	40	+0.00 -0.16	54.0	11.50	4207110
60	+0.07 +0.00	45	+0.00 -0.16	59.0	11.50	4207210
63	+0.07 +0.00	48	+0.00 -0.16	62.0	13.00	4207410
70	+0.07 +0.00	50	+0.00 -0.16	68.5	15.20	4208210
80	+0.07 +0.00	60	+0.00 -0.19	78.5	15.20	4208110
90	+0.09 +0.00	70	+0.00 -0.19	88.5	21.20	4207710
100	+0.09 +0.00	80	+0.00 -0.19	98.5	21.20	4207510
110	+0.09 +0.00	90	+0.00 -0.22	108.5	21.20	4207910

ØD1	TOL H9	Ød1	TOL h11	Ød3 Tol +0 -0.3	L1 +0.25-0	PART No.
125	+0.10 +0.00	100	+0.00 -0.22	123.5	25.80	4207810
140	+0.10 +0.00	115	+0.00 -0.22	138.5	25.80	4208410
150	+0.10 +0.00	120	+0.00 -0.22	148.0	29.00	4208510
160	+0.10 +0.00	130	+0.00 -0.25	158.0	29.00	4208710
180	+0.10 +0.00	150	+0.00 -0.25	178.0	31.50	4208610
200	+0.12 +0.00	170	+0.00 -0.25	198.0	33.50	4209010
225	+0.12 +0.00	195	+0.00 -0.29	223.0	33.50	6582110
250	+0.12 +0.00	220	+0.00 -0.29	248.0	33.50	6582310
275	+0.13 +0.00	245	+0.00 -0.29	273.0	33.50	6582410
300	+0.13 +0.00	270	+0.00 -0.32	298.0	33.50	6582510
320	+0.14 +0.00	290	+0.00 -0.36	318.0	33.50	6582610

Hallite
Fenner Advanced Sealing Technologies

OTP®

52

Technical details

	Metric	Inch
Operating conditions		
Maximum Speed	0.8 m/sec	2.4 ft/sec
Temperature Range	-30°C +100°C	-22°F +212°F
Maximum Pressure	600 bar	9000 p.s.i.

Maximum extrusion gap

Figures show the maximum permissible gap all on one side using minimum rod Ø and maximum clearance Ø. Refer to Housing Design section.

Pressure bar	160	250	400	600
Maximum Gap mm	0.35	0.3	0.2	0.1
Pressure p.s.i.	2400	3750	6000	9000

Surface roughness	µmRa	µmRt	µinCLA	µinRMS
Dynamic Sealing Face $ØD_1$	0.1 <> 0.4	4 max	4 <> 16	5 <> 18
Static Sealing Face $Ød_1$	1.6 max	10 max	63 max	70 max
Static Housing Faces L_1	3.2 max	16 max	125 max	140 max

Chamfers & Radii					
Groove Section ≤ S mm	5.0	7.5	10.0	12.5	15.0
Min Chamfer C mm	2.5	4.0	5.0	6.5	7.5
Max Fillet Rad r_2 mm	0.8	0.8	0.8	1.2	1.6

Tolerances	$ØD_1$	$Ød_1$	$Ød_3$	L_1
mm	H9	h11	+0 -0.3	+0.3 -0

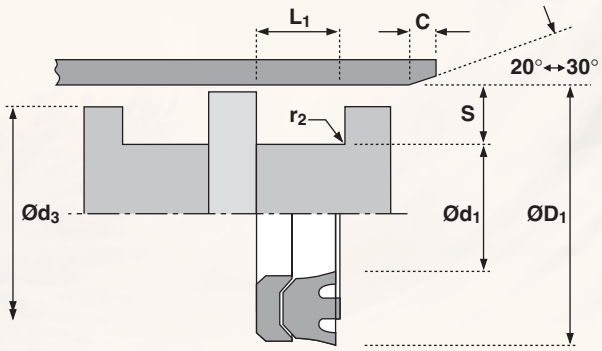

Design

The Hallite 52 is a two piece piston seal for heavy duty applications which, when installed in pairs, provides an excellent double-acting piston design. It is suitable for difficult operating conditions such as pressure surging, vibration or some misalignment .

Both parts are manufactured from rubberised fabric which gives strength and durability and retains lubrication to keep friction low and reduce wear.

By extending the centre of the seal past the sealing edges, they are protected from damage should inter-seal pressure force the seal against the housing wall. Grooves across the protruding face allow pressure to reach both sealing edges.

The support ring is manufactured from a hard rubberised fabric to protect the seal from extrusion damage. The 'U' shape of the ring provides a secondary seal as pressure deforms the lips to increase the sealing area.

NB: Part numbers suffixed by "‡" indicate housing sizes to meet ISO 5597.

Features

- **Effective seal for extreme applications**
- **Precision moulded vee packs**
- **High load capability**
- **Pressure activating grooves**

52

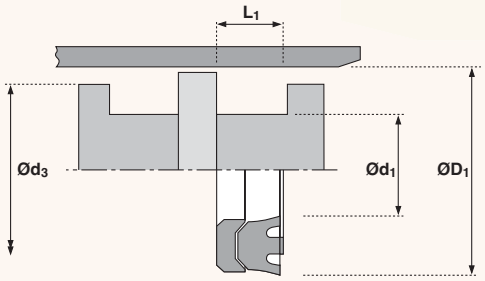

$ØD_1$	TOL H9	$Ød_1$	TOL h11	$Ød_3$ +0 -0.3	L_1 +0.3 -0	PART No.
25	+0.05 +0.00	15	+0.00 -0.11	24.0	6.30	6619810‡
32	+0.06 +0.00	20	+0.00 -0.13	31.0	7.80	1791610
32	+0.06 +0.00	22	+0.00 -0.13	31.0	6.30	6619910‡
40	+0.06 +0.00	25	+0.00 -0.13	39.0	10.00	2149810
40	+0.06 +0.00	30	+0.00 -0.13	39.0	6.30	6620010‡
45	+0.06 +0.00	30	+0.00 -0.13	44.0	10.00	2150010
50	+0.06 +0.00	35	+0.00 -0.16	49.0	9.50	2150210‡
55	+0.07 +0.00	40	+0.00 -0.16	54.0	10.00	2150410
60	+0.07 +0 00	45	+0.00 -0.16	59.0	10.00	2150610
63	+0.07 +0.00	48	+0.00 -0.16	62.0	9.50	2150810‡
70	+0.07 +0 00	50	+0.00 -0.16	68.5	13.00	2151010
80	+0.07 +0.00	60	+0.00 -0.19	78.5	12.50	2151210‡
90	+0.09 +0.00	70	+0.00 -0.19	88.5	13.00	2151410

$ØD_1$	TOL H9	$Ød_1$	TOL h11	$Ød_3$ +0 -0.3	L_1 +0.3 -0	PART No.
100	+0.09 +0.00	80	+0.00 -0.19	98.5	12.50	2151610‡
110	+0.09 +0.00	90	+0.00 -0.22	108.5	13.00	2151810
125	+0.10 +0.00	100	+0.00 -0.22	123.5	16.00	2152010‡
140	+0.10 +0.00	115	+0.00 -0.22	138.5	16.20	2152210
160	+0.10 +0.00	130	+0.00 -0.25	158.0	19.80	2152410
160	+0.10 +0.00	135	+0.00 -0.25	158.0	16.00	6620110‡
180	+0.10 +0.00	150	+0.00 -0.25	178.0	19.80	2152610
200	+0.12 +0.00	170	+0.00 -0.25	198.0	20.00	2152810‡
225	+0.12 +0.00	195	+0.00 -0.29	223.0	19.80	2197010
250	+0.12 +0.00	220	+0.00 -0.29	248.0	20.00	2197210‡
275	+0.13 +0.00	245	+0.00 -0.29	273.0	19.80	2197410
300	+0.13 +0.00	270	+0.00 -0.32	298.0	19.80	2188310

Hallite
Fenner Advanced Sealing Technologies

OTP®

53

Technical details

	Metric			Inch	
Operating conditions					
Maximum Speed	0.5 m/sec			1.5 ft/sec	
Temperature Range	-30°C +100°C			-22°F +212°F	
Maximum Pressure	500 bar			7500 p.s.i.	
Surface roughness	µmRa	µmRt		µinCLA	µinRMS
Dynamic Sealing Face $ØD_1$	0.1 <> 0.4	4 max		4 <> 16	5 <> 18
Static Sealing Face $Ød_1$ $Ød_2$	1.6 max	10 max		63 max	70 max
Static Housing Faces $Ød_3$ L_1 L_2	3.2 max	16 max		125 max	140 max

Chamfers & Radii						
Groove Section ≤ S mm	5.0	7.5	8.0	10.0	12.5	15.0
Min Chamfer C mm	2.4	4.0	5.0	5.0	6.5	7.5
Max Fillet Rad r_1 mm	0.4	0.4	0.4	0.4	0.8	0.8
Max Fillet Rad r_2 mm	0.4	0.4	0.4	0.4	0.8	0.8
Groove Section ≤ S in	0.312	0.375	0.500			
Min Chamfer C in	0.156	0.187	0.217			
Max Fillet Rad r_1 in	0.016	0.016	0.032			
Max Fillet Rad r_2 in	0.016	0.016	0.032			

Tolerances	$ØD_1$	$Ød_1$	$Ød_2$	$Ød_3$	L_1	L_2
mm	H11	h10	f9	h11	+0.4 +0.15	+0.1 -0
in	H11	h10	f9	h11	+0.016 +0.005	+0.004 -0

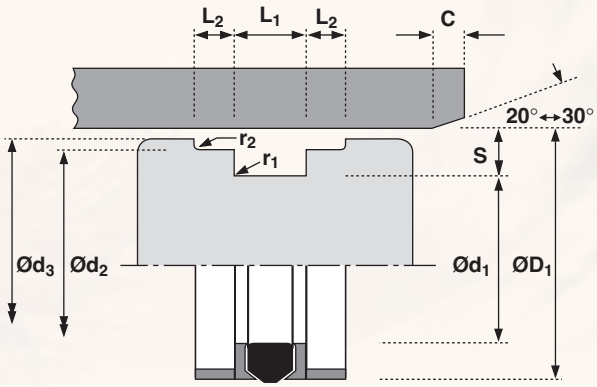

Design

A robust assembly designed specifically for one piece pistons, the Hallite 53 double acting seal uses a rubber sealing element which has proved itself in service to be extremely wear resistant and capable of working most effectively in a wide variety of medium duty applications. The seal is also suitable for two piece pistons.

The assembly comprises a rubber seal, two split support rings and two split bearings, one of each located either side of the seal.

The nitrile rubber seal is designed to have its section compressed by the housing, to ensure a low pressure seal and, when pressurised, be protected from extrusion damage by the extending lips of the support ring. The support ring is manufactured from a tough flexible polymer and scarf cut for assembly.

The proportions of the range have been determined to give a satisfactory performance when used with the recommended operating conditions.

Note: Other sizes of this design are shown under Hallite 50, 64 and 68. Also see Hallite 753 for interchangeable sizes.

Features

- **Well proven design**
- **Long life**

53

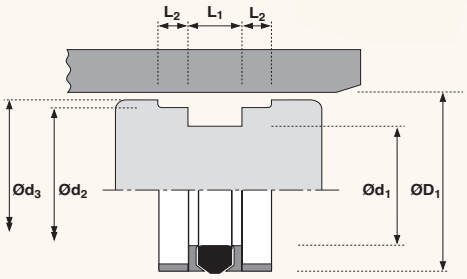

$ØD_1$	TOL H11	$Ød_1$	TOL h10	$Ød_2$	TOL f9	$Ød_3$	TOL h11	L_1 + 0.4 + 0.15	L_2 + 0.1 - 0	PART No.
25	+0.13 +0.00	17	+0.00 -0.07	22.1	-0.020 -0.072	24.0	+0.00 -0.13	8.0	4.00	2249212
32	+0.16 +0.00	22	+0.00 -0.08	28.5	-0.020 -0.072	31.0	+0.00 -0.16	10.0	5.00	2249312
40	+0.16 +0.00	30	+0.00 -0.08	36.5	-0.025 -0.087	39.0	+0.00 -0.16	10.0	5.00	2249412
45	+0.16 +0.00	35	+0.00 -0.10	40.4	-0.025 -0.087	44.0	+0.00 -0.16	16.4	6.35	2199411
50	+0.16 +0.00	34	+0.00 -0.10	45.4	-0.025 -0.087	49.0	+0.00 -0.16	18.0	6.35	0209912
50	+0.16 +0.00	35	+0.00 -0.10	46.0	-0.025 -0.087	49.0	+0.00 -0.16	15.0	7.5	0074012
55	+0.19 +0.00	39	+0.00 -0.10	50.4	-0.030 -0.104	54.0	+0.00 -0.19	18.0	6.35	1352212
60	+0.19 +0.00	44	+0.00 -0.10	55.4	-0.030 -0.104	58.5	+0.00 -0.19	18.0	6.35	1361412
63	+0.19 +0.00	47	+0.00 -0.10	58.4	-0.030 -0.104	61.5	+0.00 -0.19	19.0	6.35	0209712
65	+0.19 +0.00	50	+0.00 -0.10	60.4	-0.030 -0.104	63.5	+0.00 -0.19	18.0	6.35	1350512
70	+0.19 +0.00	50	+0.00 -0.10	64.0	-0.030 -0.104	68.0	+0.00 -0.19	22.0	10.00	0075112
70	+0.19 +0.00	50	+0.00 -0.10	64.2	-0.030 -0.104	68.0	+0.00 -0.19	22.0	6.35	0075122
75	+0.19 +0.00	55	+0.00 -0.12	69.0	-0.030 -0.104	73.0	+0.00 -0.19	22.0	10.00	0075612
75	+0.19 +0.00	55	+0.00 -0.12	69.2	-0.030 -0.104	73.0	+0.00 -0.19	22.0	6.35	0075622
80	+0.19 +0.00	60	+0.00 -0.12	74.0	-0.030 -0.104	78.0	+0.00 -0.19	22.0	10.00	0073812
80	+0.19 +0.00	60	+0.00 -0.12	74.2	-0.030 -0.104	78.0	+0.00 -0.19	22.0	6.35	0073822
85	+0.22 +0.00	65	+0.00 -0.12	79.2	-0.030 -0.104	83.0	+0.00 -0.22	22.0	6.35	0075722
90	+0.22 +0.00	70	+0.00 -0.12	84.0	-0.036 -0.123	88.0	+0.00 -0.22	22.0	10.00	0075812
90	+0.22 +0.00	70	+0.00 -0.12	84.2	-0.036 -0.123	88.0	+0.00 -0.22	22.0	6.35	0075822
95	+0.22 +0.00	75	+0.00 -0.12	89.2	-0.036 -0.123	93.0	+0.00 -0.22	22.0	6.35	1352512
100	+0.22 +0.00	75	+0.00 -0.12	93.2	-0.036 -0.123	98.0	+0.00 -0.22	22.0	6.35	0073712
100	+0.22 +0.00	80	+0.00 -0.12	94.0	-0.036 -0.123	98.0	+0.00 -0.22	22.0	10.00	0083612
105	+0.22 +0.00	80	+0.00 -0.12	98.1	-0.036 -0.123	103.0	+0.00 -0.22	22.0	6.35	1352812
110	+0.22 +0.00	85	+0.00 -0.14	103.1	-0.036 -0.123	108.0	+0.00 -0.22	22.0	6.35	0091113

Hallite
Fenner Advanced Sealing Technologies

OTP®

53

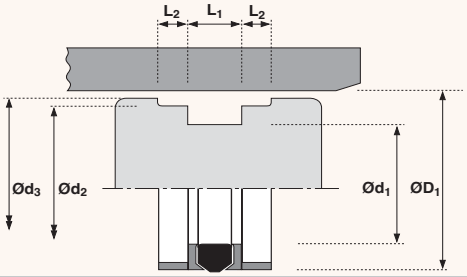

$ØD_1$	TOL H11	$Ød_1$	TOL h10	$Ød_2$	TOL f9	$Ød_3$	TOL h11	L_1 + 0.4 + 0.15	L_2 + 0.1 - 0	PART No.
115	+0.22 +0.00	90	+0.00 -0.14	108.1	-0.036 -0.123	113.0	+0.00 -0.22	22.0	6.35	0084222
120	+0.22 +0.00	95	+0.00 -0.14	113.1	-0.036 -0.123	118.0	+0.00 -0.22	22.0	6.35	0090012
125	+0.25 +0.00	100	+0.00 -0.14	118.1	-0.036 -0.123	123.0	+0.00 -0.25	25.0	6.35	0087522
130	+0.25 +0.00	105	+0.00 -0.14	122.6	-0.043 -0.143	128.0	+0.00 -0.25	25.0	9.52	0089622
135	+0.25 +0.00	110	+0.00 -0.14	127.6	-0.043 -0.143	133.0	+0.00 -0.25	25.0	9.52	0091222
135	+0.25 +0.00	110	+0.00 -0.14	128.0	-0.043 -0.143	133.0	+0.00 -0.25	25.0	12.70	0091212
140	+0.25 +0.00	115	+0.00 -0.14	132.6	-0.043 -0.143	138.0	+0.00 -0.25	25.0	6.35	0091032
140	+0.25 +0.00	115	+0.00 -0.14	132.6	-0.043 -0.143	138.0	+0.00 -0.25	25.0	9.52	0091022
145	+0.25 +0.00	120	+0.00 -0.14	137.6	-0.043 -0.143	143.0	+0.00 -0.25	25.0	9.52	0091422
150	+0.25 +0.00	125	+0.00 -0.16	142.6	-0.043 -0.143	148.0	+0.00 -0.25	25.0	9.52	0091522
150	+0.25 +0.00	125	+0.00 -0.16	143.0	-0.043 -0.143	148.0	+0.00 -0.25	25.0	12.70	0091512
155	+0.25 +0.00	130	+0.00 -0.16	147.6	-0.043 -0.143	153.0	+0.00 -0.25	25.0	9.52	0091622
160	+0.25 +0.00	135	+0.00 -0.16	152.6	-0.043 -0.143	158.0	+0.00 -0.25	25.0	9.52	0089922
165	+0.25 +0.00	140	+0.00 -0.16	158.0	-0.043 -0.143	163.0	+0.00 -0.25	25.0	12.70	1257612
170	+0.25 +0.00	145	+0.00 -0.16	161.7	-0.043 -0.143	168.0	+0.00 -0.25	25.0	12.70	0088012
175	+0.25 +0.00	150	+0.00 -0.16	166.7	-0.043 -0.143	173.0	+0.00 -0.25	25.0	12.70	1260712
180	+0.25 +0.00	155	+0.00 -0.16	171.7	-0.043 -0.143	178.0	+0.00 -0.25	25.0	12.70	0091712
190	+0.29 +0.00	165	+0.00 -0.16	181.7	-0.050 -0.165	188.0	+0.00 -0.29	25.0	12.70	1270012
195	+0.29 +0.00	170	+0.00 -0.16	186.7	-0.050 -0.165	193.0	+0.00 -0.29	25.0	12.70	1265412
200	+0.29 +0.00	170	+0.00 -0.16	192.0	-0.050 -0.165	197.0	+0.00 -0.29	30.0	15.00	1270112
200	+0.29 +0.00	175	+0.00 -0.16	191.6	-0.050 -0.165	198.0	+0.00 -0.29	25.0	12.70	0089712
220	+0.29 +0.00	190	+0.00 -0.19	212.0	-0.050 -0.165	217.0	+0.00 -0.29	30.0	15.00	1714810
250	+0.29 +0.00	220	+0.00 -0.19	242.0	-0.050 -0.165	247.0	+0.00 -0.29	30.0	15.00	1264312
280	+0.29 +0.00	250	+0.00 -0.19	272.0	-0.056 -0.186	277.0	+0.00 -0.32	30.0	15.00	1261712

Hallite
Fenner Advanced Sealing Technologies

OTP®

54

Technical details

	Metric	Inch
Operating conditions		
Maximum Speed	4.0 m/sec	12.0 ft/sec
Temperature Range	-30°C +100°C	-22°F +212°F
Maximum Pressure	350 bar	5000 p.s.i.

Maximum extrusion gap

Figures show the maximum permissible gap all on one side using minimum rod Ø and maximum clearance Ø. Refer to Housing Design section.

Pressure bar	100	160	250	350
Maximum Gap mm	0.60	0.50	0.45	0.35
Pressure p.s.i.	1500	2400	3750	5250
Maximum Gap in	0.024	0.020	0.018	0.014

Surface roughness	µmRa	µmRt	µinCLA	µinRMS
Dynamic Sealing Face ØD_1	0.1 <> 0.4	4 max	4 <> 16	5 <> 18
Static Sealing Face Ød_1	1.6 max	10 max	63 max	70 max
Static Housing Faces L_1	3.2 max	16 max	125 max	140 max

Chamfers & Radii					
Groove Section ≤ S mm	3.75	5.50	7.75	10.50	12.25
Min Chamfer C mm	2.00	2.50	5.00	7.50	10.00
Max Fillet Rad r_1 mm	0.40	0.80	1.20	1.60	2.00
Groove Section ≤ S in	0.147	0.216	0.305	0.413	0.483
Min Chamfer C in	0.093	0.125	0.156	0.187	0.305
Max Fillet Rad r_1 in	0.016	0.016	0.032	0.032	0.032

Tolerances	ØD_1	Ød_1	L_1
mm	H9	h9	+0.2 -0
in	H9	h9	+0.008 -0

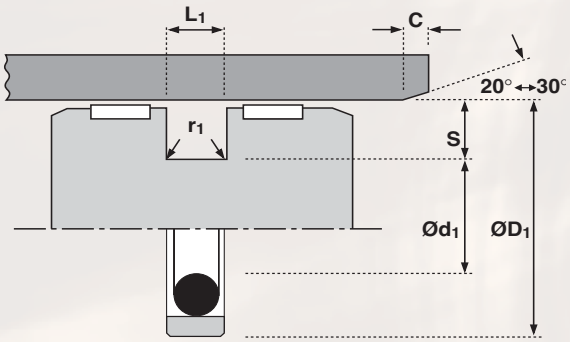

Features

- **Low stick/slip**
- **Low breakout & running friction**
- **High maximum speed**
- **Compact piston design**
- **The seal ring component can be machined to any size**

Materials

Face material – O-Ring	last two digits of part number
Standard material	
15% Glass/PTFE – NBR	_ _ _ _ _ **10**
Material options:	
15% Glass/PTFE – FKM	_ _ _ _ _ **11**
Bronze/PTFE – NBR	_ _ _ _ _ **20**
Bronze/PTFE – FKM	_ _ _ _ _ **21**

Technical details shown are for 15% Glass/PTFE and NBR energiser. Technical details for material options should be requested from Hallite Seals.

Design

The Hallite 54 double acting piston seal provides the designer with a compact, low friction seal for light to medium duty hydraulic cylinders.

It comprises a PTFE ring, strengthened with additives to resist creep, which is pre-loaded by an O ring to be effective for the operating pressure range recommended. As the pressure rises the O ring deforms and compresses the PTFE ring against the tube wall increasing the sealing force and the effectiveness of the seal. As only the PTFE ring is in contact with the sliding surface, friction is very low and stick-slip movement is eliminated.

The housing width allows the designer to use a narrow width piston, but it is recommended an adequate bearing is mounted either side of the seal as shown.*

A number of material options can be provided to extend operating conditions. Please ensure that the correct part number is specified for the material option as indicated.

The Hallite 54 seal is not recommended for applications where it is necessary for the pressurised cylinder to maintain the load in a set position.

*See Hallite 87 and 506 wear ring data sheets.

NB: Part numbers suffixed by "‡" indicate housing sizes to meet ISO 7425-1.

54

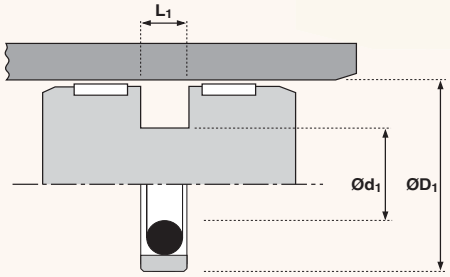

ØD1	TOL H9	Ød1	TOL h9	L1 + 0.2 - 0	PART No.
12	+0.04 +0.00	7.1	+0.000 -0.036	2.20	66239_ _
15	+0.04 +0.00	7.5	+0.000 -0.036	3.20	86163_ _
16	+0.04 +0.00	8.5	+0.000 -0.036	3.20	66240_ _ ‡
20	+0.05 +0.00	12.5	+0.000 -0.043	3.20	66241_ _ ‡
24	+0.05 +0.00	16.5	+0.000 -0.043	3.20	66154_ _
25	+0.05 +0.00	17.5	+0.000 -0.043	3.20	66242_ _ ‡
30	+0.05 +0.00	22.5	+0.000 -0.052	3.20	65968_ _
32	+0.06 +0.00	24.5	+0.000 -0.052	3.20	65969_ _ ‡
35	+0.06 +0.00	27.5	+0.000 -0.052	3.20	65970_ _
38	+0.06 +0.00	30.5	+0.000 -0.062	3.20	66475_ _
40	+0.06 +0.00	29.0	+0.000 -0.062	4.20	65971_ _ ‡
42	+0.06 +0.00	31.0	+0.000 -0.062	4.20	65972_ _
45	+0.06 +0.00	34.0	+0.000 -0.062	4.20	65973_ _
50	+0.06 +0.00	39.0	+0.000 -0.062	4.20	65974_ _ ‡
55	+0.07 +0.00	44.0	+0.000 -0.062	4.20	65975_ _
60	+0.07 +0.00	49.0	+0.000 -0.062	4.20	65976_ _
63	+0.07 +0.00	52.0	+0.000 -0.074	4.20	66243_ _ ‡
65	+0.07 +0.00	54.0	+0.000 -0.074	4.20	86118_ _
70	+0.07 +0.00	59.0	+0.000 -0.074	4.20	65977_ _
75	+0.07 +0.00	64.0	+0.000 -0.074	4.20	66244_ _
80	+0.07 +0.00	64.5	+0.000 -0.074	6.30	65978_ _ ‡
90	+0.09 +0.00	74.5	+0.000 -0.074	6.30	65979_ _
95	+0.09 +0.00	79.5	+0.000 -0.074	6.30	86084_ _

ØD1	TOL H9	Ød1	TOL h9	L1 + 0.2 - 0	PART No.
100	+0.09 +0.00	84.5	+0.000 -0.087	6.30	65980_ _ ‡
110	+0.09 +0.00	94.5	+0.000 -0.087	6.30	65981_ _
115	+0.09 +0.00	99.5	+0.000 -0.087	6.30	65982_ _
120	+0.09 +0.00	104.5	+0.000 -0.087	6.30	66361_ _
125	+0.10 +0.00	109.5	+0.000 -0.087	6.30	65983_ _ ‡
130	+0.10 +0.00	114.5	+0.000 -0.087	6.30	66476_ _
135	+0.10 +0.00	114.0	+0.000 -0.087	8.10	66477_ _
140	+0.10 +0.00	119.0	-0.000 -0.087	8.10	65984_ _
145	+0.10 +0.00	124.0	+0.000 -0.100	8.10	86080_ _
150	+0.10 +0.00	129.0	+0.000 -0.100	8.10	65985_ _
155	+0.10 +0.00	134.0	+0.000 -0.100	8.10	86177_ _
160	+0.10 +0.00	139.0	+0.000 -0.100	8.10	65986_ _ ‡
165	+0.10 +0.00	144.0	+0.000 -0.100	8.10	66491_ _
170	+0.10 +0.00	149.0	+0.000 -0.100	8.10	65987_ _
180	+0.10 +0.00	159.0	+0.000 -0.100	8.10	65988_ _
185	+0.12 +0.00	164.0	+0.000 -0.100	8.10	66478_ _
190	+0.12 +0.00	169.0	+0.000 -0.100	8.10	65989_ _
200	+0.12 +0.00	179.0	+0.000 -0.100	8.10	65990_ _ ‡
210	+0.12 +0.00	189.0	+0.000 -0.115	8.10	86146_ _
220	+0.12 +0.00	199.0	+0.000 -0.115	8.10	66245_ _
225	+0.12 +0.00	204.0	+0.000 -0.115	8.10	66246_ _
230	+0.12 +0.00	209.0	+0.000 -0.115	8.10	66247_ _
240	+0.12 +0.00	219.0	+0.000 -0.115	8.10	86154_ _

54

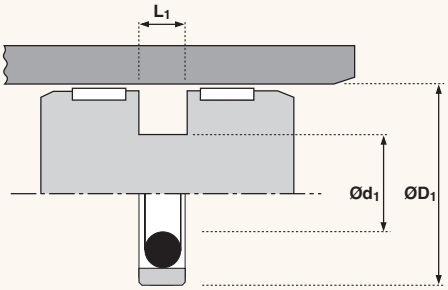

ØD1	TOL H9	Ød1	TOL h9	L1 + 0.2 - 0	PART No.
250	+0.12 +0.00	229.0	+0.000 -0.115	8.10	66401_ _ ‡
260	+0.13 +0.00	239.0	+0.000 -0.115	8.10	66479_ _
280	+0.13 +0.00	259.0	+0.000 -0.130	8.10	66402_ _
300	+0.13 +0.00	279.0	+0.000 -0.130	8.10	66403_ _
310	+0.13 +0.00	289.0	+0.000 -0.130	8.10	66480_ _
320	+0.14 +0.00	299.0	+0.000 -0.130	8.10	86086_ _ ‡
330	+0.14 +0.00	305.5	+0.000 -0.130	8.10	86081_ _

ØD1	TOL H9	Ød1	TOL h9	L1 + 0.2 - 0	PART No.
340	+0.14 +0.00	315.5	+0.000 -0.140	8.10	66481_ _
350	+0.14 +0.00	325.5	+0.000 -0.140	8.10	86155_ _
360	+0.14 +0.00	335.5	+0.000 -0.140	8.10	86218_ _
370	+0.14 +0.00	345.5	+0.000 -0.140	8.10	86219_ _
380	+0.14 +0.00	355.5	+0.000 -0.140	8.10	86220_ _
390	+0.14 +0.00	365.5	+0.000 -0.140	8.10	86221_ _
400	+0.14 +0.00	375.5	+0.000 -0.140	8.10	66482_ _ ‡

Technical details

	Metric	Inch
Operating conditions		
Maximum Speed	0.5 m/sec	1.5 ft/sec
Temperature Range	-30°C +100°C	-22°F +212°F
Maximum Pressure	500 bar	7500 p.s.i.

Maximum extrusion gap

Figures show the maximum permissible gap all on one side using minimum rod Ø and maximum clearance Ø. Refer to Housing Design section.

Pressure bar	160	250	400	500
Maximum Gap mm	0.35	0.3	0.2	0.1
Pressure p.s.i.	2400	3750	6000	7500
Maximum Gap in	0.016	0.012	0.008	0.004

Surface roughness	µmRa	µmRt	µinCLA	µinRMS
Dynamic Sealing Face $ØD_1$	0.1 <> 0.4	4 max	4 <> 16	5 <> 18
Static Sealing Face $Ød_1$	1.6 max	10 max	63 max	70 max
Static Housing Faces L_1	3.2 max	16 max	125 max	140 max

Chamfers & Radii					
Groove Section ≤ S mm	5.0	7.5	8.0	10.0	12.5
Min Chamfer C mm	2.4	4.0	5.0	5.0	6.5
Max Fillet Rad r_1 mm	0.4	0.8	0.8	1.2	1.6
Groove Section ≤ S in	0.250	0.312	0.375	0.500	0.625
Min Chamfer C in	0.125	0.156	0.187	0.217	0.250
Max Fillet Rad r_1 in	0.016	0.016	0.032	0.032	0.047

Tolerances	$ØD_1$	$Ød_1$	L_1
mm	H11	js11	+0.25 +0
in	H11	js11	+0.030 +0.020

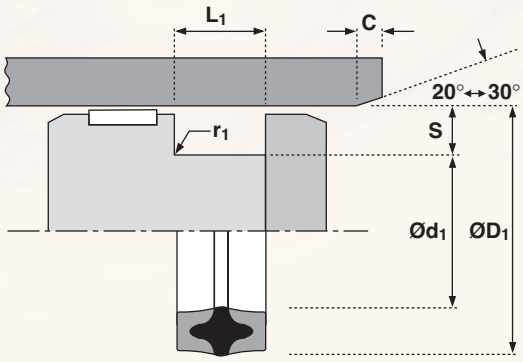

Features

- **Well proven design**
- **Tolerant to contamination**
- **Wide range of non standard sizes**

Design

A medium to heavy duty double acting seal, the Hallite 56 has shown itself over many years to be an effective and robust piston seal in a wide variety of applications. Designed for split pistons it offers the benefits in terms of sealing efficiency and low friction gained from rubber/fabric and a specific proportion of rubber in contact with the cylinder surface.

The centre of the seal is rubber which is bonded to two 'U' section bases of rubberised fabric, and is compressed by the housing to obtain an effective low pressure seal. When the pressure increases the rubber energises the 'U' section and deforms it to the housing, increasing the sealing area and improving the seal.

Rubberised fabric is used to protect the rubber because it has strength and durability which combines with its ability to retain lubricant, to help keep friction low and reduce wear.

The proportions of the range have been determined to give a satisfactory performance when used with the recommended operating conditions.

Many other sizes are available outside this range.

56

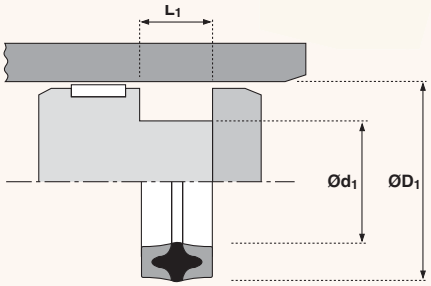

ØD1	TOL H11	Ød1	TOL js11	L1 + 0.25 - 0	PART No.
30	+0.13 +0.00	20	+0.07 -0.07	12.5	0200540
40	+0.16 +0.00	25	+0.07 -0.07	19.0	0472840
50	+0.16 +0.00	35	+0.08 -0.08	19.0	0474640
55	+0.19 +0.00	40	+0.08 -0.08	19.0	0475040
60	+0.19 +0.00	40	+0.08 -0.08	25.0	0282040
60	+0.19 +0.00	45	+0.08 -0.08	19.0	0979440
63	+0.19 +0.00	43	+0.08 -0.08	25.0	0646740
65	+0.19 +0.00	50	+0.08 -0.08	19.0	0383840
70	+0.19 +0.00	50	+0.08 -0.08	25.0	0294640
75	+0.19 +0.00	55	+0.10 -0.10	25.0	0818640
80	+0.19 +0.00	60	+0.10 -0.10	25.0	0294940
85	+0.22 +0.00	65	+0.10 -0.10	25.0	0388640
90	+0.22 +0.00	70	+0.10 -0.10	25.0	0296040
100	+0.22 +0.00	80	+0.10 -0.10	25.0	0295140
110	+0.22 +0.00	90	+0.11 -0.11	25.0	0712440
120	+0.22 +0.00	100	+0.11 -0.11	25.0	0296140
125	+0.25 +0.00	100	+0.11 -0.11	19.0	1007440
125	+0.25 +0.00	100	+0.11 -0.11	32.0	0418640
140	+0.25 +0.00	120	+0.11 -0.11	25.0	0250540
150	+0.25 +0.00	120	+0.11 -0.11	38.0	1289540

ØD1	TOL H11	Ød1	TOL js11	L1 + 0.25 - 0	PART No.
160	+0.25 +0.00	135	+0.13 -0.13	32.0	0080440
170	+0.25 +0.00	150	+0.13 -0.13	25.0	0303340
180	+0.25 +0.00	160	+0.13 -0.13	25.0	1283140
190	+0.29 +0.00	160	+0.13 -0.13	38.0	0838440
200	+0.29 +0.00	170	+0.13 -0.13	38.0	0087140
220	+0.29 +0.00	190	+0.15 -0.15	38.0	0087340
230	+0.29 +0.00	200	+0.15 -0.15	38.0	2010040
240	+0.29 +0.00	210	+0.15 -0.15	38.0	0094340
250	+0.29 +0.00	220	+0.15 -0.15	38.0	1056340
260	+0.32 +0.00	230	+0.15 -0.15	38.0	0094540
300	+0.32 +0.00	270	+0.16 -0.16	38.0	0094840
330	+0.36 +0.00	300	+0.16 -0.16	38.0	0095040
360	+0.36 +0.00	320	+0.18 -0.18	45.0	1054040
400	+0.36 +0.00	360	+0.18 -0.18	45.0	1054340
420	+0.40 +0.00	380	+0.20 -0.20	45.0	0095140
460	+0.40 +0.00	420	+0.20 -0.20	45.0	0095340
480	+0.40 +0.00	440	+0.20 -0.20	45.0	0095440
500	+0.40 +0.00	460	+0.20 -0.20	45.0	0134740
540	+0.44 +0.00	500	+0.20 -0.20	45.0	2018240
580	+0.44 +0.00	540	+0.22 -0.22	50.0	2020940

Hallite
Fenner Advanced Sealing Technologies

OTP®

58

Technical details

	Metric						Inch	
Operating conditions								
Maximum Speed	0.5 m/sec						1.5 ft/sec	
Temperature Range	-30°C +100°C						-22°F +212°F	
Maximum Pressure	700 bar						10,000 p.s.i.	
Surface roughness	µmRa		µmRt				µinCLA	µinRMS
Dynamic Sealing Face $ØD_1$	0.1 <> 0.4		4 max				4 <> 16	5 <> 18
Static Sealing Face $Ød_1$ $Ød_2$	1.6 max		10 max				63 max	70 max
Static Housing Faces $Ød_3$ L_1 L_2	3.2 max		16 max				125 max	140 max
Chamfers & Radii								
Groove Section ≤ S mm	5.0	7.5	10.0	12.5	15.0			
Min Chamfer C mm	2.5	4.0	5.0	6.5	7.5			
Min Chamfer C_1 mm	1.0	1.0	1.0	1.5	1.5			
Max Fillet Rad r_1 mm	0.2	0.2	0.2	0.4	0.4			
Max Fillet Rad r_2 mm	0.2	0.2	0.2	0.4	0.4			
Groove Section ≤ S in	0.187	0.250	0.312	0.375	0.500	0.625		
Min Chamfer C in	0.093	0.125	0.156	0.187	0.217	0.250		
Min Chamfer C_1 in	0.032	0.032	0.032	0.062	0.062	0.062		
Max Fillet Rad r_1 in	0.008	0.008	0.008	0.008	0.016	0.016		
Max Fillet Rad r_2 in	0.008	0.008	0.008	0.008	0.016	0.016		

Tolerances	$ØD_1$	$Ød_1$	$Ød_2$	$Ød_3$	L_1	L_2
mm	H11	js11	h9	js11	+0.25 -0	0 -0.15
in	H11	js11	h9	js11	+0.035 +0.025	0 -0.005

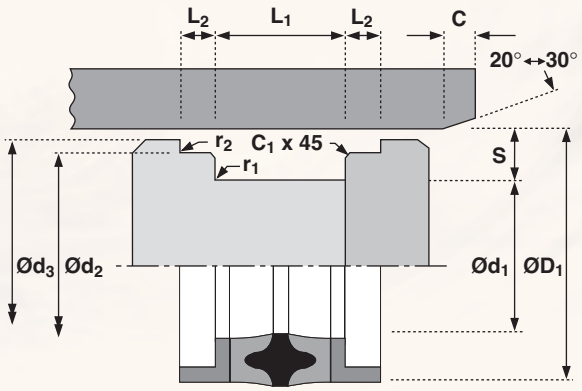

Design

The Hallite 58 double acting piston seal combines the Hallite 56 seal with bearing rings to give a very robust heavy duty seal assembly for split pistons. It enables the designer to use larger clearances and, with the integral bearing rings, to restrict the piston length.

The assembly comprises a seal and two L shaped bearings. The centre of the seal is rubber which is bonded to two 'U' section bases of rubberised fabric, and is compressed by the housing to obtain an effective low pressure seal. When the pressure increases the rubber energises the 'U' section and deforms it to the housing, increasing the sealing area and improving the seal.

Rubberised fabric is used to protect the rubber, because it has strength and durability which combines with its ability to retain lubricant to help keep friction low and reduce wear.

Supporting the seal at either end is a polyacetal bearing proportioned to react to the pressure on the seal to prevent extrusion damage, and support the piston and its side load.

Features

- **Well proven design**
- **Tolerant to contamination**
- **High pressure capability**

58

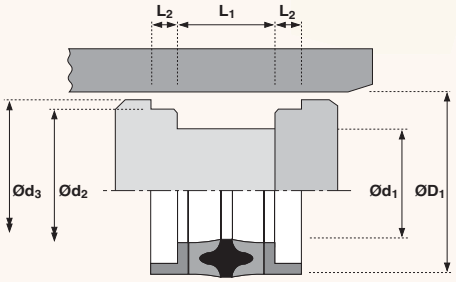

$ØD_1$	TOL H11	$Ød_1$	TOL js11	$Ød_2$	TOL h9	$Ød_3$	TOL js11	L_1 + 0.25 - 0	L_2 0 - 0.15	PART No.
40	+0.16 +0.00	25	+0.07 -0.07	34.85	+0.000 -0.062	39.0	+0.08 -0.08	24.0	6.00	0472850
45	+0.16 +0.00	26	+0.07 -0.07	38.85	+0.000 -0.062	44.0	+0.08 -0.08	31.0	6.50	0474050
50	+0.16 +0.00	34	+0.08 -0.08	45.54	+0.000 -0.062	48.5	+0.08 -0.08	18.0	6.45	0814850
50	+0.16 +0.00	35	+0.08 -0.08	44.85	+0.000 -0.062	48.5	+0.08 -0.08	24.0	6.00	0474650
55	+0.19 +0.00	40	+0.08 -0.08	49.85	+0.000 -0.062	53.5	+0.10 -0.10	24.0	6.00	0475050
60	+0.19 +0.00	40	+0.08 -0.08	53.85	+0.000 -0.074	58.5	+0.10 -0.10	31.0	7.00	0282050
63	+0.19 +0.00	43	+0.08 -0.08	56.85	+0.000 -0.074	61.5	+0.10 -0.10	31.0	7.00	0646750
63	+0.19 +0.00	48	+0.08 -0.08	57.85	+0.000 -0.074	61.5	+0.10 -0.10	24.0	6.00	0205250
65	+0.19 +0.00	50	+0.08 -0.08	59.85	+0.000 -0.074	63.5	+0.10 -0.10	24.0	6.00	0383850
70	+0.19 +0.00	50	+0.08 -0.08	63.85	+0.000 -0.074	68.0	+0.10 -0.10	31.0	7.00	0294650
75	+0.19 +0.00	55	+0.10 -0.10	68.85	+0.000 -0.074	73.0	+0.10 -0.10	31.0	7.00	0818650
80	+0.19 +0.00	60	+0.10 -0.10	73.85	+0.000 -0.074	78.0	+0.10 -0.10	31.0	7.00	0294950
85	+0.22 +0.00	65	+0.10 -0.10	78.85	+0.000 -0.074	83.0	+0.11 -0.11	31.0	7.00	0388650
85	+0.22 +0.00	65	+0.10 -0.10	79.16	+0.000 -0.074	83.0	+0.11 -0.11	22.0	6.45	0314550
90	+0.22 +0.00	70	+0.10 -0.10	83.85	+0.000 -0.087	88.0	+0.11 -0.11	31.0	7.00	0296050
95	+0.22 +0.00	75	+0.10 -0.10	88.85	+0.000 -0.087	93.0	+0.11 -0.11	31.0	7.00	0412750
100	+0.22 +0.00	75	+0.10 -0.10	93.24	+0.000 -0.087	98.0	+0.11 -0.11	22.0	6.45	0034950
100	+0.22 +0.00	75	+0.10 -0.10	93.85	+0.000 -0.087	98.0	+0.11 -0.11	26.0	9.50	0891650
100	+0.22 +0.00	80	+0.10 -0.10	93.85	+0.000 -0.087	98.0	+0.11 -0.11	31.0	7.00	0295150
110	+0.22 +0.00	85	+0.11 -0.11	103.50	+0.000 -0.087	108.0	+0.11 -0.11	22.0	6.45	1188250
110	+0.22 +0.00	90	+0.11 -0.11	103.85	+0.000 -0.087	108.0	+0.11 -0.11	31.0	7.00	0712450
115	+0.22 +0.00	95	+0.11 -0.11	108.85	+0.000 -0.087	113.0	+0.11 -0.11	31.0	7.00	0796450
120	+0.22 +0.00	100	+0.11 -0.11	113.85	+0.000 -0.087	118.0	+0.11 -0.11	31.0	7.00	0296150

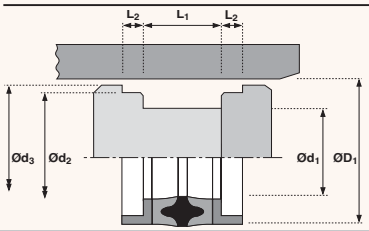

58

$ØD_1$	TOL H11	$Ød_1$	TOL js11	$Ød_2$	TOL h9	$Ød_3$	TOL js11	L_1 + 0.25 - 0	L_2 0 - 0.15	PART No.
125	+0.25 +0.00	100	+0.11 -0.11	118.50	+0.000 -0.087	123.0	+0.13 -0.13	25.0	6.45	1007450
125	+0.25 +0.00	100	+0.11 -0.11	118.85	+0.000 -0.087	123.0	+0.13 -0.13	38.0	9.50	0418650
130	+0.25 +0.00	104	+0.11 -0.11	123.85	+0.000 -0.100	128.0	+0.13 -0.13	38.0	9.50	0244350
130	+0.25 +0.00	105	+0.11 -0.11	123.50	+0.000 -0.100	128.0	+0.13 -0.13	25.0	6.45	0044850
135	+0.25 +0.00	110	+0.11 -0.11	128.35	+0.000 -0.100	133.0	+0.13 -0.13	38.0	9.50	0304350
140	+0.25 +0.00	115	+0.11 -0.11	133.50	+0.000 -0.100	138.0	+0.13 -0.13	25.0	6.45	1008450
140	+0.25 +0.00	120	+0.11 -0.11	133.85	+0.000 -0.100	138.0	+0.13 -0.13	31.0	7.00	0250550
145	+0.25 +0.00	125	+0.11 -0.11	138.85	+0.000 -0.100	143.0	+0.13 -0.13	31.0	7.00	0640150
150	+0.25 +0.00	120	+0.11 -0.11	143.85	+0.000 -0.100	148.0	+0.13 -0.13	44.0	9.50	1289550
150	+0.25 +0.00	125	+0.11 -0.11	143.50	+0.000 -0.100	148.0	+0.13 -0.13	25.0	6.45	1008050
160	+0.25 +0.00	130	+0.13 -0.13	153.50	+0.000 -0.100	158.0	+0.13 -0.13	25.0	6.45	1008250
160	+0.25 +0.00	135	+0.13 -0.13	153.85	+0.000 -0.100	158.0	+0.13 -0.13	38.0	9.50	0080450
160	+0.25 +0.00	140	+0.13 -0.13	153.85	+0.000 -0.100	158.0	+0.13 -0.13	31.0	7.00	0304650
170	+0.25 +0.00	140	+0.13 -0.13	162.54	+0.000 -0.100	168.0	+0.13 -0.13	25.0	6.45	1222250
170	+0.25 +0.00	150	+0.13 -0.13	163.85	+0.000 -0.100	168.0	+0.13 -0.13	31.0	7.00	0303350
180	+0.25 +0.00	150	+0.13 -0.13	173.00	+0.000 -0.100	178.0	+0.13 -0.13	35.0	6.45	0679850
180	+0.25 +0.00	160	+0.13 -0.13	173.85	+0.000 -0.100	178.0	+0.13 -0.13	31.0	7.00	1283150
190	+0.29 +0.00	160	+0.13 -0.13	183.85	+0.000 -0.115	188.0	+0.15 -0.15	44.0	9.50	0838450
200	+0.29 +0.00	170	+0.13 -0.13	193.85	+0.000 -0.115	198.0	+0.15 -0.15	44.0	12.00	0087150
200	+0.29 +0.00	175	+0.13 -0.13	193.85	+0.000 -0.115	198.0	+0.15 -0.15	38.0	9.5	0838850
210	+0.29 +0.00	180	+0.13 -0.13	203.13	+0.000 -0.115	208.0	+0.15 -0.15	31.7	6.45	1198450
220	+0.29 +0.00	200	+0.15 -0.15	213.85	+0.000 -0.115	218.0	+0.15 -0.15	31.0	7.0	1056450
250	+0.29 +0.00	220	+0.15 -0.15	243.85	+0.000 -0.115	248.0	+0.15 -0.15	44.0	12.0	1056350
280	+0.32 +0.00	250	+0.15 -0.15	273.85	+0.000 -0.130	278.0	+0.16 -0.16	44.0	12.0	1055550

Technical details

	Metric			Inch	
Operating conditions					
Maximum Speed	0.5 m/sec			1.5 ft/sec	
Temperature Range	-30°C +100°C			-22°F +212°F	
Maximum Pressure	400 bar			6000 p.s.i.	
Surface roughness	µmRa		µmRt	µinCLA	µinRMS
Dynamic Sealing Face $ØD_1$	0.1 <> 0.4		4 max	4 <> 16	5 <> 18
Static Sealing Face $Ød_1$ $Ød_2$	1.6 max		10 max	63 max	70 max
Static Housing Faces $Ød_3$ L_1 L_2	3.2 max		16 max	125 max	140 max

Chamfers & Radii						
Groove Section ≤ S mm	5.0	7.0	8.0	9.0	11.0	12.5
Min Chamfer C mm	2.5	4.0	5.0	5.0	6.5	6.5
Max Chamfer C_1 mm	0.4	0.4	0.4	0.8	0.8	0.8
Max Fillet Rad r_1 mm	0.4	0.4	0.4	0.4	0.4	0.4
Max Fillet Rad r_2 mm	0.2	0.2	0.2	0.2	0.4	0.4
Tolerances	$ØD_1$	$Ød_1$	$Ød_2$	$Ød_3$	L_1	L_2
mm	H10	h9	h9	h11	+0.2 -0	+0.1 -0

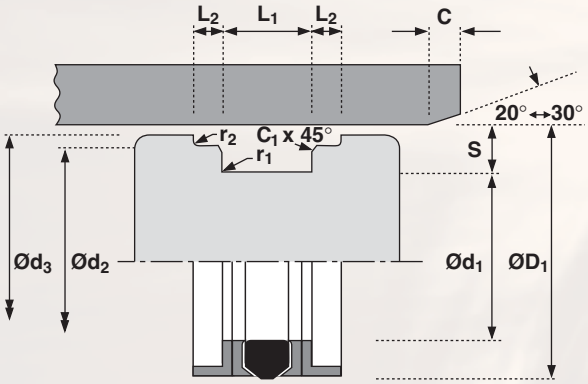

Design

A robust seal assembly designed specifically for one piece pistons, the Hallite 64 double acting seal uses a rubber sealing element which has proved itself in service to be extremely wear resistant and capable of working most effectively in a wide variety of medium to heavy duty applications.

The assembly comprises a rubber seal, two split support rings and two split bearings, one of each located either side of the seal. The nitrile rubber seal is designed to have its section compressed by the housing, to ensure a low pressure seal, and when pressurised be protected from extrusion damage by the extending lips of the support ring. The support ring is manufactured from a tough but flexible polymer and scarf cut for assembly.

L section bearings provide the support and guidance for the piston and the other parts of the seal.

For seals up to 90mm diameter Ød3 is not required. Above 90mm diameter the seals benefit from the additional support of the L-section bearings.

All seals are also suitable for two piece housings.

Note: Other sizes of this design of seal are shown under Hallite 50, 53 and 68. Also see Hallite 753 for interchangeable sizes.

Features

- **Compact seal design**
- **Easy assembly**
- **Positive no drift seal**

64

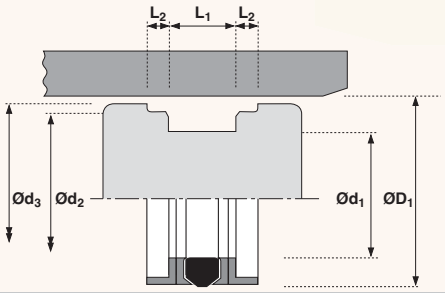

$ØD_1$	TOL H10	$Ød_1$	TOL h9	$Ød_2$	TOL h9	$Ød_3$	TOL h11	L_1 + 0.2 - 0	L_2 + 0.1 - 0	PART No.
32	+0.10 +0.00	22	+0.00 -0.05	28.0	+0.000 -0.052	31.0	+0.00 -0.16	15.5	2.60	6600100
40	+0.10 +0.00	26	+0.00 -0.05	36.0	+0.000 -0.062	39.0	+0.00 -0.16	15.5	2.60	6600200
50	+0.10 +0.00	34	+0.00 -0.06	46.0	+0.000 -0.062	49.0	+0.00 -0.16	20.5	3.10	6600300
55	+0.12 +0.00	39	+0.00 -0.06	51.0	+0.000 -0.074	54.0	+0.00 -0.19	20.5	3.10	6600400
60	+0.12 +0.00	44	+0.00 -0.06	56.0	+0.000 -0.074	59.0	+0.00 -0.19	20.5	3.10	6600500
63	+0.12 +0.00	47	+0.00 -0.06	59.0	+0.000 -0.074	62.0	+0.00 -0.19	20.5	3.10	6600600
65	+0.12 +0.00	49	+0.00 -0.06	61.0	+0.000 -0.074	64.0	+0.00 -0.19	20.5	3.10	1705210
70	+0.12 +0.00	54	+0.00 -0.07	66.0	+0.000 -0.074	69.0	+0.00 -0.19	20.5	3.10	6600700
80	+0.12 +0.00	62	+0.00 -0.07	76.0	+0.000 -0.074	79.0	+0.00 -0.19	22.5	3.60	1705110
90	+0.14 +0.00	72	+0.00 -0.07	86.0	+0.000 -0.087	89.0	+0.00 -0.22	22.5	3.60	6600800
100	+0.14 +0.00	82	+0.00 -0.09	96.0	+0.000 -0.087	99.0	+0.00 -0.22	22.5	3.60	6600900
110	+0.14 +0.00	92	+0.00 -0.09	106.0	+0.000 -0.087	109.0	+0.00 -0.22	22.5	3.60	6601000
125	+0.16 +0.00	103	+0.00 -0.09	121.0	+0.000 -0.100	124.0	+0.00 -0.25	26.5	5.10	6601100
140	+0.16 +0.00	118	+0.00 -0.09	136.0	+0.000 -0.100	139.0	+0.00 -0.25	26.5	5.10	6601200
160	+0.16 +0.00	138	+0.00 -0.10	156.0	+0.000 -0.100	159.0	+0.00 -0.25	26.5	5.10	6601300
250	+0.19 +0.00	225	+0.00 -0.12	246.0	+0.000 -0.115	249.0	+0.00 -0.29	31.5	6.60	6601400

65

Technical details

	Metric			Inch	
Operating conditions					
Maximum Speed	0.5 m/sec			1.5 ft/sec	
Temperature Range	-30°C +100°C			-22°F +212°F	
Maximum Pressure	160 bar			2500 p.s.i.	
Surface roughness	µmRa	µmRt		µinCLA	µinRMS
Dynamic Sealing Face $ØD_1$	0.1 <> 0.4	4 max		4 <> 16	5 <> 18
Static Sealing Face $Ød_1$ $Ød_2$	1.6 max	10 max		63 max	70 max
Static Housing Faces $Ød_3$ L_1 L_2	3.2 max	16 max		125 max	140 max
Chamfers & Radii					
Groove Section ≤ S mm	3.75	5.00	6.50	8.00	10.00
Min Chamfer C mm	2.00	2.50	4.00	5.00	5.00
Max Fillet Rad r_1 mm	0.40	0.40	0.40	0.80	0.80
Max Fillet Rad r_2 mm	0.20	0.20	0.20	0.40	0.40
Groove Section ≤ S in	0.156	0.187	0.250	0.312	0.375
Min Chamfer C in	0.078	0.093	0.125	0.156	0.187
Max Fillet Rad r_1 in	0.016	0.016	0.016	0.032	0.032
Max Fillet Rad r_2 in	0.008	0.008	0.008	0.016	0.016

Tolerances	$ØD_1$	$Ød_1$	$Ød_2$	$Ød_3$	L_1	L_2
mm	H10	h9	h9	h11	+0.4 +0.13	0 -0.13
in	H10	h9	h9	h11	+0.015 +0.005	0 -0.005

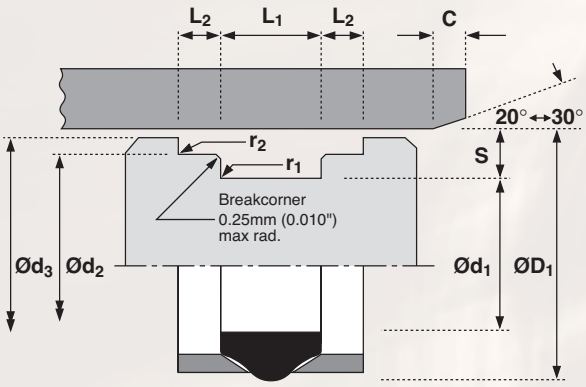

Design

Ideal for light duty one piece piston applications, the Hallite 65 double acting seal is a simple, effective and economical design for pressures up to 160 bar/2500 p.s.i. Its compact dimensions enable the designer to keep the length of the piston to a minimum.

It is an assembly of a continuous rubber seal and two scarf cut bearings.

The nitrile rubber seal is designed to be pre-loaded by the housing to ensure an effective seal at low pressure. The outward thrust of the rubber seal on the bearings as it reacts to increasing pressure prevents any extrusion damage in the sealing area.

The polyacetal bearings are proportioned to support the piston and its side load.

Features

- **Compact design**
- **Easy assembly**
- **Low wear**
- **Long life**

65

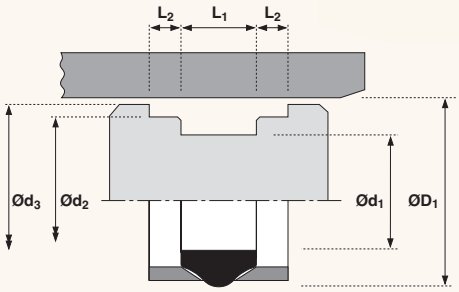

$ØD_1$	TOL H10	$Ød_1$	TOL h9	$Ød_2$	TOL h9	$Ød_3$	TOL h11	L_1 + 0.4 + 0.13	L_2 0 - 0.13	PART No.
25	+0.08 +0.00	17.5	+0.00 -0.04	21.3	+0.000 -0.052	24.0	+0.00 -0.13	8.50	3.25	2218210
32	+0.10 +0.00	22	+0.00 -0.05	27.5	+0.000 -0.052	31.0	+0.00 -0.16	11.00	4.00	2218110
40	+0.10 +0.00	30	+0.00 -0.05	35.5	+0.000 -0.062	39.0	+0.00 -0.16	11.00	4.00	2218010
50	+0.10 +0.00	40	+0.00 -0.06	45.5	+0.000 -0.062	49.0	+0.00 -0.16	11.00	4.00	2217910
63	+0.12 +0.00	53	+0.00 -0.07	58.5	+0.000 -0.074	61.5	+0.00 -0.19	11.00	4.00	2217810
80	+0.12 +0.00	70	+0.00 -0.07	75.5	+0.000 -0.074	78.5	+0.00 -0.19	11.00	4.00	2217610
92	+0.14 +0.00	82	+0.00 -0.09	87.5	+0.000 -0.087	90.5	+0.00 -0.22	11.00	4.00	2240410
100	+0.14 +0.00	87	+0.00 -0.09	93.8	+0.000 -0.087	98.5	+0.00 -0.22	14.00	6.00	0352510
125	+0.16 +0.00	112	+0.00 -0.09	118.8	+0.000 -0.087	123.5	+0.00 -0.25	14.00	6.00	0315810
140	+0.16 +0.00	124	+0.00 -0.10	132.0	+0.000 -0.100	138.5	+0.00 -0.25	17.50	8.75	0317710
160	+0.16 +0.00	140	+0.00 -0.10	151.4	+0.000 -0.100	158.5	+0.00 -0.25	25.00	12.50	0315910
180	+0.16 +0.00	160	+0.00 -0.10	171.4	+0.000 -0.100	178.5	+0.00 -0.25	25.00	12.50	0316010
200	+0.19 +0.00	180	+0.00 -0.10	191.4	+0.000 -0.115	198.5	+0.00 -0.29	25.00	12.50	0316910

Hallite
Fenner Advanced Sealing Technologies

OTP®

Technical details

	Metric			Inch	
Operating conditions					
Maximum Speed	0.5 m/sec			1.5 ft/sec	
Temperature Range	-30°C +100°C			-22°F +212°F	
Maximum Pressure	500 bar			7500 p.s.i.	
Surface roughness	µmRa	µmRt		µinCLA	µinRMS
Dynamic Sealing Face $ØD_1$	0.1 <> 0.4	4 max		4 <> 16	5 <> 18
Static Sealing Face $Ød_1$ $Ød_2$	1.6 max	10 max		63 max	70 max
Static Housing Faces $Ød_3$ L_1 L_2	3.2 max	16 max		125 max	140 max

Chamfers & Radii

Groove Section ≤ S mm	5.0	7.5	10.0	12.5	15.0
Min Chamfer C mm	2.5	4.0	5.0	6.5	7.5
Max Fillet Rad r_1 mm	0.4	0.4	0.4	0.8	0.8
Max Fillet Rad r_2 mm	0.4	0.4	0.4	0.8	0.8

Tolerances	$ØD_1$	$Ød_1$	$Ød_2$	$Ød_3$	L_1	L_2
mm	H10	h9	h9	h11	+0.35 +0.1	+0.1 -0

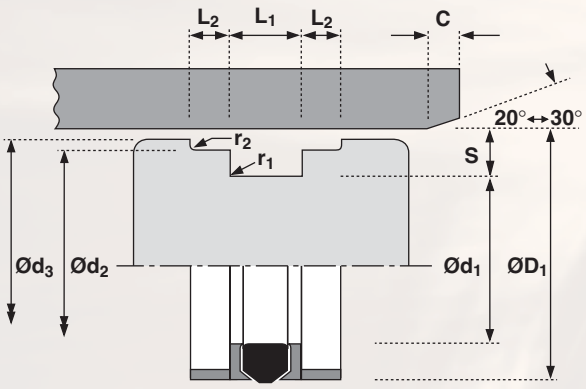

Design

A robust seal assembly designed specifically for one piece pistons, the Hallite 68 double acting seal uses a rubber sealing element which has proved itself in service to be extremely wear resistant and capable of working most effectively in a wide variety of medium to heavy duty applications. The seal is also suitable for two piece pistons.

The assembly comprises a rubber seal, two split support rings and two split bearings, one of each located either side of the seal. The nitrile rubber seal is designed to have its section compressed by the housing, to ensure a low pressure seal, and when pressurised be protected from extrusion damage by the extending lips of the support ring. The support ring is manufactured from a tough but flexible polymer and scarf cut for assembly.

Polyacetal rectangular section bearings provide the support and guidance for the piston and the other parts of the seal.

NB: All sizes are suitable for the larger radial section housings to ISO 6547 and are suffixed ‡

Other sizes of this design of seal are shown under Hallite 50, 53 and 64.

Features

- **ISO 6547 Housing**
- **Compact groove design**
- **Positive no drift seal**

68

68

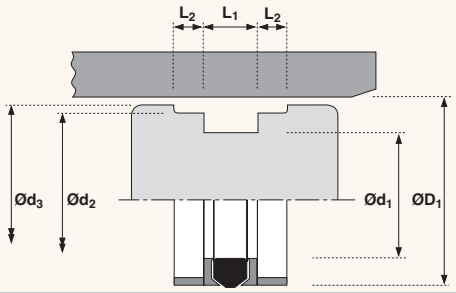

ØD1	TOL H10	Ød1	TOL h9	Ød2	TOL h9	Ød3	TOL h11	L1 + 0.35 + 0.1	L2 + 0.1 - 0	PART No.
25	+0.08 +0.00	15	+0.00 -0.04	22.0	+0.000 -0.052	24.0	+0.00 -0.13	12.50	4.0	6594610‡
32	+0.10 +0.00	22	+0.00 -0.05	29.0	+0.000 -0.052	31.0	+0.00 -0.16	12.50	4.0	2249320‡
40	+0.10 +0.00	30	+0.00 -0.05	37.0	+0.000 -0.062	39.0	+0.00 -0.16	12.50	4.0	2249420‡
50	+0.10 +0.00	35	+0.00 -0.06	46.0	+0.000 -0.062	48.5	+0.00 -0.16	20.00	5.0	0074020‡
63	+0.12 +0.00	48	+0.00 -0.06	59.0	+0.000 -0.074	61.5	+0.00 -0.19	20.00	5.0	6594710‡
80	+0.12 +0.00	60	+0.00 -0.07	75.0	+0.000 -0.074	78.0	+0.00 -0.19	25.00	6.3	0073830‡
100	+0.14 +0.00	80	+0.00 -0.07	95.0	+0.000 -0.087	98.0	+0.00 -0.22	25.00	6.3	0083620‡
125	+0.16 +0.00	100	+0.00 -0.09	119.0	+0.000 -0.087	123.0	+0.00 -0.25	32.00	10.0	0087540‡
160	+0.16 +0.00	135	+0.00 -0.10	154.0	+0.000 -0.100	158.0	+0.00 -0.25	32.00	10.0	0089930‡
200	+0.l9 +0.00	170	+0.00 -0.10	192.0	+0.000 -0.115	197.0	+0.00 -0.29	36.00	12.5	1270120‡
250	+0.19 +0.00	220	+0.00 -0.12	242.0	+0.000 -0.115	247.0	+0.00 -0.29	36.00	12.5	1264320‡

Hallite
Fenner Advanced Sealing Technologies

OTP®

77

Technical details

	Metric				Inch	
Operating conditions						
Maximum Speed	0.5 m/sec				1.5 ft/sec	
Temperature Range	-30°C + 100°C				-22°F + 212°F	
Maximum Pressure	350 bar				6000 p.s.i.	
Surface roughness	µmRa		µmRt		µinCLA	µinRMS
Dynamic Sealing Face $ØD_1$	0.1 <> 0.4		4 max		4 <> 16	5 <> 18
Static Sealing Face $Ød_1$ $Ød_2$	1.6 max		10 max		63 max	70 max
Static Housing Faces $Ød_3$ L_1 L_2	3.2 max		16 max		125 max	140 max
Chamfers & Radii						
Groove Section ≤ S mm	3.75		5.00		6.50	
Min Chamfer C mm	2.00		2.50		4.00	
Max Fillet Rad r_1 mm	0.40		0.40		0.40	
Max Fillet Rad r_2 mm	0.20		0.20		0.20	
Groove Section ≤ S in	0.156		0.187		0.250	
Min Chamfer C in	0.078		0.093		0.125	
Max Fillet Rad r_1 in	0.016		0.016		0.016	
Max Fillet Rad r_2 in	0.008		0.008		0.008	

Tolerances	$ØD_1$	$Ød_1$	$Ød_2$	$Ød_3$	L_1	L_2
mm	H10	h9	h9	h11	+0.4 +0.13	0 -0.13
in	H10	h9	h9	h11	+0.015 +0.005	0 -0.005

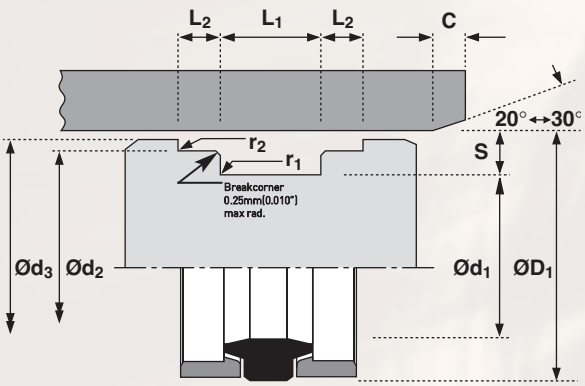

Design

Ideal for light to medium duty one piece piston applications, the Hallite 77 seal is a simple, effective and economical design. Its compact dimensions enable the designer to keep the length of the piston to a minimum.

It is an assembly of a continuous rubber seal and two scarf cut bearings.

The nitrile rubber seal is designed to be pre-loaded by the housing to ensure an effective seal at low pressure. The outward thrust of the rubber seal on the bearings as it reacts to increasing pressure prevents any extrusion damage in the sealing area.

The pair of polyacetal bearings are proportioned to support the piston and its side load.

Features

- **Compact design**
- **Easy assembly**
- **Low wear**
- **Long life**

77

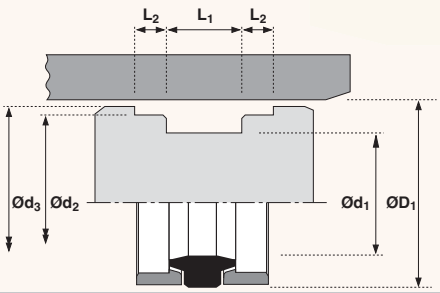

metric

ØD1	TOL H10	Ød1	TOL h9	Ød2	TOL h9	Ød3	TOL h11	L1 + 0.4 + 0.13	L2 0 - 0.13	PART No.
25	+0.08 +0.00	17.5	+0.00 -0.04	21.3	+0.000 -0.052	24.0	+0.00 -0.13	8.50	3.25	6111410
40	+0.10 +0.00	30	+0.00 -0.05	35.5	+0.000 -0.062	39.0	+0.00 -0.16	11.00	4.00	6111210
50	+0.10 +0.00	40	+0.00 -0.06	45.5	+0.000 -0.062	49.0	+0.00 -0.16	11.00	4.00	2326110
60	+0.10 +0.00	48	+0.00 -0.06	55.9	+0.000 -0.062	59.2	+0.00 -0.16	20.50	4.20	2326210
63	+0.12 +0.00	53	+0.00 -0.07	58.5	+0.000 -0.074	61.5	+0.00 -0.19	11.00	4.00	2325810
80	+0.12 +0.00	70	+0.00 -0.07	75.5	+0.000 -0.074	78.5	+0.00 -0.19	11.00	4.00	2325710
100	+0.14 +0.00	87	+0.00 -0.09	93.8	+0.000 -0.087	98.5	+0.00 -0.22	14.00	6.00	2326010
125	+0.16 +0.00	112	+0.00 -0.09	118.8	+0.000 -0.087	123.5	+0.00 -0.25	14.00	6.00	2325910

inch

ØD1	TOL H10	Ød1	TOL h9	Ød2	TOL h9	Ød3	TOL h11	L1 + 0.015 + 0.005	L2 0 - 0.005	PART No.
1.250	+0.004 +0.000	0.937	+0.000 -0.002	1.079	+0.000 -0.002	1.187	+0.000 -0.005	0.343	0.125	6567790
2.375	+0.005 +0.000	2.000	+0.000 -0.003	2.200	+0.000 -0.003	2.312	+0.00 -0.005	0.437	0.150	6918060
2.500	+0.005 +0.000	2.125	+0.000 -0.003	2.325	+0.000 -0.003	2.437	+0.000 -0.005	0.437	0.150	2360210
3.250	+0.005 +0.000	2.875	+0.000 -0.003	3.270	+0.000 -0.004	3.437	+0.000 -0.005	0.437	0.150	2360310

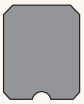

80

Technical details

	Metric		Inch	
Operating conditions				
Maximum Speed	0.1 m/sec		0.3 ft/sec	
Temperature Range	-30°C + 80°C		-22°F +76°F	
Maximum Pressure	350 bar		5000 p.s.i.	
Surface roughness	µmRa	µmRt	µinCLA	µinRMS
Dynamic Sealing Face Ød$_1$	0.1 <> 0.4	4 max	4 <> 16	5 <> 18
Static Sealing Face ØD$_1$	1.6 max	10 max	63 max	70 max
Static Housing Faces L$_1$	3.2 max	16 max	125 max	140 max
Chamfers & Radii				
Groove Section ≤ S mm	5.2			
Min Chamfer C mm	2.4			
Max Fillet Rad r$_1$ mm	0.4			
Tolerances	Ød$_1$ f8	ØD$_1$ H10	ØD$_2$ H8	L$_1$ mm +0.3 -0

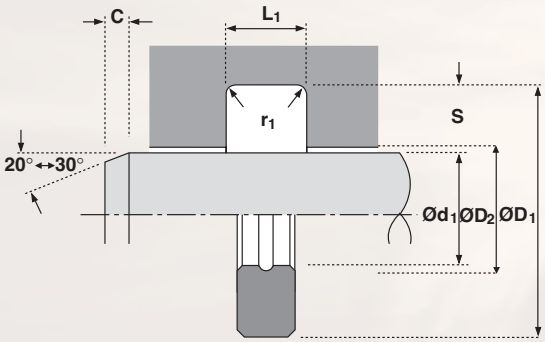

Design

The Hallite 80 rotary pressure seal is a seal designed specifically for use in hydraulic swivel joints.

The Hallite 80 is manufactured in Hallite's high specification polyurethane, Hythane 181, to provide ease of installation and excellent sealing characteristics.

Please call your local Hallite sales office for further details.

metric

Ød1	TOL f8	ØD1	TOL H10	L1 +0.3 -0.0	PART No.
80.00	-0.030 -0.076	90.00	+0.14 -0.00	5.00	4563000
90.00	-0.036 -0.090	100.00	+0.14 -0.00	5.00	4563100
100.00	-0.036 -0.090	110.00	+0.14 -0.00	5.00	4563200
125.00	-0.043 -0.106	135.40	+0.16 -0.00	5.00	4578800

Hallite
Fenner Advanced Sealing Technologies

OTP®

87

Technical details

	Metric		Inch	
Operating Conditions				
Maximum Speed	5.0 m/sec		15.0 ft/sec	
Temperature Range	-50°C +200°C		-58°F +390°F	
Typical Physical Properties				
Specific Gravity		3.1		3.1
Compression Stress at Yield	23°C	20 MN/m2	73°F	2900 p.s.i.
Compression Stress at Yield	80°C	9 MN/m2	176°F	1300 p.s.i.
Coefficient of Thermal Conductivity		2.5 W/mK		1.4Btu/hft°F
Coefficient of Thermal Expansion	Length & Thickness 6.5×10^{-5} per °C			
Coefficient of Dynamic Friction	Dry	Lubricated		
	0.25	0.05		
Bearing Strip Tolerances	L_1	S		
	-0.1 -0.5	+0.03 -0.05		
Surface Roughness	µmRa	µmRt	µinCLA	µinRMS
Dynamic Sealing Face $Ød_1$ $ØD_1$	0.4	4 max	16	18
Static Housing Faces $ØD_2$ L_1 $Ød_2$	3.2 max	16 max	125 max	140 max
Housing Details & Tolerances				
Rod	$Ød_1$	f9		
	$ØD_2=Ød_1+2S$	up to: Ø80 H10 above: Ø80 H9		
	$ØD_3=Ød_1+G$	G min / max		
	L_1	-0 + 0.2		
Piston	$ØD_1$	H11		
	$Ød_2=ØD_1-2S$	f9		
	$Ød_3=ØD_1-G$	G min / max		
	L_1	-0 + 0.2		

G min controls the minimum metal to metal clearance between the gland and rod or bore and piston.

G max controls the maximum extrusion gap seen by a seal associated with the bearing.

Typically, G min should be 0.7mm / 0.028" but can be reduced when required by the extrusion gap for the seal and the build up of tolerances.

The absolute minimum metal to metal clearance recommended is 0.1mm / 0.004"

For applications not using a seal G max – see overleaf.

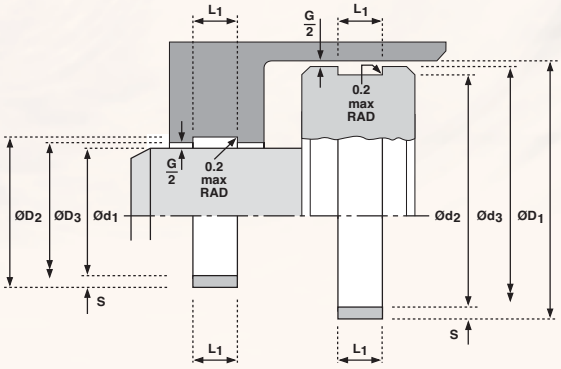

Features

- **Low friction**
- **Infinite length range**
- **Easy installation**
- **Extremely flexible**

Design

Hallite 87 bearing strip has the ability to support side loads and eliminate 'stick slip' between moving parts. The accurately dimensioned rectangular cross section is produced from a special combination of PTFE and Bronze materials. It has excellent heat resistance and strength to resist creep, making it suitable for bearings with reciprocating, oscillating or rotary movement, whether lubricated or not. Our standard range of cross section sizes are proportioned to be wrapped around a wide range of rod or piston diameters. Installation of the bearing is an easy task. Calculate and measure length L2 (see overleaf), cut the strip with a sharp blade and fit to the groove. If required we will be pleased to supply bearings to your sizes. Independent testing has established the typical properties which make the Hallite 87 worthwhile considering for many applications other than hydraulic or pneumatic cylinders. When using the compressive stress at yield in your calculation it is suggested a 4:1 factor of safety is applied.

The material is compatible with hydraulic mineral oil, lubricating oil, water based and synthetic fire resistant fluids and lubricating grease. Although the material is rated at 200°C, the recommended maximum temperature for bearing applications is 60°C.

Please send us details of your application for advice on this or any other problem where the Hallite 87 may solve your bearing problem.

87

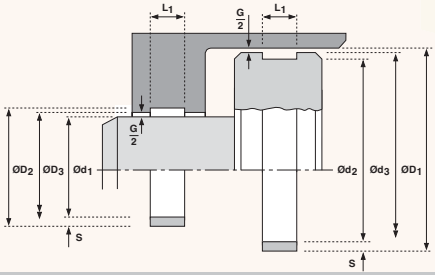

Ø RANGE Ød1	ØD1	L1	S	G MAX	G MIN	W	PART NUMBER
8 - 20	10 - 25	2.5	1.55	AS REQUIRED BY THE SEAL EXTRUSION GAP (see note below)	0.6	1.0 - 2.0	6663000
8 - 20	10 - 25	4.0	1.55		0.6	1.0 - 2.0	6663100
20 - 75	25 - 80	5.6	2.50		0.7	2.0 - 3.5	6663200
35 - 300	40 - 320	9.7	2.50		0.7	2.5 - 7.0	6658800
35 - 300	40 - 320	10.0	2.00		0.7	2.5 - 7.0	6663300
120 - 900	125 - 900	15.0	2.50		0.8	5.0 - 18.0	6658900
120 - 900	125 - 900	15.0	2.00		0.8	5.0 - 18.0	6663400
200 - 900	200 - 900	20.0	2.00		0.8	7.0 - 18.0	6663500
200 - 900	200 - 900	20.0	2.50		1.0	7.0 - 18.0	6663600
300 - 900	300 - 900	25.0	2.50		1.0	10.0 - 18.0	6663700

For applications not using a seal G Max can be :

S	G Max
1.55	1.0
2.00	1.1
2.50	1.6

Cutting strip to length

Calculate the developed length of the strip, L_2 (the developed length is the circumferential length of the centre line of the strip when installed).

For piston mounting :

THE DEVELOPED LENGTH = π X (CYLINDER BORE DIAMETER - STRIP SECTION) - REQUIRED SPLIT

i.e. $L_2 = \pi \times (ØD_1\text{-}S) - W$

For gland mounting :

THE DEVELOPED LENGTH = π X (ROD DIAMETER + STRIP SECTION) - REQUIRED SPILT

i.e. $L_2 = \pi \times (Ød_1 + S) - W$

Cut to length, (L_2), using a sharp knife.

Bearing strip cutting angle

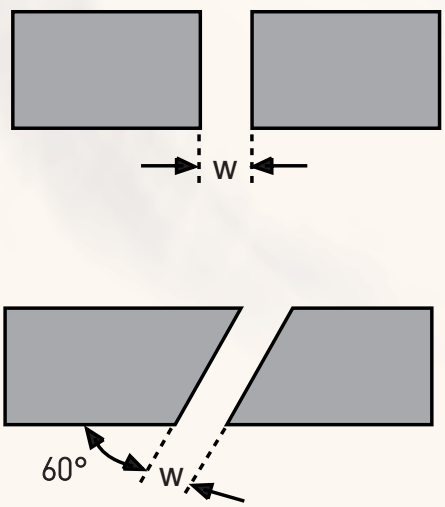

310

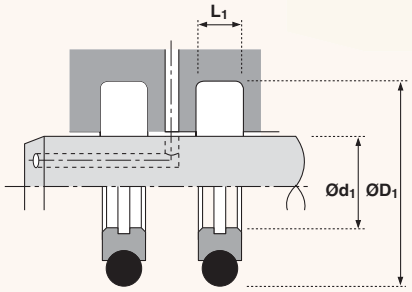

Ød1	TOL f9	ØD1	TOL H11	L1 +0.2 -0	PART No.
40	-0.025 -0.087	51.0	+0.19 +0.00	4.2	8679710‡
45	-0.025 -0.087	56.0	+0.19 +0.00	4.2	8679810‡
50	-0.025 -0.087	61.0	+0.19 +0.00	4.2	8679910‡
56	-0.030 -0.104	67.0	+0.19 +0.00	4.2	8680010‡
60	-0.030 -0.104	71.0	+0.19 +0.00	4.2	8680110
63	-0.030 -0.104	74.0	+0.19 +0.00	4.2	8680210‡
70	-0.030 -0.104	81.0	+0.22 +0.00	4.2	8680310
75	-0.030 -0.104	86.0	+0.22 +0.00	4.2	8680410
80	-0.030 -0.104	91.0	+0.22 +0.00	4.2	8680510
90	-0.036 -0.123	101.0	+0.22 +0.00	4.2	8680610
100	-0.036 -0.123	111.0	+0.22 +0.00	4.2	8680710
110	-0.036 -0.123	121.0	+0.25 +0.00	4.2	8680810
115	-0.036 -0.123	126.0	+0.25 +0.00	4.2	8680910
120	-0.036 -0.123	131.0	+0.25 +0.00	4.2	8681010

Ød1	TOL f9	ØD1	TOL H11	L1 +0.2 -0	PART No.
125	-0.043 -0.143	136.0	+0.25 +0.00	4.2	8681110
130	-0.043 -0.143	141.0	+0.25 +0.00	4.2	8681210
140	-0.043 -0.143	151.0	+0.25 +0.00	4.2	8681310
150	-0.043 -0.143	161.0	+0.25 +0.00	4.2	8681410
160	-0.043 -0.143	171.0	+0.25 +0.00	4.2	8681510
170	-0.043 -0.143	181.0	+0.29 +0.00	4.2	8681610
180	-0.043 -0.143	191.0	+0.29 +0.00	4.2	8681710
190	-0.050 -0.165	201.0	+0.29 +0.00	4.2	8681810
200	-0.050 -0.165	215.5	+0.29 +0.00	6.3	8681910
210	-0.050 -0.165	225.5	+0.29 +0.00	6.3	8682010
220	-0.050 -0.165	235.5	+0.29 +0.00	6.3	8682110
250	-0.050 -0.165	265.5	+0.32 +0.00	6.3	8682210

Technical details

	Metric		Inch	
Operating conditions				
Maximum Speed	5.0 m/sec		15.0 ft/sec	
Temperature Range	-30°C +100°C		-22°F +212°F	
Surface roughness	µmRa	µmRt	µinCLA	µinRMS
Dynamic Sealing Face Ød$_1$	0.1 <> 0.4	4 max	4 <> 16	5 <> 18
Static Sealing Face ØD$_1$ ØD$_2$	1.6 max	10 max	63 max	70 max
Static Housing Faces L$_1$	3.2 max	16 max	125 max	140 max
Chamfers & Radii				
Groove Section≤ S mm	3.4	4.4	6.1	8.0
Min Chamfer C mm	2.0	2.0	2.5	4.0
Max Fillet Rad r$_1$ mm	0.5	0.5	0.5	0.5
Max Fillet Rad r$_2$ mm	0.5	0.5	0.5	0.5
Tolerances	Ød$_1$	ØD$_1$	ØD$_2$	L$_1$
mm	f9	H9	H11	+0.2 -0

335

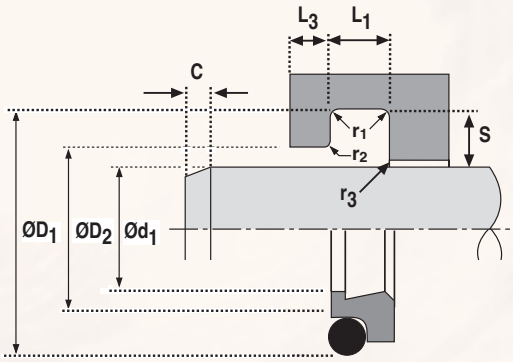

Design

The Hallite 335 is an O-ring energised double lip wiper, which is designed to exclude dirt from entering the cylinder and to collect traces of fluid passing the rod seal.

The standard design is made from bronze filled PTFE, activated by an NBR O-ring.

A number of other material options can be provided to extend operating conditions. Please ensure that the correct part number is specified for the material option as indicated.

The housing sizes listed meet ISO6195D.

Materials

	last two digits of part number
Wiper face O-ring Standard material PTFE/Bronze NBR	_ _ _ _ _ **20**
Material options:	
PTFE/Bronze FKM	_ _ _ _ _ **21**
PTFE/Glass NBR	_ _ _ _ _ **10**
PTFE/Glass FKM	_ _ _ _ _ **11**

Features

- **Protects primary seal from contamination**
- **Extends seal life**
- **Low friction no stick-slip**
- **High strength machined PTFE wiper**
- **Wide range of other materials and dimensions available for special applications**

NB A vent between the seal and wiper is recommended to avoid a pressure trap

335

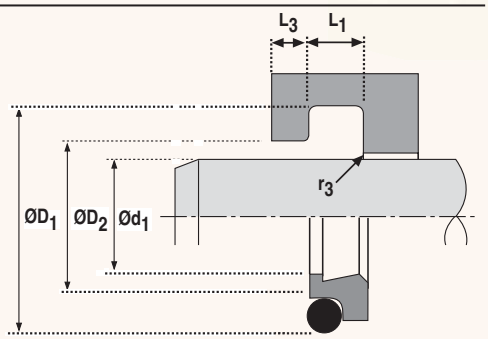

Ød1 f9	ØD1 H11	L1 +0.2	ØD2 H11	L3 min	r3 max	PART No.
20	26.80	5.00	21.50	2.00	0.80	87151_ _*
22	28.80	5.00	23.50	2.00	0.80	87152_ _*
25	31.80	5.00	26.50	2.00	0.80	87153_ _*
28	34.80	5.00	29.50	2.00	0.80	87154_ _*
32	38.80	5.00	33.50	2.00	0.80	87156_ _
36	42.80	5.00	37.50	2.00	0.80	87157_ _
40	46.80	5.00	41.50	2.00	0.80	87158_ _
40	48.80	6.30	41.50	3.00	0.80	87159_ _
45	51.80	5.00	46.50	2.00	0.80	87160_ _
45	53.80	6.30	46.50	3.00	0.80	87161_ _
50	56.80	5.00	51.50	2.00	0.80	87162_ _
50	58.80	6.30	51.50	3.00	0.80	87163_ _
56	62.80	5.00	57.50	2.00	0.80	87164_ _
56	64.80	6.30	57.50	3.00	0.80	87165_ _
63	69.80	5.00	64.50	2.00	0.80	87166_ _
63	71.80	6.30	64.50	3.00	0.80	87167_ _
70	78.80	6.30	71.50	3.00	1.00	87168_ _
70	82.20	8.10	72.00	4.00	1.00	87169_ _
80	88.80	6.30	81.50	3.00	1.00	87170_ _
80	92.20	8.10	82.00	4.00	1.00	87171_ _
90	98.80	6.30	91.50	3.00	1.00	87172_ _
90	102.20	8.10	92.00	4.00	1.00	87173_ _
100	108.80	6.30	101.50	3.00	1.00	87174_ _
100	112.20	8.10	102.00	4.00	1.00	87175_ _
110	118.80	6.30	111.50	3.00	1.00	87176_ _
110	122.20	8.10	112.00	4.00	1.00	87177_ _
125	133.80	6.30	126.50	3.00	1.00	87178_ _
125	137.20	8.10	127.00	4.00	1.00	87179_ _
140	152.20	8.10	142.00	4.00	1.00	87180_ _
140	156.00	9.50	142.50	5.00	1.50	87181_ _
160	172.20	8.10	162.00	4.00	1.00	87182_ _
160	176.00	9.50	162.50	5.00	1.50	87183_ _
180	192.20	8.10	182.00	4.00	1.00	87184_ _
180	196.00	9.50	182.50	5.00	1.50	87185_ _
200	212.20	8.10	202.00	4.00	1.00	87186_ _
200	216.00	9.50	202.50	5.00	1.50	87187_ _
220	232.20	8.10	222.00	4.00	1.00	87188_ _
220	236.00	9.50	222.50	5.00	1.50	87189_ _

* split housings recommended

Hallite
Fenner Advanced Sealing Technologies

OTP®

506

Technical details

	Metric		Inch	
Operating Conditions				
Temperature Range	-40°C +120°C		-40°F +250°F	
Limiting PV Values Lubricated*	Speed m/sec	Pressure MN/m^2	Speed ft/sec	Pressure p.s.i.
	0.1	10.0	0.3	1500
	1.0	6.0	3.0	900
	5.0	0.8	16.0	120
Typical Physical Properties				
Specific Gravity		1.27		1.27
Compression Stress at Failure	(Temp 23°C)	450 MN/m^2	(Temp 73°F)	65,000 p.s.i.
Compression Stress at Yield*	(Temp 23°C)	115 MN/m^2	(Temp 73°F)	16,500 p.s.i.
Compression Stress at Yield*	(Temp 80°C)	58 MN/m^2	(Temp 176°F)	8,500 p.s.i.
Coefficient of Thermal Conductivity		0.27 W/mK		0.16 Btu/hft °F
Coefficient of Thermal Expansion	Length	Thickness	Length	Thickness
	9×10^{-5}	13×10^{-5}	5×10^{-5}	7.3×10^{-5}
	per °C	per °C	per °F	per °F
Coefficient of Dynamic Friction on	Dry	Lubricated	Dry	Lubricated
steel surface (0.2 µm Ra) / (8 µin CLA)	0.50	0.06	0.50	0.06
Surface Roughness	µm Ra	µm Rt	µin CLA	µin RMS
Dynamic Sealing Face Ød$_1$,ØD$_1$	0.4	4 max	16	18
Static Sealing Face Ød$_2$,ØD$_2$, L$_1$	3.2 max	16 max	125 max	140 max
Bearing Strip Tolerances	L$_1$	S	L$_1$	S
	-0.1 to -0.6	-0.02 to -0.08	-0.005 to -0.025	-0.001 to -0.003
Width of Bearing Split – W	Ød$_1$ / ØD$_1$	W	Ød$_1$ / ØD$_1$	W
	Up to 50	3.00 - 1.50	Up to 2"	0.12 - 0.06
	Up to 120	5.00 - 3.50	Up to 5"	0.19 - 0.14
	Up to 250	9.00 - 7.25	Up to 10"	0.35 - 0.29
	Up to 550	17.00 - 15.00	Up to 22"	0.67 - 0.59
Housing Details & Tolerances				
Rod	Ød$_1$	f9	Ød$_1$	f9
	ØD$_2$ = Ød$_1$+2S	up to : Ø80 H10	ØD$_2$ = Ød$_1$ + 2S	up to : Ø3in H10
		above : Ø80 H9		above : Ø3in H9
	ØD$_3$ = Ød$_1$+G	G min / max	ØD$_3$ = Ød$_1$ + G	G min / max
	L$_1$	+ 0.2 -0 mm	L$_1$	+ 0.008 -0 in
Piston	ØD$_1$	H11	ØD$_1$	H11
	Ød$_2$=ØD$_1$-2S	f9	Ød$_2$=ØD$_1$ -2S	f9
	Ød$_3$ = ØD$_1$- G	G min / max	Ød$_3$ = ØD$_1$ - G	G min / max
	L$_1$	+ 0.2 -0 mm	L$_1$	+ 0.008 -0 in

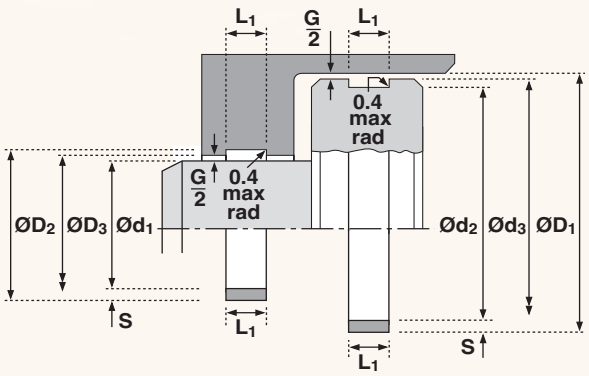

* Please note that for reciprocating applications, the compressive stress at yield should be used for design calculations. For rotary shafts use the limiting P.V. values. It is suggested that a 2:1 factor of safety is applied.

Design

Hallite 506 bearing strip is available in three forms: cut rings, spiral lengths and flat coils. Hallite 506 provides an extremely effective, hard wearing and easy to use bearing material.

Manufactured to very tight tolerances and providing bearing solutions for reciprocating, oscillating and slow rotary movement applications, Hallite 506 bearing strip is used in many of today's most arduous hydraulic applications around the world. Commonly fitted in reciprocating cylinders as rod and piston bearings, Hallite 506 is capable of withstanding extreme side-loads preventing metal to metal contact. The material's design incorporates micro indentations on the bearing strip's surface to trap fluid and provide built-in lubrication to the bearing. The 506 bearing strip is manufactured by a patented process, using a woven fabric reinforced polyester resin material and is proven to be compatible with a wide range of fluids, including mineral oils, water based fluids and phosphate esters, to produce a rectangular section strip which is available in a wide range of inch and metric sizes including cross sections specified in ISO 10766.

506

Hallite 506 bearing strip is available in three forms:

Cut Rings

Ready made bearings, cut to size and to customer specifications, and ready for installation, Hallite 506 bearings have become an industry standard favoured by designers and specifiers alike. Generally produced for the medium to high volume user.

Cut Rings

Spiral Lengths

Available in a wide range of preformed diameters, spirals are supplied in continuous lengths to suit a range of inside and outside diameters. Ideal for lower volume users requiring various diameters.

Spiral Lengths

Flat Coils

Packaged in a dispenser for ease of storage and handling, flat coils are supplied in 10 metre lengths suitable for a wide range of diameters and are ideal for those using or supplying one off bearings for small volume requirements.

Flat Coils

The ranges shown on the following pages are Hallite's most popular sizes. The section ranges identify section and groove width; from these nearly any diameter of cut ring or spiral length can be manufactured. If you cannot find the size you are looking for, please contact your local Hallite sales office for additional size information.

All standard bearing strip is printed with a size reference and includes distance marking every 100mm on metric size sections and every six inches on inch size sections for guidance only.

When ordering please clearly state whether cut rings, spiral lengths or flat coils are required. For cut rings and spiral lengths please state whether rod or piston application and provide inside (Ød) or outside (ØD) diameters, groove width (L1) and section (S) dimensions and where spiral lengths are ordered also specify length required. For flat coils please specify groove width (L1) and section (S) dimensions.

Cutting bearing strip to size

1. Select the groove width (L1) and section (S) required.

2. In the case of a rod bearing, position the bearing strip around the rod or in the case of a piston bearing, place it in the piston groove and mark the point of overlap. Determine the correct width of bearing split (W) for the Ød or ØD being used, as indicated in the technical details, and make a second mark.

3. Remove the strip and cut at the second marked position to the desired angle using secateurs or other similar cutting tool.

It is recommended that the standard cutting angle is used for the majority of applications.

Features

- **High load capability**
- **Infinite length range**
- **Virtually zero swell**
- **Self lubricating**
- **Low friction**
- **Cut to length**
- **Very large range of sizes**

Bearing split cutting angle

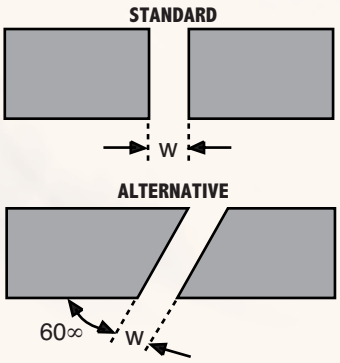

25 - 41	45 - 90	2.0	10.0	0.7	8501310
35 - 70	74 - 160	2.0	10.0	0.7	8502610
70 - 155	159 - 310	2.0	10.0	0.7	8502252
35 - 50	54 - 110	2.0	15.0	0.7	8503357
50 -100	104 - 210	2.0	15.0	0.7	8503175
90 - 180	184 - 370	2.0	15.0	0.7	8503358
25 - 30	35 - 70	2.5	5.6	0.7	8502000‡
25 - 50	55 - 110	2.5	5.6	0.7	8502020‡
50 - 100	105 - 210	2.5	5.6	0.7	8502040‡
25 - 40	45 - 90	2.5	9.7	0.7	8502100‡
35 - 70	75 - 150	2.5	9.7	0.7	8502120‡
70 - 150	155 - 310	2.5	9.7	0.7	8502140‡
40 - 50	55 - 110	2.5	13.0	0.7	8502200
50 - 100	105 - 210	2.5	13.0	0.7	8502220
90 - 180	185 - 370	2.5	13.0	0.8	8502230
40 - 50	55 - 110	2.5	15.0	0.7	8502300‡
50 - 100	105 - 210	2.5	15.0	0.7	8502330‡
90 - 180	185 - 370	2.5	15.0	0.8	8502350‡

506

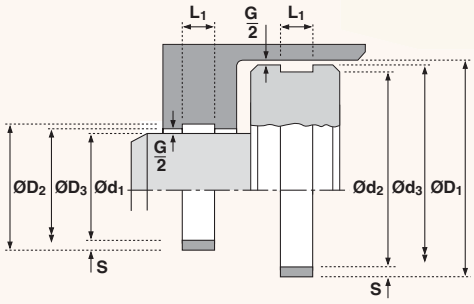

metric – spiral lengths

Ø RANGE Ød1	ØD1	S	L1	G MAX	G MIN*	PART No.
50 - 100	106 - 210	3.0	9.7	As required by the seal extrusion gap For applications not using a seal G MAX can be 1.6mm.	0.8	8503370
100 - 150	156 - 310	3.0	9.7		0.8	8503371
50 - 60	66 - 120	3.0	12.8		0.7	8503037
60 - 104	110 - 220	3.0	12.8		0.8	8503038
90 - 149	155 - 300	3.0	12.8		0.8	8503039
55 - 80	86 - 170	3.0	20.0		0.8	8503124
80 - 150	156 - 310	3.0	20.0		0.8	8502635
140 - 250	256 - 510	3.0	20.0		0.8	8503189
50 - 75	81 - 160	3.02	15.0		0.7	8502734
60 - 80	68 - 170	4.0	6.1		0.8	8503359
80 - 150	158 - 310	4.0	6.1		0.8	8503360
150 - 250	258 - 510	4.0	6.1		0.8	8503361
60 - 80	88 - 170	4.0	9.7		0.8	8503362
80 - 150	158 - 310	4.0	9.7		0.8	8503363
150 - 250	258 - 510	4.0	9.7		0.8	8503364
60 - 80	88 - 170	4.0	20.0		0.8	8503365
80 - 150	158 - 310	4.0	20.0		0.8	8503366
150 - 250	258 - 510	4.0	20.0		0.8	8503191
120 -150	158 - 310	4.0	25.0		0.8	8503367‡
150 - 250	258 - 510	4.0	25.0		0.8	8503192‡
120 -150	158 - 310	4.0	30.0		0.8	8503368
150 - 250	258 - 510	4.0	30.0		0.8	8503193
170 - 200	208 - 410	4.0	40.1		0.8	8503179
200 - 300	308 - 610	4.0	40.1		0.8	8503180

Within the size range, items suffixed ‡ indicate cross sections to ISO 10766.

500 series

Hallite 500 Series

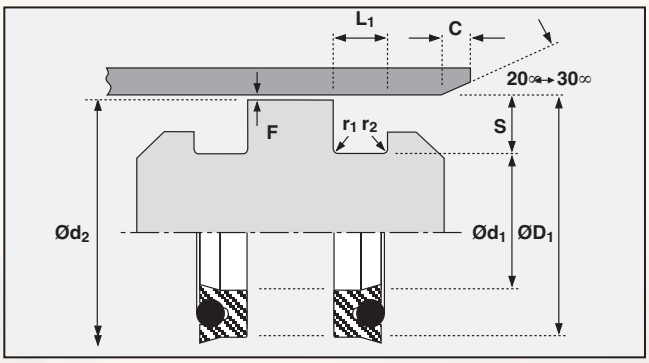

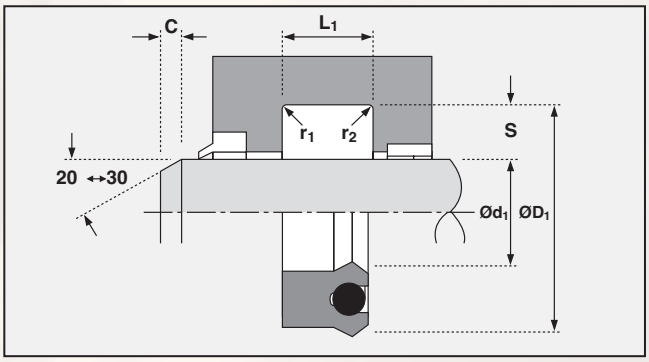

General

The Hallite 500 series is a family of high performance loaded 'U' cups are designed to interchange in standard North American housings. Since the launch in 1988, these seals have become accepted as the leading alternative choice for quality and cost effectiveness.

Hallite offer three profiles of single acting seals in the 500 Series (511,512,513). Covering most applications from mobile hydraulics to industrial cylinders, all have been well proven and are standard fitment in many of the leading cylinder and O.E.M. manufacturers worldwide. Each catalogue page outlines the operating condition parameters to give optimum performance and life. For applications outside, or at the extreme, of these figures, it is recommended that guidance is sought from Hallite Seals.

Material

All Hallite materials are subject to stringent quality controls to ensure consistency both in the manufacture and in use. The 500 series are manufactured, as a standard, in polyurethane with a nitrile 'O' ring. Other materials are available for combating the effects of temperature extremes or fluid variations.

Media

All seals are suitable for mineral based hydraulic fluids. As the fluid can have enormous consequences for the life and performance, particularly at higher temperatures, it is advised that guidance is sought if non-standard fluid is used.

Extrusion Gaps

Extrusion gaps can be minimised by the use of glands or pistons with integral bearings. However, better bearing performance is often achieved by the use of remote bearings, which inevitably means that the extrusion gap is increased to achieve adequate metal to metal clearance, (refer to data sheets for individual seal types).
For this reason, guidance should be sought from the Hallite technical department if remote bearings are to be used with seals under 1/4" cross section.

500 series (inch) - specified tolerances for piston applications

Seal Cross Section (S)	Bore Tolerance ($ØD_1$)	Piston Spigot Tolerance ($Ød_1$)	Groove Width Tolerance (L_1)
1/8" (.125)	+0.002 -0.000	+0.000 -0.002	+0.015 -0.000
3/16" (.187)	+0.002 -0.000	+0.000 -0.002	+0.015 -0.000
1/4" (.250)	+0.003 -0.000	+0.000 -0.003	+0.015 -0.000
5/16" (.312)	+0.003 -0.000	+0.000 -0.004	+0.015 -0.000
3/8" (.375)	+0.003 -0.000	+0.000 -0.005	+0.015 -0.000
1/2" (.500)	+0.004 -0.000	+0.000 -0.007	+0.015 -0.000

500 series (inch) - specified tolerances for rod applications

Seal Cross Section (S)	Rod Tolerance ($Ød_1$)	Gland Bore Tolerance ($ØD_1$)	Groove Width Tolerance (L_1)
1/8" (.125)	+0.000 -0.001	+0.002 -0.000	+0.015 -0.000
3/16" (.187)	+0.000 -0.002	+0.002 -0.000	+0.015 -0.000
1/4" (.250)	+0.000 -0.002	+0.003 -0.000	+0.015 -0.000
5/16" (.312)	+0.000 -0.002	+0.004 -0.000	+0.015 -0.000
3/8" (.375)	+0.000 -0.002	+0.005 -0.000	+0.015 -0.000
1/2" (.500)	+0.000 -0.003	+0.007 -0.000	+0.015 -0.000

Hallite
Fenner Advanced Sealing Technologies

OTP®

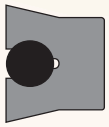

511

Technical details

	Metric		Inch
Operating conditions			
Maximum Speed	0.5 m/sec		1.5 ft/sec
Temperature Range	-40°C +110°C		-40°F +230°F
Maximum Pressure	350 bar		5000 p.s.i.

Maximum extrusion gap

Figures show the maximum permissible gap all on one side, for rod seals using minimum rod Ø and maximum clearance Ø and for piston seals using the minimum clearance Ø and maximum bore Ø. Refer to Housing Design section.

(1/4" section and above)			
Pressure bar	160	250	350
Pressure p.s.i.	2400	3750	5000
Maximum Gap in	0.024	0.020	0.016

Surface roughness	µmRa	µmRt	µinCLA	µinRMS
Dynamic Sealing Face – Rod $Ød_1$	0.1 <> 0.4	4 max	4 <> 16	5 <> 18
Static Sealing Face – Rod $ØD_1$	1.6 max	10 max	63 max	70 max
Dynamic Sealing Face – Piston $ØD_1$	0.1 <> 0.4	4 max	4 <> 16	5 <> 18
Static Sealing Face – Piston $Ød_1$	1.6 max	10 max	63 max	70 max
Static Housing Faces L_1	3.2 max	16 max	125 max	140 max

Chamfers & Radii							
Groove Section ≤ S in	0.125	0.187	0.250	0.312	0.375	0.500	0.625
Min Chamfer C in	0.093	0.093	0.125	0.156	0.187	0.187	0.217
Max Fillet Rad r_1 in	0.008	0.008	0.016	0.032	0.032	0.032	0.047
Max Fillet Rad r_2 in	0.016	0.016	0.032	0.047	0.047	0.047	0.062

Tolerances

Please refer to specified tolerances in the introduction page - Hallite 500 Series

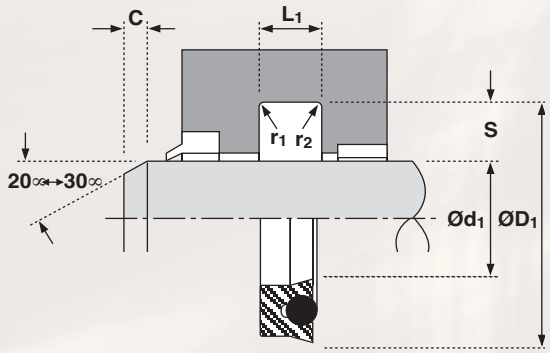

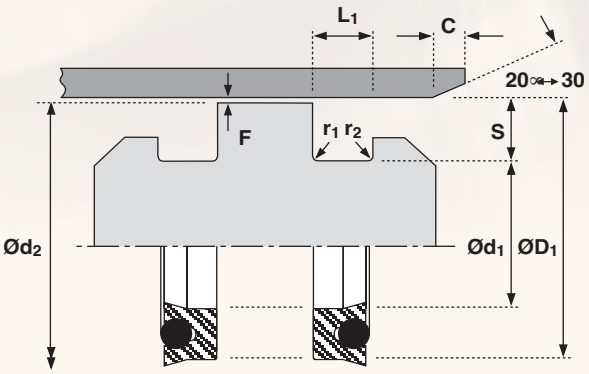

Technical details shown are for standard material option.

Design

The Hallite 511 is a loaded U cup utilising a polyurethane or polyester shell energised by a high specification resilient O ring.

At zero or low pressure, the O ring helps to increase the sealing force preventing any bypass. As pressure rises the sealing force increases and the O ring ensures complete lip actuation under most conditions.

The symmetry of the seal allows it to be used on both rod and piston applications and its flexibility enables easy installation. Ideally suited for single acting applications, the Hallite 511 can also be fitted back to back for use in double acting applications.

Features

- **Flexible for easy installation**
- **Excellent resistance to abrasion**
- **Positive lip actuation**
- **Knife trimmed precision sealing lips**
- **Compact housing**
- **Wide range of sizes**

Materials

Seal material – O-Ring	last digits of part number
Standard material:	
Polyurethane - NBR	_ _ _ _ _ **10**
Material options:	
Polyester - NBR	_ _ _ _ _ **11**
Hallite 361 - NBR	_ _ _ _ _ **16**

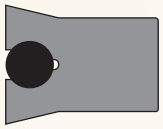

512

Technical details

	Metric		Inch	
Operating conditions				
Maximum Speed	0.5 m/sec		1.5 ft/sec	
Temperature Range	-40°C + 110°C		-40°F + 230°F	
Maximum Pressure	350 bar		5000 p.s.i.	
Maximum extrusion gap	**Figures show the maximum permissible gap all on one side for rod seal using minimum rod Ø and maximum clearance Ø and for piston seals using the minimum clearanceØ and maximum bore Ø. Refer to Housing Design section.**			
(1/4 section and above)				
Pressure bar	160	250	350	
Pressure p.s.i.	2400	3750	5000	
Maximum Gap in	0.024	0.020	0.016	
Surface roughness	µmRa	µmRt	µinCLA	µinRMS
Dynamic Sealing Face - Rod Ød$_1$	0.1 <> 0.4	4 max	4 <> 16	5 <> 18
Static Sealing Face - Rod ØD$_1$	1.6 max	10 max	63 max	70 max
Dynamic Sealing Face – Piston ØD$_1$	0.1 <> 0.4	4 max	4 <> 16	5 <> 18
Static Sealing Face – Piston Ød$_1$	1.6 max	10 max	63 max	70 max
Static Housing Faces L$_1$	3.2 max	16 max	125 max	140 max

Chamfers & Radii

Groove Section ≤ S in	0.125	0.187	0.250	0.312	0.375	0.500
Min Chamfer C in	0.093	0.093	0.125	0.156	0.187	0.187
Max Fillet Rad r$_1$ in	0.008	0.008	0.016	0.032	0.032	0.032
Max Fillet Rad r$_2$ in	0.016	0.016	0.032	0.047	0.047	0.047

Tolerances Please refer to specified tolerances in the introduction page - Hallite 500 Series

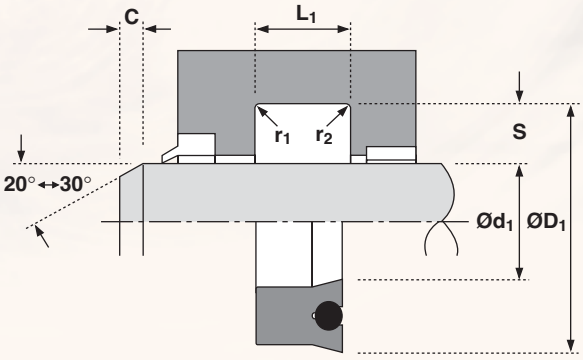

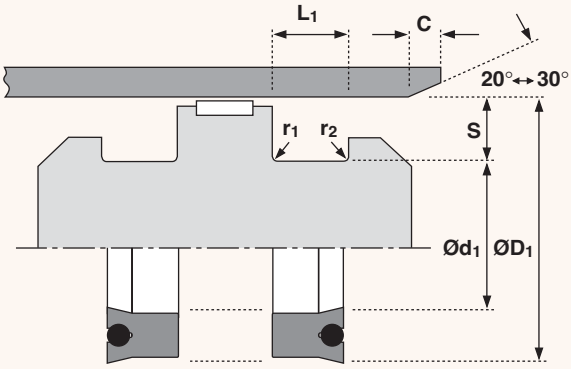

Technical details shown are for standard material option.

DESIGN

The Hallite 512 is a standard profile loaded U cup utilising a polyurethane or polyester shell energised by a high specification O ring.

At zero or low pressure, the O ring helps to increase the sealing force, preventing any by-pass. As pressure rises, so the sealing force increases, with the O ring ensuring complete lip actuation under most conditions.

The deep profile of this seal provides extra stability needed to resist rolling in the groove and together with the knife trimmed precision sealing lips, the results are improved life and sealing. The 512 can be used for single acting applications or fitted back to back for double acting applications. Although it can also be used as a rod seal, Other profiles like 513, 605 or 621 are a better option.

FEATURES

- **Flexible for easy installation**
- **Excellent resistance to abrasion**
- **Positive lip actuation**
- **Deep profile for stability**
- **Wide range of sizes and material options**

MATERIALS

Seal material - O-Ring	last digits of part number
Standard material:	
Polyurethane-NBR	_ _ _ _ _ **10**
Material options:	
Polyester-NBR	_ _ _ _ _ **11**
Hallite 361-NBR	_ _ _ _ _ **16**

Hallite
Fenner Advanced Sealing Technologies

OTP®

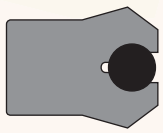

513

Technical details

	Metric		Inch	
Operating conditions				
Maximum Speed	0.5 m/sec		1.5 ft/sec	
Temperature Range	-40°C +110°C		-40°F +230°F	
Maximum Pressure	350 bar		5000 p.s.i.	
Maximum extrusion gap	**Figures show the maximum permissible gap all on one side using minimum rod Ø and maximum clearance Ø. Refer to Housing Design section.**			
(1/4" section and above)				
Pressure bar	160	250	350	
Pressure p.s.i.	2400	3750	5000	
Maximum Gap in	0.024	0.020	0.016	
Surface roughness	µmRa	µmRt	µinCLA	µinRMS
Dynamic Sealing Face Ød$_1$	0.1 <> 0.4	4 max	4 <> 16	5 <> 18
Static Sealing Face ØD$_1$	1.6 max	10 max	63 max	70 max
Static Housing Faces L$_1$	3.2 max	16 max	125 max	140 max

Chamfers & Radii						
Groove Section ≤ S in	0.125	0.187	0.250	0.312	0.375	0.500
Min Chamfer C in	0.093	0.093	0.125	0.156	0.187	0.187
Max Fillet Rad r$_1$ in	0.008	0.008	0.016	0.032	0.032	0.032
Max Fillet Rad r$_2$ in	0.016	0.016	0.032	0.047	0.047	0.047

Tolerances

Please refer to specified tolerances in the introduction page - Hallite 500 Series

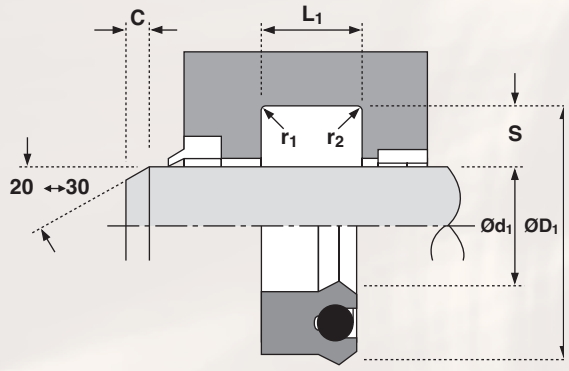

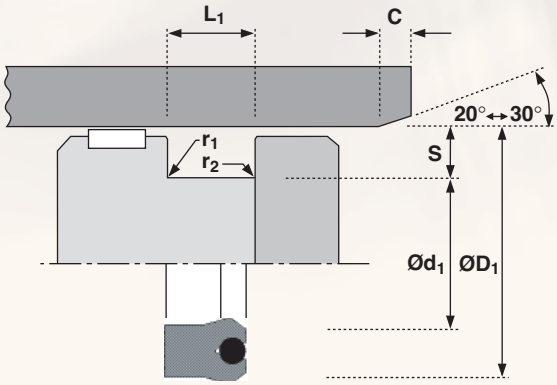

Technical details shown are for standard material option.

Design

The Hallite 513 is a standard profile loaded U cup utilising a polyurethane or polyester shell energised by a high specification resilient O ring.

At zero or low pressure the O ring helps to increase the sealing force preventing any bypass. As pressure rises the sealing force increases and the O ring provides complete lip actuation under most conditions.

The precision trimmed sealing lips ensure optimum sealing action.

Features

- **Flexible for easy installation**
- **Excellent resistance to abrasion**
- **Positive lip actuation**
- **Knife trimmed precision sealing lips**
- **Compact housing**
- **Wide range of sizes**
- **Material options**

Materials

Seal material – O-Ring	last digits of part number
Standard material:	
Polyurethane - NBR	_ _ _ _ _ **10**
Material options:	
Polyester - NBR	_ _ _ _ _ **11**
Hallite 361 - NBR	_ _ _ _ _ **16**

Hallite
Fenner Advanced Sealing Technologies

OTP®

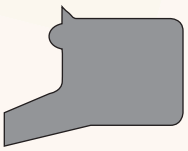

520

Technical details

	Metric		Inch	
Operating conditions				
Maximum Speed	4.0 m/sec		12.0 ft/sec	
Temperature Range	-45°C +110°C		-50°F +230°F	
Surface roughness	µmRa	µmRt	µinCLA	µinRMS
Dynamic Sealing Face Ød$_1$	0.1 <> 0.4	4 max	4 <> 16	5 <> 18
Static Sealing Face ØD$_1$ ØD$_2$	1.6 max	10 max	63 max	70 max
Static Housing Faces L$_1$	3.2 max	16 max	125 max	140 max
Radii				
Max Fillet Rad r$_1$ in	0.016			
Max Fillet Rad r$_2$ in	0.016			
Tolerances	Ød$_1$	ØD$_1$	ØD$_2$	L$_1$
in	f9	±0.003	±0.005	+0.004 -0

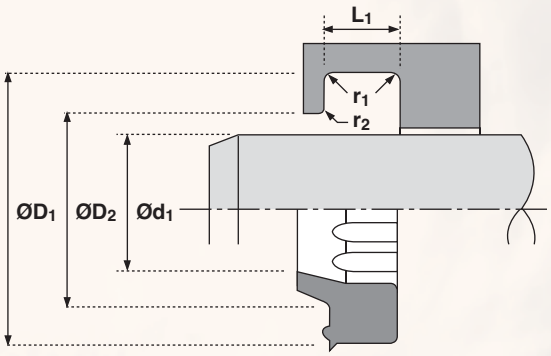

Design

The Hallite 520 snap-in rod wiper has been designed to fit "Universal" style housings. The proportions of the wiping lip ensure that contact is maintained with the surface of the rod to remove heavily deposited mud, ice, etc. The outside diameter contacts the housing diameter and has a sealing lip to prevent moisture entering the groove. The moulded ribs on the internal diameter provides extra stability to the seal and help prevent pressure trapping.

The Hallite 520 is available in two polyurethane or a polyester based compound and can be used with a split housing, however the majority can be installed in a blind housing with care.

Features

- **'Crush Lip' and 'Face Bead' provide effective seal on housing**
- **Low wear long life**
- **Cost effective**
- **Pressure relief ribs**
- **Polyester material for heavy duty applications**

Material option

The part numbers shown are for 93 IRHD polyurethane. If you require this product in 55D polyester or 96 IRHD Hallite 361 polyurethane, please change the last digit of the part number when ordering.

For example:

8880910 = polyurethane
8880911 = polyester
8880916 = Hallite 361

Hallite
Fenner Advanced Sealing Technologies

OTP®

533

Technical details

	Metric		Inch	
Operating conditions				
Maximum Speed	5.0 m/sec		15.0 ft/sec	
TemperatureRange	-40°C + 120°C		-40°F + 250°F	
Surface roughness	µmRa	µmRt	µinCLA	µinRMS
Dynamic Sealing Face – Rod $Ød_1$	0.4	4 max	16	18
Static Sealing Face – Rod $ØD_2$ L_1	3.2 max	16 max	125 max	140 max
Dynamic Sealing Face – Piston $ØD_1$	0.4	4 max	16	18
Static Sealing Face – Piston $Ød_2$ L_1	3.2 max	16 max	125 max	140 max
Housing Details & Tolerances				
L_1 in	+0.015 +0.010			
r_1 in	0.016 max			
Rod $Ød_1$ in	f9			
$ØD_2$ in	$Ød_1$ + 2S	+0.004 -0.000		
$ØD_3$ in	$Ød_1$ + G			
Piston $ØD_1$ in	H11			
$Ød_2$ in	$ØD_1$ -2S	+0.000 -0.004		
$Ød_3$ in	$ØD_1$ - G			
1/8 nominal cross sections - in	S = 0.126	G max 0.080	G min 0.031	
3/32 nominal cross sections - in	S = 0.093	G max 0.060	G min 0.031	

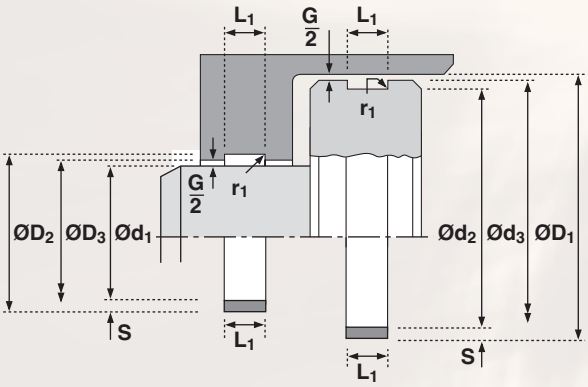

Design

Hallite 533 glass filled nylon wear rings are designed for reciprocating piston and rod bearing applications.

The material is heat stabilised 33% glass reinforced nylon 66, which offers excellent bearing properties. The material is compatible with hydraulic and lubricating oils. The material is not recommended for use in water based fluids (HFA) or where significant water is present, due to the swell of the nylon. For these applications the use of Hallite 506 or Hallite 63 bearings are recommended.

Note: Metric sizes are also available upon request. For further information about these and any other sizes that you are looking for, please contact your local Hallite sales office.

Features

- **Moulded to size**
- **Easy installation**
- **Robust**
- **Long life**
- **Economical**

601

Technical details

	Metric			Inch		
Operating conditions						
Maximum Speed	1.0 m/sec			3.0 ft/sec		
Temperature Range	-45°C +110°C			-50°F +230°F		
Maximum Pressure	400 bar*			6,000 p.s.i.*		

Maximum extrusion gap

Figures show the maximum permissible gap all on one side, for rod seals using minimum rod Ø and maximum clearance Ø and for piston seals using the minimum clearance Ø and maximum bore Ø. Refer to Housing Design section.

Pressure bar	160	250	400
Maximum Gap mm	0.6	0.5	0.4
Pressure p.s.i.	2400	3750	6000
Maximum Gap in	0.024	0.020	0.016

Surface roughness	µmRa	µmRt	µinCLA	µinRMS
Dynamic Sealing Face – Rod Ød$_1$	0.1 ‹› 0.4	4 max	4 ‹› 16	5 ‹› 18
Static Sealing Face – Rod ØD$_1$	1.6 max	10 max	63 max	70 max
Dynamic Sealing Face – Piston ØD$_1$	0.1 ‹› 0.4	4 max	4 ⇨ 16	5 ‹› 18
StaticSealing Face – Piston Ød$_1$	1.6 max	10 max	63 max	70 max
Static Housing Faces L$_1$	3.2 max	16 max	125 max	140 max

Chamfers & Radii

Groove Section<S mm	4.0	5.0	7.5	10.0	12.5	15.0	20.0
Min Chamfer C mm	3.0	3.5	5.0	6.5	7.0	8.0	10.0
Max Fillet Rad r$_1$ mm	0.2	0.4	0.8	0.8	1.2	1.6	1.6
Max Fillet Rad r$_2$ mm	0.4	0.8	1.2	1.2	1.6	2.4	2.4
Groove Section≤ S in	0.125	0.187	0.250	0.312	0.375	0.500	
Min Chamfer C in	0.093	0.093	0.125	0.156	0.187	0.217	
Max Fillet Rad r$_1$ in	0.008	0.008	0.016	0.032	0.032	0.032	
Max Fillet Rad r$_2$ in	0.016	0.016	0.032	0.047	0.047	0.047	

Tolerances	Ød$_1$	ØD$_1$	L$_1$ mm	L$_1$ in
Rod	f9	Js11	+0.25 -0	+0.010 -0
Piston	js11	H9	+0.25 -0	+0.010 -0

* Pressure rating of seal can be extended to 700 bar /10,000p.s.i. with the use of a back up ring.
If this option is required seek advice from your local Hallite Seals sales office.

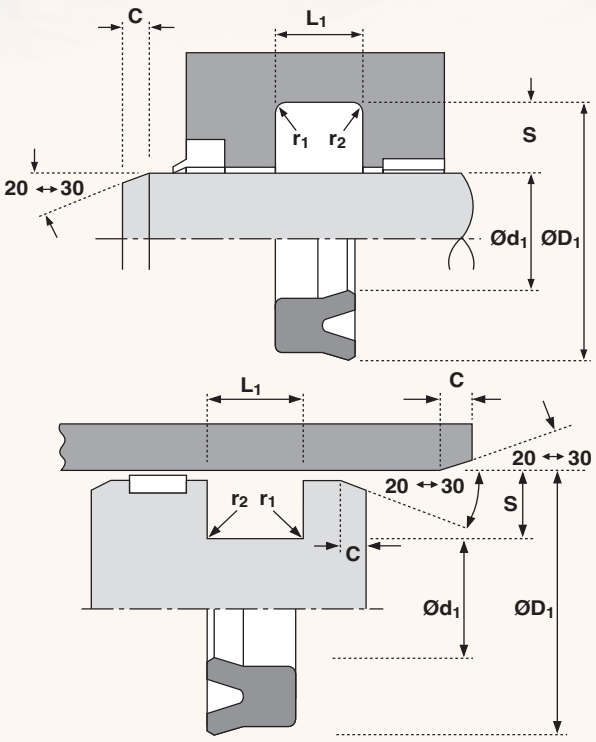

Design

The Hallite 601 is a high performance general purpose seal suitable for rod and piston use.

Manufactured in Hythane® 181 – Hallite's 601 is engineered to effect a good seal in most industrial cylinder applications.

The sealing lips are accurately machine trimmed to ensure good low pressure sealing while the material resists extrusion at high pressures.

Features

- **General purpose seal**
- **Excellent temperature resistance**
- **ease of installation**

NB: Hallite 606 is a preferred option for back to back piston applications.

Part numbers commencing 46 . . . . . are designed to suit popular Asian housings.

Part numbers suffixed by "‡" indicate housing sizes to meet ISO5597.

Size lists give "on line" tolerances for rod applications.

601

For piston sealing tolerances refer to technical details

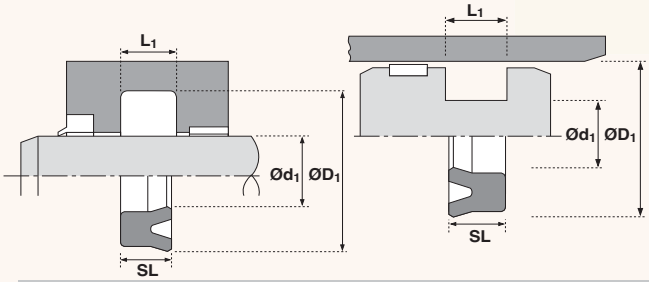

Ød1	TOL f9	ØD1	TOL Js11	SL	L1 +0.25-0	PART No.
4.5	-0.010 -0.040	12.5	+0.06 -0.06	4.4	5.0	4506701
5	-0.010 -0.040	12	+0.06 -0.06	5.5	6.5	4508601
6	-0.010 -0.040	13	+0.06 -0.06	8.0	9.0	4460300
10	-0.013 -0.049	18	+0.06 -0.06	6.0	6.6	4299900
10	-0.013 -0.049	20	+0.07 -0.07	8.0	9.0	4600000
12	-0.016 -0.059	18	+0.06 -0.06	6.0	7.0	4621300
12	-0.016 -0.059	20	+0.07 -0.07	4.4	5.0	4182501‡
12	-0.016 -0.059	25	+0.07 -0.07	8.0	9.0	4600100
14	-0.016 -0.059	22	+0.07 -0.07	4.4	5.0	4182601‡
14	-0.016 -0.059	22	+0.07 -0.07	5.0	5.7	4604000
14	-0.016 -0.059	24	+0.07 -0.07	8.0	9.0	4600200
15	-0.016 -0.059	25	+0.07 -0.07	8.0	9.0	4600300
16	-0.016 -0.059	24	+0.07 -0.07	4.4	5.0	4182701‡
16	-0.016 -0.059	24	+0.07 -0.07	5.0	5.7	4604100
16	-0.016 -0.059	26	+0.07 -0.07	8.0	9.0	4600400
18	-0.016 -0.059	26	+0.07 -0.07	4.4	5.0	4182901‡
18	-0.016 -0.059	26	+0.07 -0.07	5.0	5.7	4604200
18	-0.016 -0.059	28	+0.07 -0.07	7.3	8.0	4547900
18	-0.016 -0.059	28	+0.07 -0.07	8.0	9.0	4600500
20	-0.020 -0.072	28	+0.07 -0.07	4.4	5.0	4183001‡
20	-0.020 -0.072	28	+0.07 -0.07	5.0	5.7	4604300
20	-0.020 -0.072	30	+0.07 -0.07	8.0	9.0	4600600
20	-0.020 -0.072	40	+0.08 -0.08	12.0	13.0	4621900

Ød1	TOL f9	ØD1	TOL Js11	SL	L1 +0.25-0	PART No.
22	-0.020 -0.072	30	+0.07 -0.07	4.4	5.0	4183101‡
22	-0.020 -0.072	35	+0.08 -0.08	10.0	11.0	4600700
22	-0.020 -0.072	40	+0.08 -0.08	10.0	11.0	4572900
22.4	-0.020 -0.072	30	+0.07 -0.07	5.0	5.7	4604400
22.4	-0.020 -0.072	32.4	+0.08 -0.08	8.0	9.0	4600800
23.5	-0.020 -0.072	31.5	+0.08 -0.08	5.0	5.7	4621500
25	-0.020 -0.072	33	+0.08 -0.08	4.4	5.0	4183301‡
25	-0.020 -0.072	33	+0.08 -0.08	5.0	5.7	4604500
25	-0.020 -0.072	35	+0.08 -0.08	8.0	9.0	4600900
25	-0.020 -0.072	35	+0.08 -0.08	10.0	11.0	4362600
25	-0.020 -0.072	38	+0.08 -0.08	8.0	9.0	4601000
25	-0.020 -0.072	38	+0.08 -0.08	10.0	11.0	4621400
25	-0.020 -0.072	40	+0.08 -0.08	10.0	11.0	4601100
26	-0.020 -0.072	40	+0.08 -0.08	9.0	10.0	4584900
28	-0.020 -0.072	35.5	+0.08 -0.08	5.0	5.7	4604600
28	-0.020 -0.072	36	+0.08 -0.08	6.5	7.1	4506201
28	-0.020 -0.072	38	+0.08 -0.08	5.6	6.3	4183401‡
28	-0.020 -0.072	40	+0.08 -0.08	10.0	11.0	4601200
28	-0.020 -0.072	43	+0.08 -0.08	10.0	11.0	4601300
30	-0.020 -0.072	37	+0.08 -0.08	6.0	7.0	4596800
30	-0.020 -0.072	40	+0.08 -0.08	5.6	6.3	4183501
30	-0.020 -0.072	40	+0.08 -0.08	6.0	7.0	4604700
30	-0.020 -0.072	40	+0.08 -0.08	8.0	9.0	4596900

601

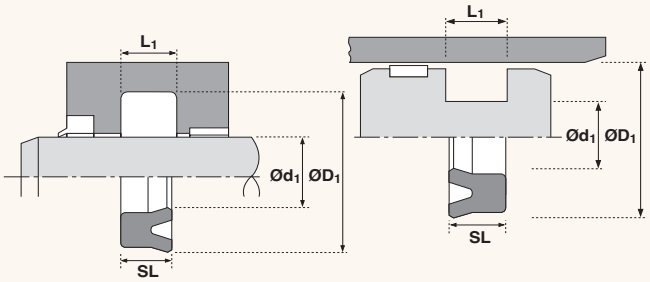

For piston sealing tolerances refer to technical details

Ød1	TOL f9	ØD1	TOL Js11	SL	L1 +0.25-0	PART No.
30	-0.020 -0.072	40	+0.08 -0.08	10.0	11.0	4362700
30	-0.020 -0.072	45	+0.08 -0.08	10.0	11.0	4601400
31.5	-0.025 -0.087	41.5	+0.08 -0.08	6.0	7.0	4604800
32	-0.025 -0.087	42	+0.08 -0.08	5.6	6.3	4183601‡
32	-0.025 -0.087	42	+0.08 -0.08	6.0	7.0	4604900
32	-0.025 -0.087	42	+0.08 -0.08	10.0	11.0	4362800
32	-0.025 -0.087	47	+0.08 -0.08	10.0	11.0	4621200
35	-0.025 -0.087	45	+0.08 -0.08	6.0	7.0	4605000
35	-0.025 -0.087	45	+0.08 -0.08	7.0	8.0	4496000
35	-0.025 -0.087	48	+0.08 -0.08	10.0	11.0	4360300
35	-0.025 -0.087	50	+0.08 -0.08	10.0	11.0	4601500
35.5	-0.025 -0.087	45	+0.08 -0.08	6.0	7.0	4605100
35.5	-0.025 -0.087	50.5	+0.08 -0.08	10.0	11.0	4621100
36	-0.025 -0.087	46	+0.08 -0.08	5.6	6.3	4183701‡
38	-0.025 -0.087	48	+0.08 -0.08	6.0	7.0	4605200
38	-0.025 -0.087	50	+0.08 -0.08	9.0	10.0	4709400
38	-0.025 -0.087	55	+0.10 -0.10	9.7	11.0	4366000
38	-0.025 -0.087	58	+0.10 -0.10	9.7	11.0	4560100
40	-0.025 -0.087	50	+0.08 -0.08	5.6	6.3	4183801‡
40	-0.025 -0.087	50	+0.08 -0.08	6.0	7.0	4605300
40	-0.025 -0.087	50	+0.08 -0.08	10.0	11.0	4362900
40	-0.025 -0.087	55	+0.10 -0.10	9.9	11.0	4388500
40	-0.025 -0.087	55	+0.10 -0.10	10.0	11.0	4601600
40	-0.025 -0.087	60	+0.10 -0.10	12.0	13.0	4601700
45	-0.025 -0.087	55	+0.10 -0.10	5.6	6.3	4183901‡
45	-0.025 -0.087	55	+0.10 -0.10	6.0	7.0	4605400
45	-0.025 -0.087	55	+0.10 -0.10	10.0	11.0	4363000
45	-0.025 -0.087	56	+0.10 -0.10	7.0	8.0	4605500
45	-0.025 -0.087	60	+0.10 -0.10	10.0	11.0	4601800
45	-0.025 -0.087	65	+0.10 -0.10	10.0	11.0	4575000
46	-0.025 -0.087	56	+0.10 -0.10	6.0	7.0	4543900
48	-0.025 -0.087	63	+0.10 -0.10	10.0	11.0	4601900
50	-0.025 -0.087	60	+0.10 -0.10	5.6	6.3	4184001‡
50	-0.025 -0.087	60	+0.10 -0.10	6.0	7.0	4605600
50	-0.025 -0.087	60	+0.10 -0.10	10.0	11.0	4363100
50	-0.025 -0.087	65	+0.10 -0.10	10.0	11.0	4602000
50	-0.025 -0.087	70	+0.10 -0.10	12.0	13.0	4602100
52	-0.030 -0.104	62	+0.10 -0.10	10.0	11.0	4559000
53	-0.030 -0.104	63	+0.10 -0.10	6.0	7.0	4605700
55	-0.030 -0.104	65	+0.10 -0.10	6.0	7.0	4605800
55	-0.030 -0.104	75	+0.10 -0.10	12.0	13.0	4602200
56	-0.030 -0.104	66	+0.10 -0.10	6.0	7.0	4605900
56	-0.030 -0.104	71	+0.10 -0.10	8.4	9.5	4184201‡
60	-0.030 -0.104	70	+0.10 -0.10	6.0	7.0	4606000
60	-0.030 -0.104	70	+0.10 -0.10	10.0	11.0	4363200
60	-0.030 -0.104	71	+0.10 -0.10	7.0	8.0	4606100

601

For piston sealing tolerances refer to technical details

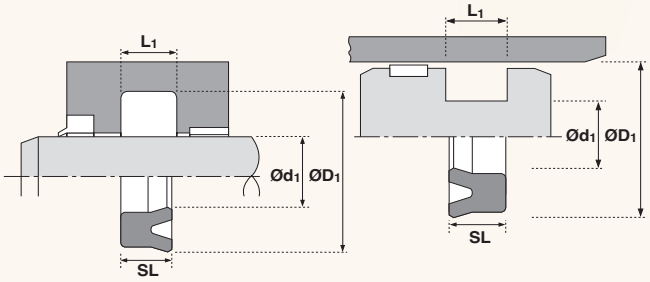

Ød1	TOL f9	ØD1	TOL Js11	SL	L1 +0.25-0	PART No.
60	-0.030 -0.104	76	+0.10 -0.10	12.0	13.0	4608000
60	-0.030 -0.104	80	+0.10 -0.10	12.0	13.0	4602300
63	-0.030 -0.104	73	+0.10 -0.10	6.0	7.0	4606200
63	-0.030 -0.104	73	+0.10 -0.10	11.8	13.0	4363300
63	-0.030 -0.104	78	+0.10 -0.10	8.4	9.5	4184301‡
65	-0.030 -0.104	75	+0.10 -0.10	6.0	7.0	4606300
65	-0.030 -0.104	80	+0.10 -0.10	8.4	9.5	4184401‡
65	-0.030 -0.104	85	+0.11 -0.11	12.0	13.0	4602400
70	-0.030 -0.104	80	+0.10 -0.10	6.0	7.0	4606400
70	-0.030 -0.104	80	+0.10 -0.10	11.8	13.0	4363400
70	-0.030 -0.104	85	+0.11 -0.11	8.4	9.5	4184501‡
70	-0.030 -0.104	90	+0.11 -0.11	12.0	13.0	4602500
70	-0.030 -0.104	92	+0.11 -0.11	12.0	13.0	4602600
71	-0.030 -0.104	80	+0.10 -0.10	6.0	7.0	4606500
75	-0.030 -0.104	85	+0.11 -0.11	6.0	7.0	4606600
75	-0.030 -0.104	85	+0.11 -0.11	11.8	13.0	4363500
75	-0.030 -0.104	95	+0.11 -0.11	12.0	13.0	4602700
75	-0.030 -0.104	100	+0.11 -0.11	22.0	24.0	4584700
80	-0.030 -0.104	90	+0.11 -0.11	6.0	7.0	4606700
80	-0.030 -0.104	90	+0.11 -0.11	8.0	8.7	4159001
80	-0.030 -0.104	90	+0.11 -0.11	11.8	13.0	4363600
80	-0.030 -0.104	95	+0.11 -0.11	8.4	9.5	4184601‡
80	-0.030 -0.104	100	+0.11 -0.11	12.0	13.0	4602800

Ød1	TOL f9	ØD1	TOL Js11	SL	L1 +0.25-0	PART No.
85	-0.036 -0.123	100	+0.11 -0.11	8.4	9.5	4184701‡
85	-0.036 -0.123	100	+0.11 -0.11	8.9	10.0	4606800
85	-0.036 -0.123	105	+0.11 -0.11	12.0	13.0	4602900
90	-0.036 -0.123	100	+0.11 -0.11	11.8	13.0	4363700
90	-0.036 -0.123	105	+0.11 -0.11	8.4	9.5	4184801‡
90	-0.036 -0.123	105	+0.11 -0.11	8.9	10.0	4606900
90	-0.036 -0.123	110	+0.11 -0.11	12.0	13.0	4603000
95	-0.036 -0.123	110	+0.11 -0.11	8.9	10.0	4607000
95	-0.036 -0.123	115	+0.11 -0.11	12.0	13.0	4603100
100	-0.036 -0.123	115	+0.11 -0.11	8.9	10.0	4607100
100	-0.036 -0.123	120	+0.11 -0.11	12.0	12.5	4184901‡
100	-0.036 -0.123	120	+0.11 -0.11	12.0	13.0	4603200
105	-0.036 -0.123	125	+0.13 -0.13	11.4	12.5	4185001‡
105	-0.036 -0.123	125	+0.13 -0.13	15.0	17.0	4603300
110	-0.036 -0.123	130	+0.13 -0.13	11.0	12.5	4185101‡
110	-0.036 -0.123	130	+0.13 -0.13	15.0	17.0	4603400
112	-0.036 -0.123	125	+0.13 -0.13	8.9	10.0	4607200
115	-0.036 -0.123	130	+0.13 -0.13	8.9	10.0	4621600
115	-0.036 -0.123	135	+0.13 -0.13	15.0	17.0	4608100
120	-0.036 -0.123	140	+0.13 -0.13	14.5	16.0	4319600
120	-0.036 -0.123	140	+0.13 -0.13	15.0	17.0	4603500
125	-0.043 -0.143	140	+0.13 -0.13	8.9	10.0	4607300
125	-0.043 -0.143	145	+0.13 -0.13	11.4	12.5	4185201‡

601

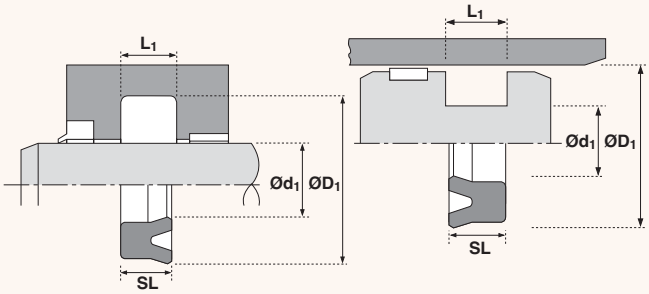

For piston sealing tolerances refer to technical details

Ød1	TOL f9	ØD1	TOL Js11	SL	L1 +0.25-0	PART No.
125	-0.043 -0.143	145	+0.13 -0.13	15.0	17.0	4603600
130	-0.043 -0.143	150	+0.13 -0.13	15.0	17.0	4603700
136	-0.043 -0.143	150	+0.13 -0.13	8.5	9.5	4607400
140	-0.043 -0.143	154	+0.13 -0.13	9.0	10.0	4607900
140	-0.043 -0.143	155	+0.13 -0.13	8.9	10.0	4607500
140	-0.043 -0.143	160	+0.13 -0.13	15.0	17.0	4603800
145	-0.043 -0.143	160	+0.13 -0.13	8.9	10.0	4607600
145	-0.043 -0.143	165	+0.13 -0.13	15.0	17.0	4608200
150	-0.043 -0.143	165	+0.13 -0.13	8.9	10.0	4607700
150	-0.043 -0.143	170	+0.13 -0.13	15.0	17.0	4603900
155	-0.043 -0.143	170	+0.13 -0.13	8.9	10.0	4621700
155	-0.043 -0.143	180	+0.13 -0.13	15.0	17.0	4608300
160	-0.043 -0.143	175	+0.13 -0.13	9.0	10.0	4608400
160	-0.043 -0.143	185	+0.15 -0.15	15.0	17.0	4608500
165	-0.043 -0.143	180	+0.13 -0.13	9.0	10.0	4608600
165	-0.043 -0.143	183	+0.15 -0.15	10.0	11.0	4607800
165	-0.043 -0.143	190	+0.15 -0.15	15.0	17.0	4608700
170	-0.043 -0.143	195	+0.15 -0.15	15.0	17.0	4608800
175	-0.043 -0.143	190	+0.15 -0.15	8.9	10.0	4621800
175	-0.043 -0.143	200	+0.15 -0.15	15.0	17.0	4608900
180	-0.043 -0.143	200	+0.15 -0.15	12.0	13.0	4609000

Ød1	TOL f9	ØD1	TOL Js11	SL	L1 +0.25-0	PART No.
180	-0.043 -0.143	205	+0.15 -0.15	15.0	17.0	4609100
190	-0.050 -0.165	210	+0.15 -0.15	12.0	13.0	4609200
190	-0.050 -0.165	215	+0.15 -0.15	15.0	17.0	4609300
200	-0.050 -0.165	220	+0.15 -0.15	12.0	13.0	4609400
200	-0.050 -0.165	225	+0.15 -0.15	15.0	17.0	4609500
210	-0.050 -0.165	235	+0.15 -0.15	18.0	20.0	4609600
220	-0.050 -0.165	240	+0.15 -0.15	12.0	13.0	4609700
220	-0.050 -0.165	250	+0.15 -0.15	17.0	19.2	4426600
230	-0.050 -0.165	250	+0.15 -0.15	12.0	13.0	4609800
240	-0.050 -0.165	260	+0.16 -0.16	12.0	13.0	4621000
240	-0.050 -0.165	265	+0.16 -0.16	18.0	20.0	4609900
250	-0.050 -0.165	275	+0.15 -0.15	18.0	20.0	4610000
260	-0.056 -0.186	290	+0.16 -0.16	18.0	20.0	4620100
265	-0.056 -0.186	295	+0.16 -0.16	18.0	20.0	4620200
270	-0.056 -0.186	300	+0.16 -0.16	18.0	20.0	4620300
280	-0.056 -0.186	310	+0.16 -0.16	18.0	20.0	4620400
290	-0.056 -0.186	320	+0.18 -0.18	18.0	20.0	4620500
300	-0.056 -0.186	330	+0.18 -0.18	18.0	20.0	4620600
375	-0.062 -0.202	405	+0.20 -0.20	22.0	24.0	4620700
400	-0.062 -0.202	425	+0.20 -0.20	25.0	27.0	4620800

Hallite
Fenner Advanced Sealing Technologies

OTP®

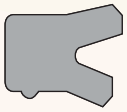

605

Technical details

	Metric	Inch
Operating conditions		
Maximum Speed	1.0 m/sec	3.0 ft/sec
Temperature Range	-45°C +110°C	-50°F +230°F
Maximum Pressure	400 bar*	6000 p.s.i.*

Maximum extrusion gap

Figures show the maximum permissible gap all on one side using minimum rod Ø and maximum clearance Ø. Refer to Housing Design section

Pressure bar	160	250	400
Maximum Gap mm	0.6	0.5	0.4
Pressure p.s.i.	2400	3750	6000
Maximum Gap in	0.024	0.020	0.016

Surface roughness	µmRa	µmRt	µinCLA	µinRMS
Dynamic Sealing Face Ød$_1$	0.1 <> 0.4	4 max	4 <> 16	5 <> 18
Static Sealing Face ØD$_1$	1.6 max	10 max	63 max	70 max
Static Housing Faces L$_1$	3.2 max	16 max	125 max	140 max

Chamfers & Radii						
Groove Section ≤ S mm	4.0	5.0	7.5	10.0	12.5	15.0
Min Chamfer C mm	3.0	3.5	5.0	6.5	7.0	8.0
Max Fillet Rad r$_1$ mm	0.2	0.4	0.8	0.8	1.2	1.6
Max Fillet Rad r$_2$ mm	0.4	0.8	1.2	1.2	1.6	2.4
Groove Section ≤ S in	0.125	0.187	0.250	0.312	0.375	0.500
Min Chamfer C in	0.093	0.093	0.125	0.156	0.187	0.217
Max Fillet Rad r$_1$ in	0.008	0.008	0.016	0.032	0.032	0.032
Max Fillet Rad r$_2$ in	0.016	0.016	0.032	0.047	0.047	0.047

Tolerances	Ød$_1$	ØD$_1$	L$_1$ mm	L$_1$ in
	f9	Js11	+0.25 -0	+0.010 -0

* Pressure rating of seal can be extended to 700 bar /10,000p.s.i. with the use of a back up ring.
If this option is required seek advice from your local Hallite Seals sales office.

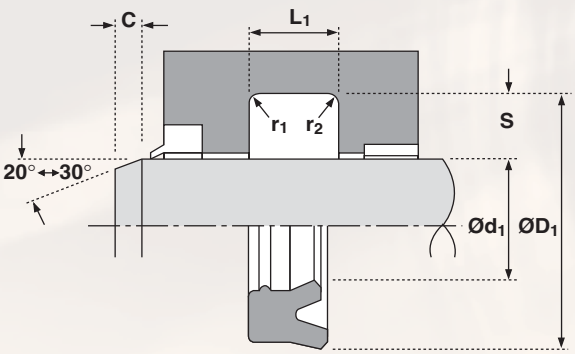

Design

The Hallite 605 is an asymmetric seal offering superlative dry rod sealing for light and medium duty applications.

The 605 has become an industry standard seal worldwide owing to its twin lip profile and consistent performance.

Manufactured in Hythane® – 181, the Hallite 605 is an extremely flexible seal making installation very easy.

The ranges cover most standard housings used in Europe, North America and Asia.

Features

- **Twin lip design offering: lower friction, improved sealing, primary lip protection, increased seal stability.**
- **Easy installation**

NB: Part numbers commencing 46 . . . . . or suffixed by "†" are designed to suit popular Asian housings.

Part numbers suffixed by "‡" indicate housing sizes to meet ISO5597.

605

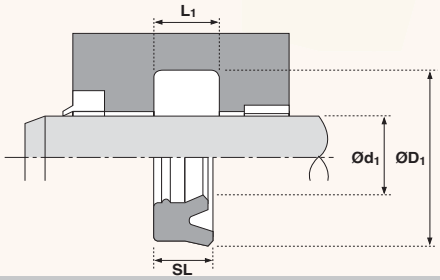

Ød1	TOL f9	ØD1	TOL Js11	SL	L1 +0.25 -0	PART No.
6	-0.010 -0.040	15	+0.06 -0.06	7.3	8.0	4790600
6	-0.010 -0.040	16	+0.06 -0.06	7.0	8.0	4580600
8	-0.013 -0.049	18	+0.06 -0.06	7.0	8.0	4580500
10	-0.013 -0.049	15	+0.06 -0.06	3.6	4.0	4402300
12	-0.016 -0.059	18	+0.06 -0.06	4.0	4.5	4578000
12	-0.016 -0.059	18	+0.06 -0.06	5.7	6.3	4314900
12	-0.016 -0.059	19	+0.07 -0.07	4.5	5.0	4341600
12	-0.016 -0.059	19	+0.07 -0.07	5.1	5.6	4710000‡
12	-0.016 -0.059	20	+0.07 -0.07	5.7	6.3	4310900‡
12	-0.016 -0.059	22	+0.07 -0.07	7.7	9.0	4315000
12.7	-0.016 -0.059	18	+0.06 -0.06	5.5	6.0	4370400
13	-0.016 -0.059	20	+0.07 -0.07	4.5	5.0	4351600
14	-0.016 -0.059	21	+0.07 -0.07	5.1	5.6	4710100‡
14	-0.016 -0.059	22	+0.07 -0.07	5.7	6.3	4311000‡
14	-0.016 -0.059	24	+0.07 -0.07	7.3	8.0	4310000‡
15	-0.016 -0.059	22	+0.07 -0.07	5.7	6.3	4762200
15.37	-0.016 -0.059	25.5	+0.07 -0.07	6.35	7.4	4333800
16	-0.016 -0.059	22	+0.07 -0.07	4.5	5.0	4341700
16	-0.016 -0.059	22	+0.07 -0.07	5.0	6.0	4314100
16	-0.016 -0.059	24	+0.07 -0.07	5.8	6.3	4295200‡
16	-0.016 -0.059	26	+0.07 -0.07	7.7	9.0	4311100
18	-0.016 -0.059	24	+0.07 -0.07	4.5	5.0	4712000
18	-0.016 -0.059	25	+0.07 -0.07	5.0	6.0	4314200

Ød1	TOL f9	ØD1	TOL Js11	SL	L1 +0.25 -0	PART No.
18	-0.016 -0.059	26	+0.07 -0.07	5.0	5.7	4611000
18	-0.016 -0.059	26	+0.07 -0.07	5.7	6.3	4311200‡
18	-0.016 -0.059	26	+0.07 -0.07	6.0	7.0	4333900
18	-0.016 -0.059	28	+0.07 -0.07	7.7	9.0	4305100
20	-0.020 -0.072	25	+0.07 -0.07	3.2	3.5	4332100
20	-0.020 -0.072	26	+0.07 -0.07	5.0	5.5	4315100
20	-0.020 -0.072	26	+0.07 -0.07	6.5	7.6	4826000
20	-0.020 -0.072	27	+0.07 -0.07	6.1	6.7	4702900
20	-0.020 -0.072	28	+0.07 -0.07	5.0	5.7	4611100
20	-0.020 -0.072	28	+0.07 -0.07	5.7	6.3	4362100‡
20	-0.020 -0.072	30	+0.07 -0.07	6.0	7.0	4611200
20	-0.020 -0.072	30	+0.07 -0.07	7.7	9.0	4305200
20	-0.020 -0.072	30	+0.07 -0.07	10.0	11.0	4310300
22	-0.020 -0.072	30	+0.07 -0.07	5	5.7	4617500
22	-0.020 -0.072	30	+0.07 -0.07	5.7	6.3	4305300‡
22	-0.020 -0.072	30	+0.07 -0.07	7.3	8.0	4356800
22	-0.020 -0.072	32	+0.08 -0.08	7.3	8.0	4310800‡
22	-0.020 -0.072	32	+0.08 -0.08	10.0	11.0	4311300
22.4	-0.020 -0.072	30	+0.08 -0.08	5.0	5.7	4611300
22.4	-0.020 -0.072	30	+0.08 -0.08	8.0	9.0	4616600
24	-0.020 -0.072	30	+0.08 -0.08	4.5	5.0	4773500
25	-0.020 -0.072	33	+0.08 -0.08	5.0	5.7	4610100
25	-0.020 -0.072	33	+0.08 -0.08	5.7	6.3	4305400‡

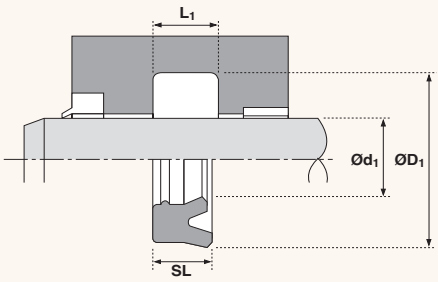

605

Ød1	TOL f9	ØD1	TOL Js11	SL	L1 +0.25 -0	PART No.
25	-0.020 -0.072	33	+0.08 -0.08	6.8	7.5	4333500
25	-0.020 -0.072	33	+0.08 -0.08	8.0	9.0	4807800
25	-0.020 -0.072	33	+0.08 -0.08	10.0	11.0	4315200
25	-0.020 -0.072	35	+0.08 -0.08	7.3	8.0	4512000‡
25	-0.020 -0.072	35	+0.08 -0.08	7.7	9.0	4311400
25	-0.020 -0.072	35	+0.08 -0.08	10.0	11.0	4310500
25	-0.020 -0.072	37	+0.08 -0.08	10.0	11.0	4379900
25	-0.020 -0.072	40	+0.08 -0.08	10.0	11.0	4322900
26	-0.020 -0.072	36	+0.08 -0.08	7.0	8.0	4459400
28	-0.020 -0.072	35.5	+0.08 -0.08	5.0	5.7	4611400
28	-0.020 -0.072	36	+0.08 -0.08	5.7	6.3	4703000‡
28	-0.020 -0.072	38	+0.08 -0.08	7.3	8.0	4305500‡
28	-0.020 -0.072	43	+0.08 -0.08	11.4	12.5	4399000‡
30	-0.020 -0.072	38	+0.08 -0.08	5.7	6.3	4704500
30	-0.020 -0.072	38	+0.08 -0.08	6.3	7.0	4402700
30	-0.020 -0.072	40	+0.08 -0.08	6.0	7.0	4610200
30	-0.020 -0.072	40	+0.08 -0.08	7.0	7.7	4703100
30	-0.020 -0.072	40	+0.08 -0.08	8.5	9.5	4826100
30	-0.020 -0.072	40	+0.08 -0.08	10.0	11.0	4304600
30	-0.020 -0.072	42	+0.08 -0.08	10.9	12.0	4383100
30	-0.020 -0.072	45	+0.08 -0.08	9.0	10.0	4618900
30	-0.020 -0.072	50	+0.08 -0.08	10.0	11.0	4328500
32	-0.025 -0.087	40	+0.08 -0.08	6.0	7.0	4310700

Ød1	TOL f9	ØD1	TOL Js11	SL	L1 +0.25 -0	PART No.
32	-0.025 -0.087	40	+0.08 -0.08	6.7	7.7	4334000
32	-0.025 -0.087	40	+0.08 -0.08	7.7	9.0	4315300
32	-0.025 -0.087	41.5	+0.08 -0.08	7.9	8.9	4334100
32	-0.025 -0.087	42	+0.08 -0.08	5.7	6.3	4360100‡
32	-0.025 -0.087	42	+0.08 -0.08	6.0	7.0	4616100
32	-0.025 -0.087	42	+0.08 -0.08	7.3	8.0	4374200‡
32	-0.025 -0.087	42	+0.08 -0.08	10.0	11.0	4305600
32	-0.025 -0.087	45	+0.08 -0.08	10.0	11.0	4597700
32	-0.025 -0.087	47	+0.08 -0.08	9.1	10.0	4329600
32	-0.025 -0.087	47	+0.08 -0.08	10.0	11.0	4338900
32	-0.025 -0.087	48	+0.08 -0.08	10.0	11.0	4492500
35	-0.025 -0.087	43	+0.08 -0.08	5.7	6.3	4703200
35	-0.025 -0.087	43	+0.08 -0.08	6.3	7.0	4402800
35	-0.025 -0.087	43	+0.08 -0.08	8.2	9.0	4309000
35	-0.025 -0.087	45	+0.08 -0.08	6.0	7.0	4611500
35	-0.025 -0.087	45	+0.08 -0.08	7.0	8.0	4619200
35	-0.025 -0.087	45	+0.08 -0.08	7.7	9.0	4314300
35	-0.025 -0.087	45	+0.08 -0.08	10.0	11.0	4305700
35	-0.025 -0.087	50	+0.08 -0.08	9.0	10.0	4611600
35	-0.025 -0.087	50	+0.08 -0.08	10.0	11.0	4322500
35.5	-0.025 -0.087	45	+0.08 -0.08	6.0	7.0	4616700
35.5	-0.025 -0.087	50.5	+0.08 -0.08	10.0	11.0	4616900
36	-0.025 -0.087	44	+0.08 -0.08	6.4	7.5	4373900

605

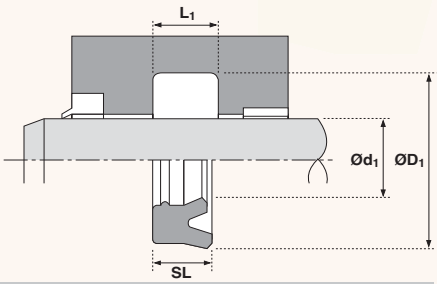

Ød1	TOL f9	ØD1	TOL Js11	SL	L1 +0.25 -0	PART No.
36	-0.025 -0.087	44	+0.08 -0.08	8.2	9.0	4395000
36	-0.025 -0.087	46	+0.08 -0.08	5.7	6.3	4372100‡
36	-0.025 -0.087	46	+0.08 -0.08	7.3	8.0	4304900‡
36	-0.025 -0.087	46	+0.08 -0.08	10.0	11.0	4305000
36	-0.025 -0.087	51	+0.08 -0.08	10.0	11.0	4771600
38	-0.025 -0.087	48	+0.08 -0.08	8.0	9.0	4619100
38	-0.025 -0.087	48	+0.08 -0.08	10.0	11.0	4515500
38	-0.025 -0.087	50	+0.08 -0.08	10.0	11.0	4586300
38	-0.025 -0.087	53	+0.08 -0.08	10.0	11.0	4480900
40	-0.025 -0.087	48	+0.08 -0.08	5.7	6.3	4703300
40	-0.025 -0.087	48	+0.080 -0.080	8.2	9.0	4396800
40	-0.025 -0.087	49.52	+0.080 -0.080	9.5	10.5	4334200
40	-0.025 -0.087	50	+0.080 -0.080	6.0	7.0	4610300
40	-0.025 -0.087	50	+0.080 -0.080	7.3	8.0	4311600‡
40	-0.025 -0.087	50	+0.080 -0.080	10.0	11.0	4293800
40	-0.025 -0.087	52	+0.095 -0.095	10.9	12.0	4381800
40	-0.025 -0.087	55	+0.095 -0.095	7.3	8.0	4703400
40	-0.025 -0.087	55	+0.095 -0.095	9.0	10.0	4611700
40	-0.025 -0.087	55	+0.095 -0.095	10.0	11.0	4328300
42	-0.025 -0.087	50	+0.080 -0.080	7.5	8.0	4373800
42	-0.025 -0.087	50	+0.080 -0.080	5.7	6.3	4744400
42	-0.025 -0.087	52	+0.095 -0.095	6.0	7.0	4618100
42	-0.025 -0.087	52	+0.095 -0.095	10.0	11.0	4338200

Ød1	TOL f9	ØD1	TOL Js11	SL	L1 +0.25 -0	PART No.
45	-0.025 -0.087	53	+0.095 -0.095	8.1	9.0	4402900
45	-0.025 -0.087	53	+0.095 -0.095	11.8	13.0	4315600
45	-0.025 -0.087	55	+0.095 -0.095	5.6	6.3	4479700‡
45	-0.025 -0.087	55	+0.095 -0.095	6.0	7.0	4610400
45	-0.025 -0.087	55	+0.095 -0.095	7.3	8.0	4305900‡
45	-0.025 -0.087	55	+0.095 -0.095	10.0	11.0	4302600
45	-0.025 -0.087	57.7	+0.095 -0.095	9.5	10.5	4322800
45	-0.025 -0.087	60	+0.095 -0.095	10.0	11.0	4315400
45	-0.025 -0.087	65	+0.095 -0.095	10.0	11.0	4315500
47	-0.025 -0.087	56.33	+0.095 -0.095	9	10	4778000
48	-0.025 -0.087	60	+0.095 -0.095	10.0	11.0	4432600
50	-0.025 -0.087	57	+0.095 -0.095	9.0	10.0	4538600
50	-0.025 -0.087	60	+0.095 -0.095	6.0	7.0	4611800
50	-0.025 -0.087	60	+0.095 -0.095	7.3	8.0	4306000‡
50	-0.025 -0.087	60	+0.095 -0.095	10.0	11.0	4304500
50	-0.025 -0.087	60	+0.095 -0.095	11.8	13.0	4314400
50	-0.025 -0.087	62.7	+0.095 -0.095	9.5	10.5	4334400
50	-0.025 -0.087	63	+0.095 -0.095	10.0	11.0	4804400
50	-0.025 -0.087	65	+0.095 -0.095	9.0	10.0	4611900
50	-0.025 -0.087	65	+0.095 -0.095	9.5	10.5	4344000
50	-0.025 -0.087	65	+0.095 -0.095	10.0	11.0	4617000
50	-0.025 -0.087	65	+0.095 -0.095	10.9	12.0	4291700
50	-0.025 -0.087	65	+0.095 -0.095	14.5	16.0	4381900

Hallite
Fenner Advanced Sealing Technologies

OTP®

605

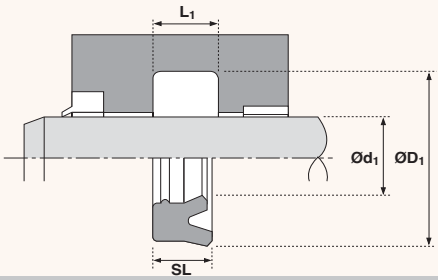

Ød1	TOL f9	ØD1	TOL Js11	SL	L1 +0.25 -0	PART No.
50	-0.025 -0.087	70	+0.095 -0.095	12.0	13.0	4612000
53	-0.030 -0.104	63	+0.095 -0.095	6.0	7.0	4617700
53	-0.030 -0.104	65	+0.095 -0.095	9.0	10.0	4371700
55	-0.030 -0.104	65	+0.095 -0.095	6.0	7.0	4615600
55	-0.030 -0.104	65	+0.095 -0.095	7.3	8.0	4703500
55	-0.030 -0.104	65	+0.095 -0.095	8.2	9.0	4360400
55	-0.030 -0.104	65	+0.095 -0.095	10.0	11.0	4306100
55	-0.030 -0.104	65	+0.095 -0.095	11.8	13.0	4323400
55	-0.030 -0.104	68	+0.095 -0.095	10.0	11.0	4593800
55	-0.030 -0.104	70	+0.095 -0.095	9.0	10.0	4612100
55	-0.030 -0.104	70	+0.095 -0.095	11.8	13.0	4319200
55	-0.030 -0.104	75	+0.095 -0.095	12.0	13.0	4612200
56	-0.030 -0.104	66	+0.095 -0.095	10.0	11.0	4311800
56	-0.030 -0.104	71	+0.095 -0.095	10.0	11.0	4311900
56	-0.030 -0.104	71	+0.095 -0.095	11.4	12.5	4306200‡
60	-0.030 -0.104	68	+0.095 -0.095	11.4	12.5	4538000
60	-0.030 -0.104	70	+0.095 -0.095	6.0	7.0	4610500
60	-0.030 -0.104	70	+0.095 -0.095	7.3	8.0	4703600
60	-0.030 -0.104	70	+0.095 -0.095	10.0	11.0	4310600
60	-0.030 -0.104	70	+0.095 -0.095	11.8	13.0	4306300
60	-0.030 -0.104	71	+0.095 -0.095	7.0	8.0	4615700
60	-0.030 -0.104	72	+0.095 -0.095	10.0	11.0	4323500
60	-0.030 -0.104	73	+0.095 -0.095	10.0	11.0	4593900

Ød1	TOL f9	ØD1	TOL Js11	SL	L1 +0.25 -0	PART No.
60	-0.030 -0.104	75	+0.095 -0.095	9.0	10.0	4612300
60	-0.030 -0.104	75	+0.095 -0.095	10.0	11.0	4378700
60	-0.030 -0.104	75	+0.095 -0.095	11.8	13.0	4306400
60	-0.030 -0.104	75	+0.095 -0.095	20.5	22.5	4391800
60	-0.030 -0.104	80	+0.095 -0.095	11.4	12.5	4514300
60	-0.030 -0.104	80	+0.095 -0.095	12.0	13.0	4612400
63	-0.030 -0.104	73	+0.095 -0.095	6.0	7.0	4612500
63	-0.030 -0.104	73	+0.095 -0.095	11.8	13.0	4312000
63	-0.030 -0.104	78	+0.095 -0.095	10.0	11.0	4312100
63	-0.030 -0.104	78	+0.095 -0.095	11.4	12.5	4306500‡
65	-0.030 -0.104	75	+0.095 -0.095	6.0	7.0	4615900
65	-0.030 -0.104	75	+0.095 -0.095	7.7	9.0	4314500
65	-0.030 -0.104	75	+0.095 -0.095	11.8	13.0	4306600
65	-0.030 -0.104	77	+0.095 -0.095	9.0	10.0	4703700
65	-0.030 -0.104	77.7	+0.095 -0.095	9.5	10.5	4334500
65	-0.030 -0.104	78	+0.095 -0.095	10.0	11.0	4616200
65	-0.030 -0.104	80	+0.095 -0.095	9.0	10.0	4612600
65	-0.030 -0.104	80	+0.095 -0.095	11.8	13.0	4312200
65	-0.030 -0.104	85	+0.110 -0.110	12.0	13.0	4612700
67	-0.030 -0.104	77	+0.095 -0.095	6.0	7.0	4612800
70	-0.030 -0.104	80	+0.095 -0.095	6.0	7.0	4615800
70	-0.030 -0.104	80	+0.095 -0.095	11.8	13.0	4312300
70	-0.030 -0.104	82	+0.110 -0.110	8.7	9.6	4494700

605

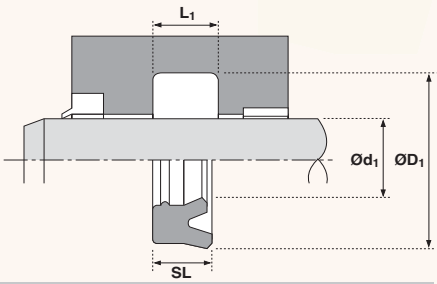

Ød1	TOL f9	ØD1	TOL Js11	SL	L1 +0.25 -0	PART No.
70	-0.030 -0.104	82	+0.110 -0.110	10.0	11.0	4323600
70	-0.030 -0.104	83	+0.110 -0.110	10.0	11.0	4616400
70	-0.030 -0.104	85	+0.110 -0.110	9.0	10.0	4612900
70	-0.030 -0.104	85	+0.110 -0.110	10.0	11.0	4302700
70	-0.030 -0.104	85	+0.110 -0.110	11.4	12.5	4301200‡
70	-0.030 -0.104	85	+0.110 -0.110	20.5	22.5	4401400
70	-0.030 -0.104	90	+0.110 -0.110	12.0	13.0	4613000
75	-0.030 -0.104	83	+0.110 -0.110	11.4	12.5	4706300
75	-0.030 -0.104	85	+0.110 -0.110	6.0	7.0	4616800
75	-0.030 -0.104	85	+0.110 -0.110	11.8	13	4312400
75	-0.030 -0.104	88	+0.110 -0.110	10.0	11.0	4616300
75	-0.030 -0.104	90	+0.110 -0.110	9.0	10.0	4613100
75	-0.030 -0.104	95	+0.110 -0.110	12.0	13.0	4613200
78	-0.030 -0.104	86	+0.110 -0.110	9.0	10.0	4538700
80	-0.030 -0.104	88	+0.110 -0.110	10.9	12.0	4766600
80	-0.030 -0.104	90	+0.110 -0.110	6.0	7.0	4616000
80	-0.030 -0.104	90	+0.110 -0.110	10.0	11.0	4390400
80	-0.030 -0.104	90	+0.110 -0.110	11.8	13.0	4312500
80	-0.030 -0.104	92	+0.110 -0.110	8.7	9.6	4494800
80	-0.030 -0.104	93	+0.110 -0.110	10.0	11.0	4615200
80	-0.030 -0.104	95	+0.110 -0.110	9.0	10.0	4613300
80	-0.030 -0.104	95	+0.110 -0.110	10.0	11.0	4383500
80	-0.030 -0.104	95	+0.110 -0.110	11.8	13.0	4306700

Ød1	TOL f9	ØD1	TOL Js11	SL	L1 +0.25 -0	PART No.
80	-0.030 -0.104	100	+0.110 -0.110	12.0	13.0	4613400
80	-0.030 -0.104	100	+0.110 -0.110	14.5	16.0	4382800‡
80	-0.030 -0.104	110	+0.110 -0.110	16.4	18.0	4342900
85	-0.036 -0.123	93	+0.110 -0.110	10.0	11.0	4392700
85	-0.036 -0.123	93	+0.110 -0.110	11.4	12.5	4537900
85	-0.036 -0.123	100	+0.110 -0.110	9.0	10.0	4610600
85	-0.036 -0.123	100	+0.110 -0.110	10.0	11.0	4615300
85	-0.036 -0.123	100	+0.110 -0.110	11.8	13.0	4306800
85	-0.036 -0.123	105	+0.110 -0.110	12.0	13.0	4613500
90	-0.036 -0.123	98	+0.110 -0.110	11.4	12.5	4706400
90	-0.036 -0.123	100	+0.110 -0.110	6.8	7.5	4493500‡
90	-0.036 -0.123	100	+0.110 -0.110	9.0	10.0	4366900
90	-0.036 -0.123	100	+0.110 -0.110	11.8	13.0	4314600
90	-0.036 -0.123	102	+0.110 -0.110	8.7	9.6	4333000
90	-0.036 -0.123	105	+0.110 -0.110	9.0	10.0	4613600
90	-0.036 -0.123	105	+0.110 -0.110	10.0	11.0	4615400
90	-0.036 -0.123	105	+0.110 -0.110	11.4	12.5	4306900‡
90	-0.036 -0.123	110	+0.110 -0.110	12.0	13.0	4613700
95	-0.036 -0.123	110	+0.110 -0.110	9.0	10.0	4610700
95	-0.036 -0.123	110	+0.110 -0.110	10.0	11.0	4615500
95	-0.036 -0.123	110	+0.110 -0.110	11.8	13.0	4617600
95	-0.036 -0.123	115	+0.110 -0.110	12.0	13.0	4613800
96	-0.036 -0.123	104	+0.110 -0.110	10.9	12.0	4380300

Hallite
Fenner Advanced Sealing Technologies

OTP®

605

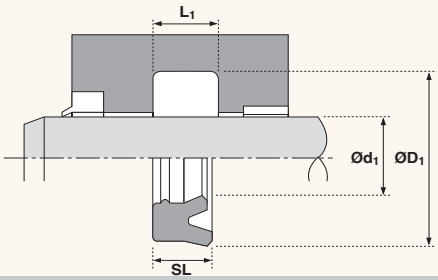

Ød1	TOL f9	ØD1	TOL Js11	SL	L1 +0.25 -0	PART No.
98	-0.036 -0.123	112	+0.110 -0.110	8.5	9.5	4618200
100	-0.036 -0.123	108	+0.110 -0.110	10.9	12.0	4766700
100	-0.036 -0.123	110	+0.110 -0.110	10.9	12.0	4461700
100	-0.036 -0.123	115	+0.110 -0.110	9.0	10.0	4610800
100	-0.036 -0.123	115	+0.110 -0.110	11.8	13.0	4312600
100	-0.036 -0.123	115	+0.110 -0.110	10.0	11.0	4617100
100	-0.036 -0.123	120	+0.110 -0.110	11.8	13.0	4312700†
100	-0.036 -0.123	120	+0.110 -0.110	14.5	16.0	4307000‡
105	-0.036 -0.123	113	+0.110 -0.110	10.0	11.0	4392800
105	-0.036 -0.123	115	+0.110 -0.110	13.2	14.5	4390500
105	-0.036 -0.123	120	+0.110 -0.110	9.0	10	4617300
105	-0.036 -0.123	120	+0.110 -0.110	10.0	11.0	4617200
105	-0.036 -0.123	120	+0.110 -0.110	14.5	16.0	4379500
105	-0.036 -0.123	125	+0.125 -0.125	14.5	16.0	4617400
108	-0.036 -0.123	123	+0.125 -0.125	10.9	12.0	4329100
110	-0.036 -0.123	125	+0.125 -0.125	9.0	10.0	4459700†
110	-0.036 -0.123	125	+0.125 -0.125	11.0	12.0	4537800
110	-0.036 -0.123	125	+0.125 -0.125	14.5	16.0	4481600
110	-0.036 -0.123	130	+0.125 -0.125	11.8	13.0	4312800†
110	-0.036 -0.123	130	+0.125 -0.125	14.5	16.0	4307100‡
110	-0.036 -0.123	135	+0.125 -0.125	14.5	16.0	4343000
112	-0.036 -0.123	125	+0.125 -0.125	9.0	10.0	4610900
115	-0.036 -0.123	125	+0.125 -0.125	11.0	12.0	4619300

Ød1	TOL f9	ØD1	TOL Js11	SL	L1 +0.25 -0	PART No.
115	-0.036 -0.123	130	+0.125 -0.125	9.0	10.0	4459800
115	-0.036 -0.123	130	+0.125 -0.125	10.9	12.0	4434600
115	-0.036 -0.123	130	+0.125 -0.125	14.5	16.0	4342600
120	-0.036 -0.123	128	+0.125 -0.125	11.4	12.5	4706500
120	-0.036 -0.123	130	+0.125 -0.125	10.9	12.0	4461800
120	-0.036 -0.123	135	+0.125 -0.125	9.0	10.0	4614000
120	-0.036 -0.123	140	+0.125 -0.125	12.0	13.0	4614100
120	-0.036 -0.123	140	+0.125 -0.125	14.5	16.0	4312900
124	-0.043 -0.143	134	+0.125 -0.125	6.0	7.0	4618300
125	-0.043 -0.143	133	+0.125 -0.125	10.0	11.0	4392900
125	-0.043 -0.143	133	+0.125 -0.125	11.4	12.5	4748500
125	-0.043 -0.143	140	+0.125 -0.125	9.0	10.0	4614200
125	-0.043 -0.143	140	+0.125 -0.125	10.0	11.0	4618400
125	-0.043 -0.143	140	+0.125 -0.125	10.9	12.0	4766500
125	-0.043 -0.143	145	+0.125 -0.125	12.0	13.0	4614300
125	-0.043 -0.143	145	+0.125 -0.125	14.5	16.0	4307300‡
125	-0.043 -0.143	150	+0.125 -0.125	12.5	14.0	4367000
130	-0.043 -0.143	140	+0.125 -0.125	14.5	16.0	4390600
130	-0.043 -0.143	145	+0.125 -0.125	9.0	10.0	4614400
130	-0.043 -0.143	145	+0.125 -0.125	10.0	11.0	4619000
130	-0.043 -0.143	150	+0.125 -0.125	12.0	13.0	4614500
130	-0.043 -0.143	150	+0.125 -0.125	14.5	16.0	4313000
132.5	-0.043 -0.143	157.5	+0.125 -0.125	13.2	14.5	4329400

605

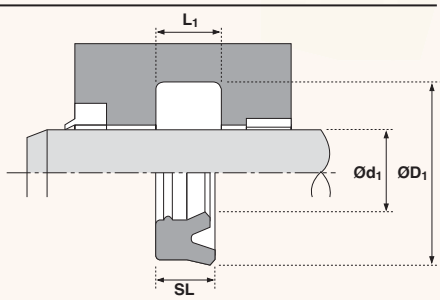

Ød1	TOL f9	ØD1	TOL Js11	SL	L1 +0.25 -0	PART No.
135	-0.043 -0.143	145	+0.125 -0.125	11.0	12.0	4619400
135	-0.043 -0.143	150	+0.125 -0.125	9.0	10.0	4618500
135	-0.043 -0.143	150	+0.125 -0.125	11.4	12.5	4537700
140	-0.043 -0.143	150	+0.125 -0.125	6.0	7.0	4617900
140	-0.043 -0.143	150	+0.125 -0.125	10.9	12.0	4461900
140	-0.043 -0.143	155	+0.125 -0.125	9.0	10.0	4614600
140	-0.043 -0.143	155	+0.125 -0.125	11.8	13.0	4555300
140	-0.043 -0.143	160	+0.125 -0.125	11.8	13.0	4313100†
140	-0.043 -0.143	160	+0.125 -0.125	14.5	16.0	4307400‡
150	-0.043 -0.143	160	+0.125 -0.125	11.0	12.0	4595200
150	-0.043 -0.143	165	+0.125 -0.125	9.0	10.0	4614700
150	-0.043 -0.143	170	+0.125 -0.125	12.0	13.0	4614800
150	-0.043 -0.143	170	+0.125 -0.125	13.2	14.5	4367100
150	-0.043 -0.143	170	+0.125 -0.125	14.5	16.0	4342800
151	-0.043 -0.143	159	+0.125 -0.125	9.0	10.0	4538800
155	-0.043 -0.143	165	+0.125 -0.125	6.0	7.0	4618600
155	-0.043 -0.143	165	+0.125 -0.125	11.0	12.0	4619500
155	-0.043 -0.143	170	+0.125 -0.125	9.0	10.0	4618700
155	-0.043 -0.143	170	+0.125 -0.125	14.5	16.0	4342700

Ød1	TOL f9	ØD1	TOL Js11	SL	L1 +0.25 -0	PART No.
160	-0.043 -0.143	175	+0.125 -0.125	9.0	10.0	4614900
160	-0.043 -0.143	175	+0.125 -0.125	10.9	12.0	4462000
160	-0.043 -0.143	180	+0.125 -0.125	12.0	13.0	4615000
160	-0.043 -0.143	180	+0.125 -0.125	14.5	16.0	4345000
165	-0.043 -0.143	180	+0.125 -0.125	9.0	10.0	4616500
170	-0.043 -0.143	180	+0.125 -0.125	6.0	7.0	4618800
170	-0.043 -0.143	185	+0.145 -0.145	9.0	10.0	4618000
170	-0.043 -0.143	190	+0.145 -0.145	14.5	16.0	4398800
180	-0.043 -0.143	190	+0.145 -0.145	11.0	12.0	4617800
180	-0.043 -0.143	192	+0.145 -0.145	12.5	14.0	4619600
180	-0.043 -0.143	200	+0.145 -0.145	11.8	13.0	4314700‡
180	-0.043 -0.143	200	+0.145 -0.145	14.5	16.0	4560900
185	-0.050 -0.165	200	+0.145 -0.145	10.9	12.0	4462100
190	-0.050 -0.165	215	+0.145 -0.145	18.5	20.0	4749400
200	-0.050 -0.165	220	+0.145 -0.145	12.0	13.0	4615100
200	-0.050 -0.165	220	+0.145 -0.145	14.5	16.0	4380200
205	-0.050 -0.143	220	+0.145 -0.125	12.2	13.5	4522400
220	-0.050 -0.165	240	+0.145 -0.145	14.5	16.0	4555400
330	-0.062 -0.202	350	+0.180 -0.180	18.0	20.0	4587400

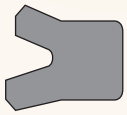

606

Technical details

	Metric	Inch
Operating conditions		
Maximum Speed	1.0 m/sec	3.0 ft/sec
Temperature Range	-45°C +110°C	-50°F +230°F
Maximum Pressure	400 bar*	6,000 p.s.i.*

Maximum extrusion gap

Figures show the maximum permissible gap all on one side using minimum rod Ø and maximum clearance Ø. Refer to Housing Design section.

Pressure bar	160	250	400
Maximum Gap mm	0.6	0.5	0.4
Pressure p.s.i.	2400	3750	6000
Maximum Gap in	0.024	0.020	0.016

Surface roughness	µmRa	µmRt	µinCLA	µinRMS
Dynamic Sealing Face ØD_1	0.1 <> 0.4	4 max	4 <> 16	5 <> 18
Static Sealing Face Ød_1	1.6 max	10 max	63 max	70 max
Static Housing Faces L_1	3.2 max	16 max	125 max	140 max

Chamfers & Radii						
Groove Section ≤ S mm	4.0	5.0	7.5	10.0		
Min Chamfer C mm	3.0	3.5	5.0	6.5		
Max Fillet Rad r_1 mm	0.2	0.4	0.8	0.8		
Groove Section ≤ S in	0.125	0.187	0.250	0.312	0.375	0.500
Min Chamfer C in	0.093	0.093	0.125	0.156	0.187	0.217
Max Fillet Rad r_1 in	0.008	0.008	0.016	0.032	0.032	0.032

Tolerances	ØD_1	Ød_1	L_1 mm	L_1 in
	H9	js11	+0.25 -0	+0.010 -0

* Pressure rating of seal can be extended to 700 bar /10,000p.s.i. with the use of a back up ring.
If this option is required seek advice from your local Hallite Seals sales office.

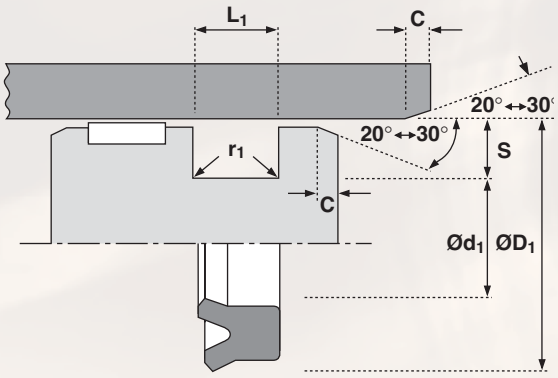

Design

The Hallite 606 is an asymmetric piston seal designed to offer effective bore sealing in a wide variety of applications.

The outer dynamic lip is shorter and more robust to provide improved sealing and compression set characteristics over conventional U rings.

The seal can be used by itself as a single acting seal or fitted back to back in separate grooves for double acting applications.

Manufactured in Hallite's high performance polyurethane Hythane® 181, The Hallite 606 provides the following benefits:

Features

- **Flexible for easy installation**
- **Excellent wear resistance**
- **High resistance to extrusion**
- **Robust design**
- **Wide temperature range**

NB: Part numbers suffixed by "‡" indicate housing sizes to meet ISO5597.

606

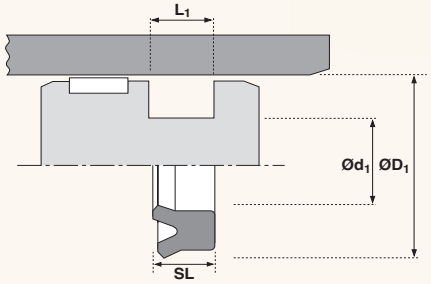

ØD1	TOL H9	Ød1	TOL js11	SL	L1 +0.25-0	PART No.
16	+0.05 +0.00	10	+0.06 -0.06	5.7	6.3	4830500
25	+0.05 +0.00	15	+0.06 -0.06	8.2	9.0	4390100
25	+0.05 +0.00	17	+0.06 -0.06	5.7	6.3	4418000‡
30	+0.05 +0.00	20	+0.07 -0.07	8.0	9.0	4354200
32	+0.06 +0.00	24	+0.07 -0.07	5.7	6.3	4351900‡
35	+0.06 +0.00	25	+0.07 -0.07	7.3	8.0	4365700
37	+0.06 +0.00	21	+0.07 -0.07	11.8	13.0	4354100
38	+0.06 +0.00	31	+0.08 -0.08	5.2	6.0	4728000
40	+0.06 +0.00	28	+0.07 -0.07	9.0	10.0	4826200
40	+0.06 +0.00	30	+0.07 -0.07	7.3	8.0	4299500‡
40	+0.06 +0.00	30	+0.07 -0.07	10.0	11.0	4400900
45	+0.06 +0.00	35	+0.08 -0.08	7.3	8.0	4315700
50	+0.06 +0.00	39	+0.08 -0.08	3.8	4.2	4460700
50	+0.06 +0.00	40	+0.08 -0.08	7.8	8.0	4319500‡
55	+0.07 +0.00	45	+0.08 -0.08	7.3	8.0	4380000
60	+0.07 +0.00	44.9	+0.08 -0.08	5.7	6.3	4739800
60	+0.07 +0.00	45	+0.08 -0.08	10.0	11.0	4407000
60	+0.07 +0.00	50	+0.08 -0.08	9.0	10.0	4762000
63	+0.07 +0.00	48	+0.08 -0.08	11.4	12.5	4383200
63	+0.07 +0.00	53	+0.10 -0.10	7.3	8.0	4341500‡
63	+0.07 +0.00	53	+0.10 -0.10	11.8	13.0	4318800
65	+0.07 +0.00	55	+0.10 -0.10	7.3	8.0	4424100
70	+0.07 +0.00	55	+0.10 -0.10	10.0	11.0	4448000
70	+0.07 +0.00	60	+0.10 -0.10	8.1	9.0	4709500
71	+0.07 +0.00	61	+0.10 -0.10	6.0	7.0	4492600
75	+0.07 +0.00	67	+0.10 -0.10	8.8	9.7	4322300
80	+0.07 +0.00	65	+0.10 -0.10	11.4	12.5	4363800‡
80	+0.07 +0.00	70	+0.10 -0.10	6.8	7.5	4370300
80	+0.07 +0.00	70	+0.10 -0.10	8.0	9.0	4709600
85	+0.09 +0.00	75	+0.10 -0.10	8.1	9.0	4709700
85.7	+0.09 +0.00	70.7	+0.10 -0.10	10.3	11.4	4493400
90.0	+0.09 +0.00	80.0	+0.10 -0.10	11.0	12.0	4798800
100	+0.09 +0.00	85	+0.11 -0.11	11.4	12.5	4363900‡
100	+0.09 +0.00	90	+0.11 -0.11	6.8	7.5	4375900
110	+0.09 +0.00	100	+0.11 -0.11	8.0	9.0	4533100
125	+0.10 +0.00	105	+0.11 -0.11	14.5	16.0	4364000‡
150	+0.10 +0.00	130	+0.13 -0.13	14.5	16.0	4390200
150	+0.10 +0.00	140	+0.13 -0.13	13.6	15.0	4390300
160	+0.10 +0.00	140	+0.13 -0.13	14.5	16.0	4642700
160	+0.10 +0.00	140	+0.13 -0.13	18.2	20.0	4364100
170	+0.10 +0.00	150	+0.13 -0.13	15.0	16.5	4642800
180	+0.10 +0.00	160	+0.13 -0.13	15.0	16.5	4643100
190	+0.10 +0.00	170	+0.13 -0.13	15.0	16.5	4642900
200	+0.12 +0.00	180	+0.13 -0.13	14.5	16.0	4392300
280	+0.12 +0.00	260	+0.13 -0.13	15.5	17.0	4643000

Hallite
Fenner Advanced Sealing Technologies

OTP®

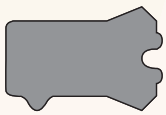

610

Technical details

	Metric		Inch	
Operating conditions				
Maximum Speed	1.0 m/sec		3.0 ft/sec	
Temperature Range	-45°C +110°C		-50°F +230°F	
Maximum Pressure	400 bar		6000 p.s.i.	
Maximum extrusion gap	**Figures show the maximum permissible gap all on one side using minimum rod Ø and maximum clearance Ø. Refer to Housing Design section**			
Pressure bar	160	250	400	
Maximum Gap mm	0.6	0.5	0.4	
Pressure p.s.i.	2400	3750	6000	
Surface roughness	µmRa	µmRt	µinCLA	µinRMS
Dynamic Sealing Face Ød$_1$	0.1 <> 0.4	4 max	4 <> 16	5 <> 18
Static Sealing Face ØD$_1$	1.6 max	10 max	63 max	70 max
Static Housing Faces L$_1$	3.2 max	16 max	125 max	140 max
Chamfers & Radii				
Groove Section≤ S mm	4.0	5.0	7.5	
Min Chamfer C mm	3.0	3.5	5.0	
Max Fillet Rad r$_1$ mm	0.2	0.4	0.8	
Max Fillet Rad r$_2$ mm	0.4	0.8	1.2	
Tolerances	Ød$_1$	ØD$_1$	L$_1$ mm	
	f9	Js11	+0.25 -0	

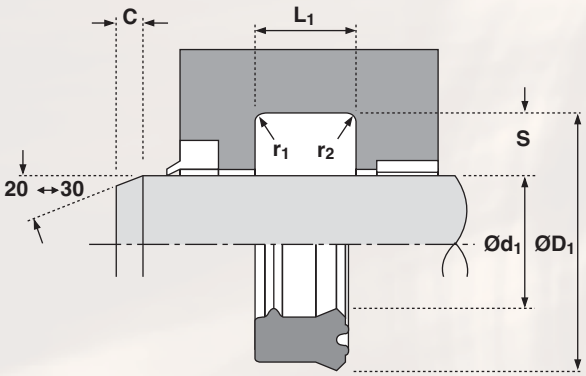

Design

The Hallite 610 is an asymmetric "solid" seal offering excellent dry rod sealing for light and medium duty applications.

It is designed to be less sensitive to pressure fluctuations than Hallite 605 'U' ring design.

Manufactured in Hallite's high performance polyurethane – Hythane® ~ 181 – the type 610 is an extremely flexible seal making installation very easy.

Features

- **Insensitive to pressure fluctuation.**
- **Twin lip design offering: lower friction, improved sealing, primary lip protection, increased seal stability.**

NB: Part numbers suffixed by "‡" indicate housing sizes to meet ISO5597.

610

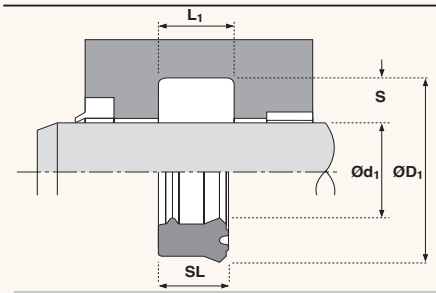

Ød1	TOL f9	ØD1	TOL Js11	SL	L1 +0.25-0	PART No.
8	-0.013 -0.049	16	+0.06 -0.06	5.3	6.0	4581000*
14	-0.016 -0.059	22	+0.07 -0.07	5.3	6.0	4580900
18	-0.016 -0.059	25	+0.07 -0.07	4.6	5.6	4334600‡
20	-0.020 -0.072	26	+0.07 -0.07	4.5	5.5	4319400
20	-0.020 -0.072	28	+0.07 -0.07	6.0	7.0	4307500
22	-0.020 -0.072	28	+0.07 -0.07	4.5	5.5	4356000
22	-0.020 -0.072	29	+0.07 -0.07	4.6	5.6	4324200‡
22	-0.020 -0.072	30	+0.07 -0.07	6.0	7.0	4316100
25	-0.020 -0.072	33	+0.08 -0.08	6.0	7.0	4316200
25	-0.020 -0.072	33	+0.08 -0.08	8.0	9.0	4299000
28	-0.020 -0.072	36	+0.08 -0.08	5.3	6.3	4334700‡
28	-0.020 -0.072	36	+0.08 -0.08	6.0	7.0	4323200
28	-0.020 -0.072	36	+0.08 -0.08	8.0	9.0	4307700
30	-0.020 -0.072	38	+0.08 -0.08	6.0	7.0	4308900
30	-0.020 -0.072	38	+0.08 -0.08	8.0	9.0	4362400
30	-0.020 -0.072	40	+0.08 -0.08	7.0	8.0	4558300
32	-0.025 -0.087	40	+0.08 -0.08	6.0	7.0	4316300
35	-0.025 -0.087	43	+0.08 -0.08	6.0	7.0	4301700
35	-0.025 -0.087	43	+0.08 -0.08	8.0	9.0	4592800
35	-0.025 -0.087	45	+0.08 -0.08	10.0	11.0	4299300
36	-0.025 -0.087	44	+0.08 -0.08	5.3	6.3	4324300‡
36	-0.025 -0.087	44	+0.08 -0.08	8.0	9.0	4308000
36	-0.025 -0.087	46	+0.08 -0.08	10.0	11.0	4299400

Ød1	TOL f9	ØD1	TOL Js11	SL	L1 +0.25-0	PART No.
40	-0.025 -0.087	48	+0.08 -0.08	5.4	6.4	4329200
40	-0.025 -0.087	48	+0.08 -0.08	6.5	7.5	4323300
40	-0.025 -0.087	48	+0.08 -0.08	8.0	9.0	4301800
45	-0.025 -0.087	52	+0.10 -0.10	10.0	11.0	4330000
45	-0.025 -0.087	53	+0.10 -0.10	5.3	6.3	4334800‡
45	-0.025 -0.087	53	+0.10 -0.10	6.0	7.0	4711000
45	-0.025 -0.087	53	+0.10 -0.10	8.0	9.0	4308100
45	-0.025 -0.087	55	+0.10 -0.10	10.0	11.0	4389400
50	-0.025 -0.087	58	+0.10 -0.10	5.3	6.3	4356900
50	-0.025 -0.087	58	+0.10 -0.10	8.0	9.0	4299100
50	-0.025 -0.087	60	+0.10 -0.10	10.0	11.0	4389500
55	0.030 -0.104	63	+0.10 -0.10	8.0	9.0	4323000
55	-0.030 -0.104	65	+0.10 -0.10	7.0	8.0	4385500
55	-0.030 -0.104	65	+0.10 -0.10	10.0	11.0	4389600
55	-0.030 -0.104	65	+0.10 -0.10	11.8	13.0	4389700
56	-0.030 -0.104	64	+0.10 -0.10	8.0	9.0	4316400
56	-0.030 -0.104	66	+0.10 -0.10	6.8	7.5	4334900‡
60	-0.030 -0.104	68	+0.10 -0.10	7.0	8.0	4732400
60	-0.030 -0.104	68	+0.10 -0.10	8.0	9.0	4299200
60	-0.030 -0.104	68	+0.10 -0.10	11.4	12.5	4329900
60	-0.030 -0.104	70	+0.10 -0.10	7.0	8.0	4303200
60	-0.030 -0.104	70	+0.10 -0.10	11.8	13.0	4389800
63	-0.030 -0.104	71	+0.10 -0.10	8.0	9.0	4316500

610

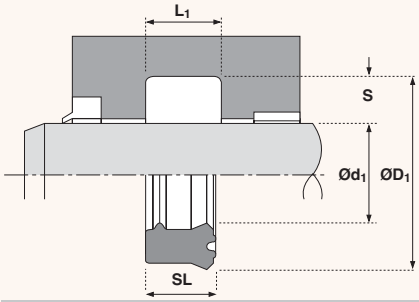

Ød1	TOL f9	ØD1	TOL Js11	SL	L1 +0.25-0	PART No.
63	-0.030 -0.104	75	+0.10 -0.10	8.6	9.6	4360500
65	-0.030 -0.104	73	+0.10 -0.10	8.0	9.0	4362500
65	-0.030 -0.104	75	+0.10 -0.10	11.8	13.0	4389900
70	-0.030 -0.104	78	+0.10 -0.10	8.0	9.0	4316600
70	-0.030 -0.104	80	+0.10 -0.10	6.5	7.5	4335000‡
70	-0.030 -0.104	80	+0.10 -0.10	11.8	13.0	4390000
75	-0.030 -0.104	83	+0.10 -0.10	8.0	9.0	4539400

Ød1	TOL f9	ØD1	TOL Js11	SL	L1 +0.25-0	PART No.
80	-0.030 -0.104	88	+0.11 -0.10	8.0	9.0	4316700
85	-0.036 -0.123	97	+0.11 -0.11	9.0	10.0	4328100
87	-0.036 -0.123	95	+0.11 -0.11	8.0	9.0	4323700
90	-0.036 -0.123	98	+0.11 -0.11	8.0	9.0	4316800
100	-0.036 -0.123	108	+0.11 -0.11	8.0	9.0	4316900
134	-0.043 -0.143	147	+0.13 -0.13	12.0	13.3	4588100

* Split housing required

616

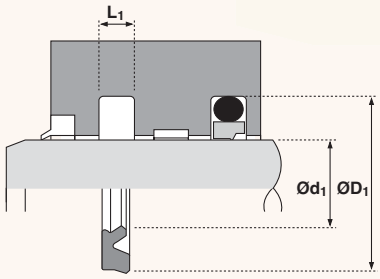

Ød1	TOL f9	ØD1	TOL H11	SL	L1 +0.25 -0	PART No.
14	-0.016 -0.059	21.5	+0.13 +0.00	2.8	3.2	4577700‡
18	-0.016 -0.059	25.5	+0.13 +0.00	2.8	3.2	4341800‡
20	-0.020 -0.072	27.5	+0.13 +0.00	2.8	3.2	4721700‡
20	-0.020 -0.072	31.0	+0.16 +0.00	3.9	4.2	4367400‡
22	-0.020 -0.072	33.0	+0.16 +0.00	3.9	4.2	4341900‡
25	-0.020 -0.072	32.5	+0.16 +0.00	2.8	3.2	4721800‡
25	-0.020 -0.072	36.0	+0.16 +0.00	3.9	4.2	4367500
25.4	-0.020 -0.072	32.9	+0.16 +0.00	2.8	3.2	4469000
28	-0.020 -0.072	39.0	+0.16 +0.00	3.9	4.2	4367600‡
30	-0.020 -0.072	41.0	+0.16 +0.00	3.9	4.2	4404500
32	-0.025 -0.087	39.5	+0.16 +0.00	2.8	3.2	4714800
32	-0.025 -0.087	43.0	+0.16 +0.00	3.9	4.2	4367700‡
36	-0.025 -0.087	47.0	+0.16 +0.00	3.9	4.2	4353100‡
40	-0.025 -0.087	51.0	+0.19 +0.00	3.9	4.2	4722900‡
40	-0.025 -0.087	55.5	+0.19 +0.00	6.0	6.3	4367800‡
45	-0.025 -0.087	56.0	+0.19 +0.00	3.9	4.2	4556300‡
45	-0.025 -0.087	60.5	+0.19 +0.00	6.0	6.3	4367900
50	-0.025 -0.087	61.0	+0.19 +0.00	3.9	4.2	4723000‡

Ød1	TOL f9	ØD1	TOL H11	SL	L1 +0.25 -0	PART No.
50	-0.025 -0.087	65.5	+0.19 +0.00	6.0	6.3	4368000
56	-0.030 -0.104	71.5	+0.19 +0.00	6.0	6.3	4368100‡
60	-0.030 -0.104	70.6	+0.19 +0.00	3.9	4.2	4410800
60	-0.030 -0.104	75.5	+0.19 +0.00	6.0	6.3	4727100
63	-0.030 -0.104	78.5	+0.19 +0.00	6.0	6.3	4368200‡
65	-0.030 -0.104	80.5	+0.22 +0.00	6.0	6.3	4548000
70	-0.030 -0.104	85.5	+0.22 +0.00	6.0	6.3	4368300‡
75	-0.030 -0.104	90.5	+0.22 +0.00	6.0	6.3	4728200‡
80	-0.030 -0.104	95.5	+0.22 +0.00	6.0	6.3	4368400‡
85	-0.036 -0.123	100.5	+0.22 +0.00	6.0	6.3	4538400
90	-0.036 -0.123	105.5	+0.22 +0.00	6.0	6.3	4368500‡
95	-0.036 -0.123	110.5	+0.22 +0.00	6.0	6.3	4538500
100	-0.036 -0.123	115.5	+0.22 +0.00	6.0	6.3	4368600‡
110	-0.036 -0.123	125.5	+0.25 +0.00	6.0	6.3	4545400‡
125	-0.043 -0.143	140.5	+0.25 +0.00	6.0	6.3	4545500‡
130	-0.043 -0.143	145.5	+0.25 +0.00	6.0	6.3	4793900
140	-0.043 -0.143	155.5	+0.25 +0.00	6.0	6.3	4545600‡
160	-0.043 -0.143	175.5	+0.25 +0.00	6.0	6.3	4548100‡

616

Technical details

	Metric		Inch	
Operating conditions				
Maximum Speed	1.0 m/sec		3.0 ft/sec	
Temperature Range	-45°C +110°C		-50°F +230°F	
Maximum Pressure	240 bar		3500 p.s.i.	
Maximum extrusion gap	**Figures show the maximum permissible gap all on one side using minimum rod Ø and maximum clearance Ø. Refer to Housing Design section**			
Pressure bar	160	240		
Maximum Gap mm	0.6	0.5		
Pressure p.s.i.	2400	3500		
Surface roughness	µmRa	µmRt	µinCLA	µinRMS
Dynamic Sealing Face Ød$_1$	0.1 <> 0.4	4 max	4 <> 16	5 <> 18
Static Sealing Face ØD$_1$	1.6 max	10 max	63 max	70
maxStatic Housing Faces L$_1$	3.2 max	16 max	125 max	140 max
Chamfers & Radii				
Groove Section ≤ S mm	3.75	5.50	7.75	
Min Chamfer C mm	2.0	3.0	5.0	
Max Fillet Rad r$_1$ mm	0.4	0.8	1.2	
Tolerances	Ød$_1$	ØD$_1$	L$_1$ mm	
	f9	H11	+0.25 -0	

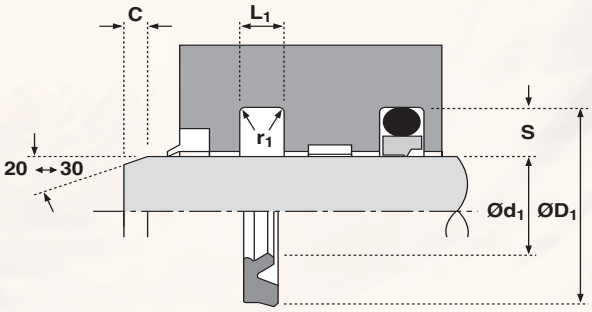

Design

The Hallite 616 is a revolutionary seal from Hallite, incorporating the sealing efficiency of the Hallite 605 with the compact grooves used by PTFE rod seals.

Hallite's 616 is an asymmetric twin lip seal, designed for light and medium duty applications where space and friction are at a premium.

Manufactured in Hallite's high performance polyurethane Hythane® 181, the Hallite 616 is an extremely flexible seal making installation very easy.

Features

- **Easy assembly**
- **Twin lip performance**
- **ISO 7425 housings**

NB: Part numbers suffixed by "‡" indicate housing sizes to meet ISO7425-2.

NOTE

Hallite 616 is used either as a single seal or in a combination with Hallite 16. The latter arrangement is recommended when pressure peaks can occur, as in cylinders with cushioning, in this case the Hallite 16 is fitted into the pressure side of the housing while the Hallite 616 ensures minimal leakage sealing.

It is recommended that Hallite Seals be consulted when considering this arrangement.

Hallite
Fenner Advanced Sealing Technologies

OTP®

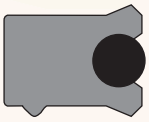

620

Technical details

	Metric		Inch	
Operating conditions				
Maximum Speed	1.0 m/sec		3.0 ft/sec	
Temperature Range	-45°C +110°C		-50°F +230°F	
Maximum Pressure	400 bar		6000 p.s.i.	
Maximum extrusion gap	**Figures show the maximum permissible gap all on one side using minimum rod Ø and maximum clearance Ø. Refer to Housing Design section**			
Pressure bar	160	250	400	
Maximum Gap mm	0.6	0.5	0.4	
Pressure p.s.i.	2400	3750	6000	
Maximum Gap in	0.024	0.020	0.016	
Surface roughness	µmRa	µmRt	µinCLA	µinRMS
Dynamic Sealing Face ØD_1	0.1 <> 0.4	4 max	4 <> 16	5 <> 18
Static Sealing Face Ød_1	1.6 max	10 max	63 max	70 max
Static Housing Faces L_1	3.2 max	16 max	125 max	140 max
Chamfers & Radii				
Groove Section ≤ S in	0.125	0.187		
Min Chamfer C in	0.093	0.093		
Max Fillet Rad r_1 in	0.008	0.008		
Max Fillet Rad r_2 in	0.016	0.016		
Tolerances	Ød_1 f9	ØD_1 Js11	L_1 in +0.010 -0	

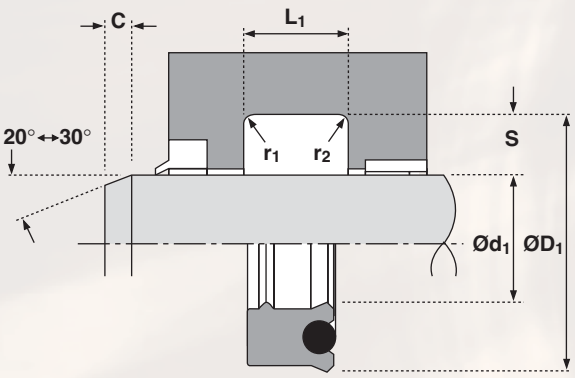

Design

Hallite's 620 design incorporates features from the Hallite 621 to provide a twin lip alternative to Hallite's 500 series products.
The shell is moulded in Hallite's high performance polyurethane - Hythane® 181 - ensuring flexibility for easy installation and performance at low temperatures.
The 620 benefits from the Hallite's twin lip profile for dry rod sealing.

Features

- **Twin lip design offering:**
  Lower friction
  Improved sealing
  Primary lip protection
  Increased seal stability
- **Improved shock handling**
- **Easy installation**
- **Complete lip actuation**

Hallite
Fenner Advanced Sealing Technologies

OTP®

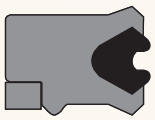

621

Technical details

	Metric	Inch
Operating conditions		
Maximum Speed	1.0 m/sec	3.0 ft/sec
Temperature Range	-45°C +110°C	-50°F +230°F
Maximum Pressure	700 bar	10,000 p.s.i.

Maximum extrusion gap

Figures show the maximum permissible gap all on one side using minimum rod Ø and maximum clearance Ø. Refer to Housing Design section

Pressure bar	160	250	400	500	700
Maximum Gap mm	1.0	0.8	0.6	0.4	0.25
Pressure p.s.i.	2400	3750	6000	7500	10,000
Maximum Gap in	0.040	0.032	0.024	0.016	0.010

Surface roughness	µmRa	µmRt	µinCLA	µinRMS
Dynamic Sealing Face Ød$_1$	0.1 <> 0.4	4 max	4 <> 16	5 <> 18
Static Sealing Face ØD$_1$	1.6 max	10 max	63 max	70 max
Static Housing Faces L$_1$	3.2 max	16 max	125 max	140 max

Chamfers & Radii						
Groove Section ≤ S mm	4.0	5.0	7.5	10.0	12.5	15.0
Min Chamfer C mm	3.0	3.5	5.0	6.5	7.0	8.0
Max Fillet Rad r$_1$ mm	0.2	0.4	0.8	0.8	1.2	1.6
Max Fillet Rad r$_2$ mm	0.4	0.8	1.2	1.2	1.6	2.4
Groove Section ≤ S in	0.125	0.187	0.250	0.312	0.375	0.500
Min Chamfer C in	0.093	0.093	0.125	0.156	0.187	0.217
Max Fillet Rad r$_1$ in	0.008	0.008	0.016	0.016	0.032	0.032
Max Fillet Rad r$_2$ in	0.016	0.016	0.032	0.032	0.047	0.047

Tolerances	Ød$_1$	ØD$_1$	L$_1$ mm	L$_1$ in
	f9	Js11	+0.25 -0	+0.010 -0

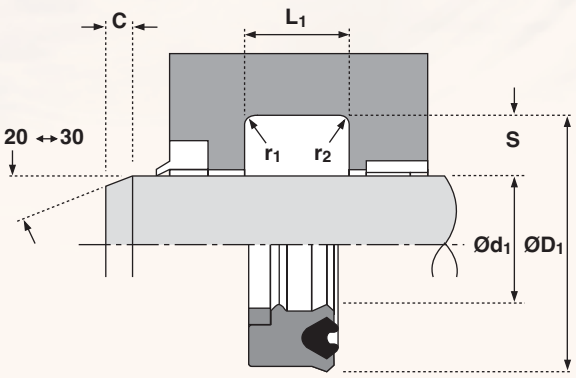

Design

The Hallite 621 is a top of the range high pressure rod seal. The design of the seal incorporates a unique profiled NBR energiser to ensure complete lip actuation under all pressure conditions and to cushion the seal against shock loadings.

The shell is moulded in Hallite's high performance polyurethane Hythane® 181, ensuring flexibility for installation and performance at low temperatures.

The Hallite 621 also benefits from Hallite's twin lip profile for dry rod sealing.

Features

- **High pressure/shock load capability**
- **Twin lip design offering: lower friction, improved sealing, primary lip protection, increased seal stability.**
- **Polyacetal anti-extrusion ring.**

NB: Part numbers suffixed by "†" are designed to suit popular Asian housings.

Part numbers suffixed by "‡" indicate housing sizes to meet ISO5597.

621

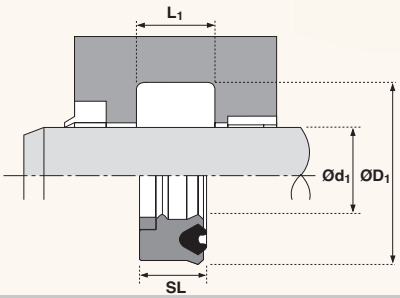

Ød1	TOL f9	ØD1	TOL Js11	SL	L1 +0.25-0	PART No.
30	-0.020 -0.072	40	+0.08 -0.08	7.3	8.0	4577110
35	-0.025 -0.087	50	+0.08 -0.08	9.5	10.5	4335310
36	-0.025 -0.087	46	+0.08 -0.08	7.3	8.0	4317010‡
40	-0.025 -0.087	50	+0.08 -0.08	7.3	8.0	4317110‡
40	-0.025 -0.087	50	+0.08 -0.08	10.0	11.0	4755010
45	-0.025 -0.087	55	+0.10 -0.10	7.3	8.0	4317210‡
45	-0.025 -0.087	60	+0.10 -0.10	11.4	12.5	4295510‡
50	-0.025 -0.087	60	+0.10 -0.10	7.3	8.0	4317310‡
50	-0.025 -0.087	60	+0.10 -0.10	10.0	11.0	4802310†
50	-0.025 -0.087	65	+0.10 -0.10	10.0	11.0	4752910
50	-0.025 -0.087	65	+0.10 -0.10	11.4	12.5	4293410‡
55	-0.030 -0.104	70	+0.10 -0.10	9.0	10.0	4810210†
55	-0.030 -0.104	70	+0.10 -0.10	11.4	12.5	4403610
56	-0.030 -0.104	71	+0.10 -0.10	11.4	12.5	4317410‡
60	-0.030 -0.104	73	+0.10 -0.10	13.0	14.0	4526010†
60	-0.030 -0.104	75	+0.10 -0.10	11.4	12.5	4298410
63	-0.030 -0.104	78	+0.10 -0.10	11.4	12.5	4317510‡
63	-0.030 -0.104	83	+0.11 -0.11	11.8	13.0	4520510†
65	-0.030 -0.104	75	+0.10 -0.10	10.0	11.0	4755110
65	-0.030 -0.104	80	+0.10 -0.10	10.0	11.0	4761810
65	-0.030 -0.104	80	+0.10 -0.10	11.4	12.5	4783710
65	-0.030 -0.104	80	+0.10 -0.10	13.0	14.0	4810310

Ød1	TOL f9	ØD1	TOL Js11	SL	L1 +0.25-0	PART No.
70	-0.030 -0.104	83	+0.11 -0.11	13.0	14.0	4810410†
70	-0.030 -0.104	85	+0.11 -0.11	11.4	12.5	4317610‡
75	-0.030 -0.104	88	+0.11 -0.11	13.0	14.0	4526110†
75	-0.030 -0.104	90	+0.11 -0.11	12.0	13.0	4810510
75	-0.030 -0.104	90	+0.11 -0.11	13.0	14.0	4784710
75	-0.030 -0.104	95	+0.11 -0.11	11.4	12.5	4810610
75	-0.030 -0.104	95	+0.11 -0.11	14.6	16.0	4801510†
80	-0.030 -0.104	93	+0.11 -0.11	13.0	14.0	4810710†
80	-0.030 -0.104	95	+0.11 -0.11	11.4	12.5	4317710‡
80	-0.030 -0.104	95	+0.11 -0.11	13.0	14.0	4540610†
85	-0.036 -0.123	100	+0.11 -0.11	11.8	13.0	4766410
85	-0.036 -0.123	100	+0.11 -0.11	13.0	14.0	4540710†
85	-0.036 -0.123	105	+0.11 -0.11	14.6	16.0	4810810†
90	-0.036 -0.123	105	+0.11 -0.11	11.4	12.5	4317810‡
90	-0.036 -0.123	105	+0.11 -0.11	13.0	14.0	4526310†
90	-0.036 -0.123	110	+0.11 -0.11	14.6	16.0	4810910†
95	-0.036 -0.123	110	+0.11 -0.11	12.0	13.0	4811010†
95	-0.036 -0.123	110	+0.11 -0.11	13.0	14.0	4540810†
95	-0.036 -0.123	115	+0.11 -0.11	14.6	16.0	4811110†
100	-0.036 -0.123	115	+0.11 -0.11	13.0	14.0	4540910†
100	-0.036 -0.123	120	+0.11 -0.11	14.6	16.0	4317910‡
105	-0.036 -0.123	120	+0.11 -0.11	12.0	13.0	4811210†

621

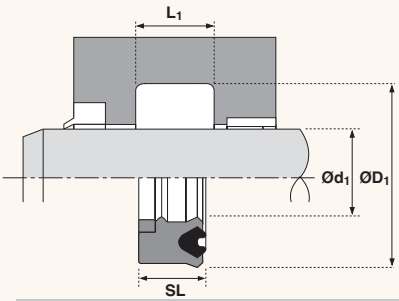

Ød1	TOL f9	ØD1	TOL Js11	SL	L1 +0.010 -0	PART No.
105	-0.036 -0.123	120	+0.11 -0.11	13.0	14.0	4811310†
105	-0.036 -0.123	125	+0.13 -0.13	14.6	16.0	4811410†
110	-0.036 -0.123	125	+0.13 -0.13	13.0	14.0	4811510†
110	-0.036 -0.123	130	+0.13 -0.13	13.0	14.0	4541010†
110	-0.036 -0.123	130	+0.13 -0.13	14.6	16.0	4318010‡
115	-0.036 -0.123	135	+0.13 -0.13	14.6	16.0	4783810
120	-0.036 -0.123	135	+0.13 -0.13	14.6	16.0	4318110
120	-0.036 -0.123	140	+0.13 -0.13	13.0	14.0	4541110†
120	-0.036 -0.123	140	+0.13 -0.13	14.6	16.0	4783910†
125	-0.043 -0.143	145	+0.13 -0.13	14.6	16.0	4318210‡
130	-0.043 -0.143	145	+0.13 -0.13	13.0	14.0	4811610†

Ød1	TOL f9	ØD1	TOL Js11	SL	L1 +0.010 -0	PART No.
130	-0.043 -0.143	150	+0.13 -0.13	14.6	16.0	4709810†
140	-0.043 -0.143	155	+0.13 -0.13	13.0	14.0	4811710†
140	-0.043 -0.143	160	+0.13 -0.13	13.0	14.0	4541210†
140	-0.043 -0.143	160	+0.13 -0.13	14.6	16.0	4318310‡
150	-0.043 -0.143	170	+0.13 -0.13	14.6	16.0	4784010
160	-0.043 -0.143	180	+0.13 -0.13	14.6	16.0	4454810
160	-0.043 -0.143	185	+0.15 -0.15	14.5	16.0	4723410
180	-0.043 -0.143	200	+0.15 -0.15	14.6	16.0	4454910
200	-0.050 -0.165	220	+0.15 -0.15	14.6	16.0	4455110
215	-0.050 -0.165	235	+0.15 -0.15	14.6	16.0	4705610

Hallite
Fenner Advanced Sealing Technologies

OTP®

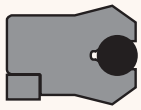

652

Technical details

	Metric	Inch
Operating conditions		
Maximum Speed	1.0 m/sec	3.0 ft/sec
Temperature Range	-45°C + 110°C	-50°F + 230°F
Maximum Pressure	700 bar	10,000 p.s.i.

Maximum extrusion gap

Figures show the maximum permissible gap all on one side using minimum rod Ø and maximum clearance Ø. Refer to Housing Design section

Pressure bar	160	250	400	500	700
Maximum Gap mm	1.0	0.8	0.6	0.4	0.25
Pressure p.s.i.	2400	3750	6000	7500	10,000

Surface roughness	µmRa	µmRt	µinCLA	µinRMS
Dynamic Sealing Face Ød$_1$	0.1 <> 0.4	4 max	4 <> 16	5 <> 18
Static Sealing Face ØD$_1$	1.6 max	10 max	63 max	70 max
Static Housing Faces L$_1$	3.2 max	16 max	125 max	140 max

Chamfers & Radii

Groove Section ≤ S mm	4.0	5.0	7.5	10.0	12.5	15.0
Min Chamfer C mm	3.0	3.5	5.0	6.5	7.0	8.0
Max Fillet Rad r$_1$ mm	0.2	0.4	0.8	0.8	1.2	1.6
Max Fillet Rad r$_2$ mm	0.4	0.8	1.2	1.2	1.6	2.4

Tolerances	Ød$_1$	ØD$_1$	L$_1$ mm
	f9	Js11	+0.25 -0

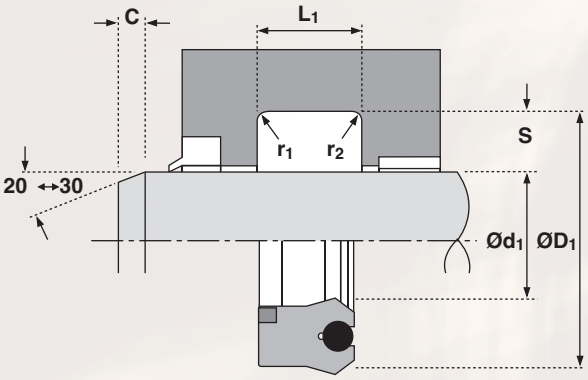

Design

The Hallite 652 is a high pressure rod seal designed specifically for longwall mining applications. The seal design comprises three elements; an O ring energiser*, a polyurethane shell and a polyacetal anti-extrusion ring.

The shell is manufactured in Hythane® 181 to provide flexibility for installation and responsiveness to the sealing lip. The rubber energiser ensures complete lip actuation under all pressure conditions and cushions the seal against shock loadings. The anti-extrusion ring enables the seal to withstand side loads and extreme pressure peaks during operation, even with the extrusion gaps which are the result of using remote plastic bearing strips such as Hallite 506.

*In some cases a profiled energiser (as T621) is used.

Features

- **High pressure/shock load capability**
- **Polyacetal anti-extrusion ring.**
- **Responsive sealing**

652

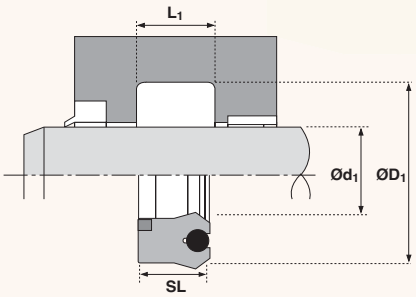

Ød1	TOL f9	ØD1	TOL Js11	SL	L1 +0.25 -0	PART No.
32	-0.025 -0.087	44.0	+0.080 -0.080	8.7	9.6	4344111
40	-0.025 -0.087	52.0	+0.095 -0.095	8.7	9.6	4326311
50	-0.025 -0.087	62.0	+0.095 -0.095	8.7	9.6	4326411
60	-0.030 -0.104	69.8	+0.095 -0.095	11.4	12.5	4534910*
60	-0.030 -0.104	72.0	+0.095 -0.095	8.7	9.6	4344211*
60	-0.030 -0.104	75.0	+0.095 -0.095	11.9	13.0	4451211
63	-0.030 -0.104	75.0	+0.095 -0.095	8.7	9.6	4326511*
70	-0.030 -0.104	82.0	+0.110 -0.110	8.7	9.6	4344311*
75	-0.030 -0.104	95.0	+0.110 -0.110	12.5	14.0	4547810*
80	-0.030 -0.104	95.0	+0.110 -0.110	11.8	13.0	4797410
80	-0.030 -0.104	95.0	+0.110 -0.110	14.5	16.0	4446511
85	-0.036 -0.123	97.0	+0.110 -0.110	8.7	9.6	4344511*
90	-0.036 -0.123	105.0	+0.110 -0.110	14.5	16.0	4428011
100	-0.036 -0.123	115.0	+0.110 -0.110	11.0	12.0	4528010*
100	-0.036 -0.123	115.0	+0.110 -0.110	14.5	16.0	4397611*
105	-0.036 -0.123	120.0	+0.110 -0.110	11.8	13.0	4406711*
105	-0.036 -0.123	120.0	+0.110 -0.110	14.5	16.0	4781810
110	-0.036 -0.123	125.0	+0.125 -0.125	14.5	16.0	4445611
115	-0.036 -0.123	130.0	+0.125 -0.125	14.5	16.0	4455411
120	-0.036 -0.123	135.0	+0.125 -0.125	14.5	16.0	4452011
125	-0.043 -0.143	140.0	+0.125 -0.125	14.5	16.0	4446911
128	-0.043 -0.143	143.0	+0.125 -0.125	14.5	16.0	4581611

Ød1	TOL f9	ØD1	TOL Js11	SL	L1 +0.25 -0	PART No.
130	-0.043 -0.143	145.0	+0.125 -0.125	14.5	16.0	4782410
135	-0.043 -0.143	155.0	+0.125 -0.125	13.6	15.0	4475410*
140	-0.043 -0.143	155.0	+0.125 -0.125	14.5	16.0	4753210
150	-0.043 -0.143	165.0	+0.125 -0.125	14.5	16.0	4389111*
160	-0.043 -0.143	175.0	+0.125 -0.125	11.7	12.8	4484010*
160	-0.043 -0.143	175.0	+0.125 -0.125	14.5	16.0	4405011*
160	-0.043 -0.143	177.0	+0.125 -0.125	14.5	16.0	4767610
160	-0.043 -0.143	185.0	+0.145 -0.145	18.8	20.0	4401711*
165	-0.043 -0.143	182.0	+0.145 -0.145	14.5	16.0	4537411
170	-0.043 -0.143	185.0	+0.145 -0.145	14.5	16.0	4745610
177	-0.043 -0.143	192.0	+0.145 -0.145	14.5	16.0	4445711
180	-0.043 -0.143	195.0	+0.145 -0.145	14.5	16.0	4734610
185	-0.050 -0.165	200.0	+0.145 -0.145	14.5	16.0	4777210
185	-0.050 -0.165	210.0	+0.145 -0.145	18.0	20.0	4546611
190	-0.050 -0.165	205.0	+0.145 -0.145	14.5	16.0	4430811
195	-0.050 -0.165	210.0	+0.145 -0.145	14.5	16.0	4459311
195	-0.050 -0.165	215.0	+0.145 -0.145	14.5	16.0	4550511
200	-0.050 -0.165	220.0	+0.145 -0.145	14.5	16.0	4387611*
210	-0.050 -0.165	230.0	+0.145 -0.145	14.5	16.0	4472911
220	-0.050 -0.165	235.0	+0.145 -0.145	14.5	16.0	4759610
220	-0.050 -0.165	240.0	+0.145 -0.145	14.5	16.0	4544510*
225	-0.050 -0.165	240.0	+0.145 -0.145	14.5	16.0	4445811

Hallite
Fenner Advanced Sealing Technologies

OTP®

652

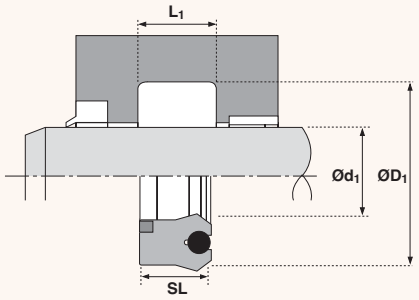

Ød1	TOL f9	ØD1	TOL Js11	SL	L1 +0.25 -0	PART No.
225	-0.050 -0.165	250.0	+0.145 -0.145	18.0	20.0	4537511
230	-0.050 -0.165	247.0	+0.160 -0.160	14.5	16.0	4767710
230	-0.050 -0.165	249.3	+0.160 -0.160	14.5	16.0	4439411
230	-0.050 -0.165	250.0	+0.160 -0.160	14.5	16.0	4707210
230	-0.050 -0.165	255.0	+0.160 -0.160	22.8	25.0	4555511
235	-0.050 -0.165	255.0	+0.160 -0.160	14.5	16.0	4771410
240	-0.050 -0.165	260.0	+0.160 -0.160	14.5	16.0	4496511
245	-0.050 -0.165	270.0	+0.160 -0.160	18.0	20.0	4546711
250	-0.050 -0.165	270.0	+0.160 -0.160	14.5	16.0	4728810
255	-0.056 -0.186	275.0	+0.160 -0.160	14.5	16.0	4578611
260	-0.056 -0.186	280	+0.160 -0.160	16.4	18.0	4499011
265	-0.056 -0.186	285	+0.160 -0.160	14.5	16.0	4722110
275	-0.056 -0.186	295	+0.160 -0.160	14.5	16.0	4807310
280	-0.056 -0.186	300	+0.160 -0.160	14.5	16.0	4713910
285	-0.056 -0.186	305	+0.160 -0.160	16.4	18.0	4767810
285	-0.056 -0.186	310	+0.160 -0.160	18.0	20.0	4537611
290	-0.056 -0.186	310	+0.160 -0.160	16.4	18.0	4475111
290	-0.056 -0.186	315	+0.160 -0.160	18.0	20.0	4759410
295	-0.056 -0.186	315	+0.160 -0.160	16.4	18.0	4598211
300	-0.056 -0.186	320	+0.180 -0.180	14.5	16.0	4525110*
305	-0.056 -0.186	325	+0.180 -0.180	16.4	18.0	4473011

Ød1	TOL f9	ØD1	TOL Js11	SL	L1 +0.25 -0	PART No.
305	-0.056 -0.186	330	+0.180 -0.180	18.0	20.0	4546811
305	-0.056 -0.186	335	+0.180 -0.180	16.4	18.0	4721910
320	-0.062 -0.202	340	+0.180 -0.180	14.5	16.0	4544410*
320	-0.062 -0.202	340	+0.180 -0.180	16.4	18.0	4707310
325	-0.062 -0.202	355	+0.180 -0.180	18.0	20.0	4555711
330	-0.062 -0.202	350	+0.180 -0.180	16.0	18.0	4796710
335	-0.062 -0.202	355	+0.180 -0.180	16.4	18.0	4496611
335	-0.062 -0.202	360	+0.180 -0.180	18.0	20.0	4831710
340	-0.062 -0.202	360	+0.180 -0.180	18.5	20.5	4788110
340	-0.062 -0.202	365	+0.180 -0.180	18.0	20.0	4732810
350	-0.062 -0.202	375	+0.180 -0.180	18.0	20.0	4718010
355	-0.062 -0.202	380	+0.180 -0.180	18.0	20.0	4578411
360	-0.062 -0.202	385	+0.180 -0.180	18.0	20.0	4781110
370	-0.062 -0.202	395	+0.180 -0.180	18.0	20.0	4579710
380	-0.062 -0.202	405	+0.200 -0.200	18.0	20.0	4752010*
390	-0.062 -0.202	415	-0.200 -0.200	18.0	20.0	4730010*
395	-0.062 -0.202	420	-0.200 -0.200	18.0	20.0	4807110
410	-0.068 -0.223	435	-0.200 -0.200	18.0	20.0	4785110*
415	-0.068 -0.223	445	-0.200 -0.200	20.5	22.5	4820510
470	-0.068 -0.223	495	-0.200 -0.200	18.0	20.0	4814610

* Indicates product fitted with profiled energiser

Hallite
Fenner Advanced Sealing Technologies

OTP®

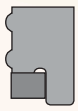

653

Technical details

	Metric	Inch
Operating conditions		
Maximum Speed	1.0 m/sec	3.0 ft/sec
Temperature Range	-45°C + 110°C	-50°F + 230°F
Maximum Pressure	700 bar	10,000 p.s.i.

Maximum extrusion gap

Figures show the maximum permissible gap all on one side using minimum rod Ø and maximum clearance Ø. Refer to Housing Design section

Pressure bar	160	250	400	500	700
Maximum Gap (S < =6) mm	0.6	0.5	0.4	0.3	0.2
Maximum Gap (S > 6) mm	1.0	0.8	0.6	0.4	0.25
Pressure p.s.i.	2400	3750	6000	7500	10,000
Maximum Gap (S < =0.250) in	0.024	0.020	0.016	0.012	0.008
Maximum Gap (S > 0.250) in	0.040	0.032	0.024	0.016	0.010

Surface roughness	µmRa	µmRt	µinCLA	µinRMS
Dynamic Sealing Face $Ød_1$	0.1 <> 0.4	4 max	4 <> 16	5 <> 18
Static Sealing Face L_1	1.6 max	10 max	63 max	70 max
Static Housing Faces $ØD_1, L_1$	3.2 max	16 max	125 max	140 max

Chamfers & Radii				
Groove Section ≤ S mm	3.75	5.50	7.75	10.50
Min Chamfer C mm	3.00	3.50	5.00	7.50
Max Fillet Rad r_1 mm	0.50	0.70	1.20	1.60
Groove Section ≤ S in	0.150	0.215	0.306	0.413
Min Chamfer C in	0.125	0.140	0.200	0.300
Max Fillet Rad r_1 in	0.020	0.028	0.047	0.062

Tolerances	$Ød_1$	$ØD_1$	L_1
mm	f9	H10	+0.25 -0
in	f9	Js11	+0.010 -0

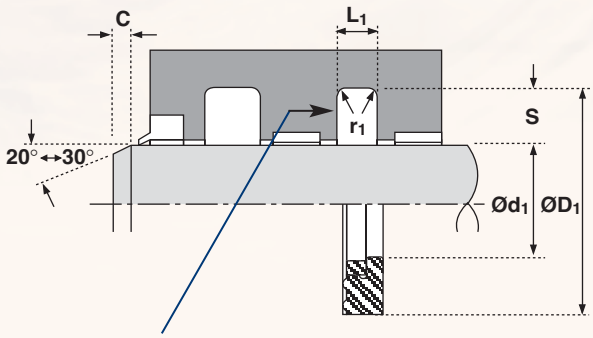

N.B. This is a sealing surface

NB : Part numbers suffixed by "‡" indicate housing sizes to meet ISO 7425-2

Design

The Hallite 653 is a buffer seal developed to work in conjunction with high performance rod seals, such as the Hallite 605 and 621. It is also interchangeable with common PTFE buffer seal housings.

The seal, which is manufactured in Hythane® 181, is designed to provide a valve action to prevent excessive pressure build up in the cavity between the buffer seal and the rod seal. A polyacetal anti-extrusion ring is fitted to provide maximum extrusion resistance against shock pressure loads.

The Hallite 653 is a patented product : European patent no. 0427554BI.
U.S.A. patent no. 5088747.

Features

- **Prevents inter-seal pressure build up**
- **Interchangeable with common PTFE buffer seal housings**
- **Easy installation**
- **Long life**
- **Excellent temperature range**

653

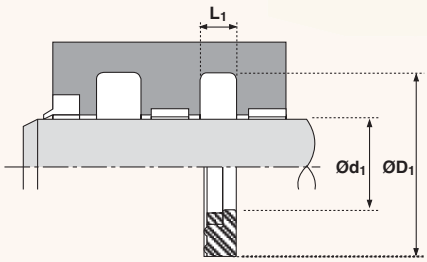

metric

Ød1	TOL f9	ØD1	TOL H10	L1 +0.25-0	PART No.
40.0	-0.025 -0.087	55.5	+0.120 -0.00	6.3	4772710
45.0	-0.025 -0.087	56.0	+0.120 -0.00	4.2	4575510‡
45.0	-0.025 -0.087	60.5	+0.120 -0.00	6.3	4772810
50.0	-0.025 -0.087	65.5	+0.120 -0.000	6.3	4403210
55.0	-0.030 -0.104	70.5	+0.120 -0.000	6.3	4403310
60.0	-0.030 -0.104	75.5	+0.120 -0.000	6.3	4403410
63.0	-0.030 -0.104	78.5	+0.120 -0.000	6.3	4751110‡
65.0	-0.030 -0.104	80.5	+0.140 -0.000	6.3	4742110
70.0	-0.030 -0.104	85.5	+0.140 +0.000	6.3	4742310‡
75.0	-0.030 -0.104	90.5	+0.140 +0.000	6.3	4742410
80.0	-0.030 -0.104	95.5	+0.140 +0	6.3	4742510‡
85.0	-0.036 -0.123	100.5	+0.140 +0	6.3	4742610
90.0	-0.036 -0.123	105.5	+0.140 -0	6.3	4523710‡
95.0	-0.036 -0.123	110.5	+0.140 -0	6.3	4742810

Ød1	TOL f9	ØD1	TOL H10	L1 +0.25-0	PART No.
100.0	-0.036 -0.123	115.5	+0.140 -0.	6.3	4742910‡
110.0	-0.036 -0.123	125.5	+0.160 -0	6.3	4743010‡
124.0	-0.036 -0.123	139.5	+0.160 -0	6.3	4824710
125.0	-0.036 -0.123	140.5	+0.160 -0	6.3	4824810‡
130.0	-0.036 -0.123	145.5	+0.160 -0	6.3	4830210
135.0	-0.036 -0.123	150.5	+0.160 -0	6.3	4824910
140.0	-0.043 -0.143	155.5	+0.160 -0	6.3	4770810‡
150.0	-0.043 -0.143	165.5	+0.160 -0	6.3	4825010
150.0	-0.043 -0.143	170.0	+0.160 -0	10.0	4804110
155.0	-0.043 -0.143	170.5	+0.160 -0	6.3	4825110
160.0	-0.043 -0.143	175.5	+0.160 -0	6.3	4825210‡
170.0	-0.043 -0.143	185.5	+0.185 -0	6.3	4820210
180.0	-0.050 -0.165	195.5	+0.185 -0	6.3	4804010‡
215.0	-0.050 -0.165	236.0	+0.185 -0	8.1	4705710

Hallite
Fenner Advanced Sealing Technologies

OTP®

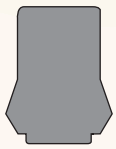

657

Technical details

	Metric		Inch	
Operating conditions				
Speed	Static		Static	
Temperature Range	-45°C +110°C		-50°F +230°F	
Maximum Pressure	600 bar		8500 p.s.i.	
Surface roughness	µmRa	µmRt	µinCLA	µinRMS
Sealing Faces	0.8	6.3	32	35
Mating Face	3	20 ÷ 30	120	120
Radii				
Max Fillet Rad r_1 mm	0.80			
Max Fillet Rad r_1 in	0.03			
Tolerances	$ØD_1$	S	L_1	L_2
mm	±0.100	±0.25	±0.050	+0 -0.25
in	+0.005 -0	±0.015	+0.005 -0	+0 -0.010

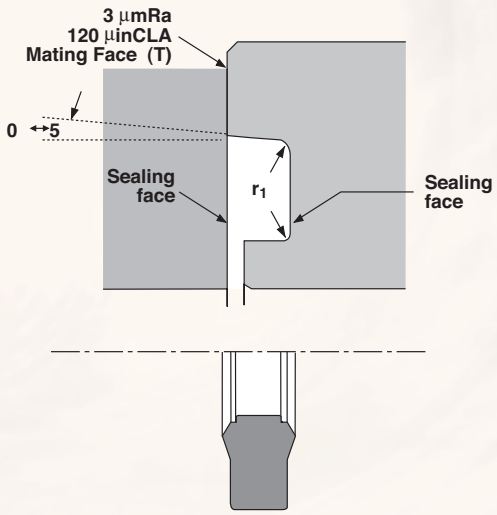

Design

The Hallite 657 has been designed especially to fit SAE J518 flanges.

High pressure and pumping are common problems which prevent reliable sealing in applications where O rings are fitted. Hallite's 657 overcomes these.

Manufactured as standard in Hallite's high quality Hythane® 181, the material provides excellent extrusion resistance and is able to perform at both low and high temperatures. The seal's profile is designed to ensure that pumping is prevented and to provide reliable sealing of the flange.

In addition to the high specification material, the Hallite 657 is also manufactured in an industrial standard polyurethane.

Please ensure that the correct part number is specified for the material option that is required. See left for details.

N.B. Also listed, two non-SAE seal sizes for metric flanges.

Material Options

Material	last two digits of part number
Hythane	_ _ _ _ _ **00**
93 IRHD Polyurethane (AU)	_ _ _ _ _ **01**

NB: Temperature rating for 93 IRHD Polyester Polyurethane (AU) changes to:
-30°C +100°C -22°F +212°F

Features

- **High specification material**
- **Industrial grade material option**
- **SAE flange sizes**

657

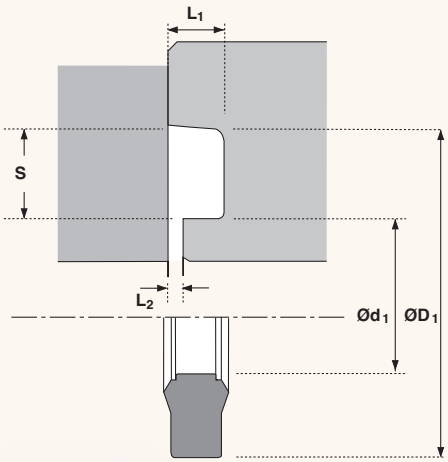

metric

ØD1	TOL	Ød1	S	TOL	L1	TOL	L2	TOL	PART No.
33.5	+0.10 -0.10	26.3	3.6	+0.25 -0.25	2.200	+0.05 -0.05	0.25	+0.00 -0.25	44328_ _
45.0	+0.10 -0.10	36.2	4.4	+0.25 -0.25	3.300	+0.05 -0.05	0.25	+0.00 -0.25	44912_ _

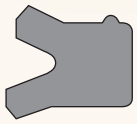

659

Technical details

	Metric		Inch	
Operating conditions				
Maximum Speed	1.0 m/sec		3.0 ft/sec	
Temperature Range	-45°C +110°C		-50°F +230°F	
Maximum Pressure	400 bar		6000 p.s.i.	
Maximum extrusion gap	**Figures show the maximum permissible gap all on one side using minimum rod Ø and maximum clearance Ø. Refer to Housing Design section**			
Pressure bar	160	250	400	
Maximum Gap mm	0.6	0.5	0.4	
Pressure p.s.i.	2400	3750	6000	
Maximum Gap in	0.024	0.020	0.016	
Surface roughness	µmRa	µmRt	µinCLA	µinRMS
Dynamic Sealing Face ØD_1	0.1 <> 0.4	4 max	4 <> 16	5 <> 18
Static Sealing Face Ød_1	1.6 max	10 max	63 max	70 max
Static Housing Faces L_1	3.2 max	16 max	125 max	140 max
Chamfers & Radii				
Groove Section ≤ S mm	4.0	5.0	7.5	10.0
Min Chamfer C mm	3.0	3.5	5.0	6.5
Max Fillet Rad r_1 mm	0.2	0.4	0.8	0.8
Groove Section ≤ S in	0.125	0.187	0.250	0.500
Min Chamfer C in	0.093	0.093	0.125	0.217
Max Fillet Rad r_1 in	0.008	0.008	0.016	0.032
Tolerances	ØD_1	Ød_1	L_1	
mm	H9	js11	+0.25 -0	
in	+0.004 -0	0 -0.002	+0.010 -0	

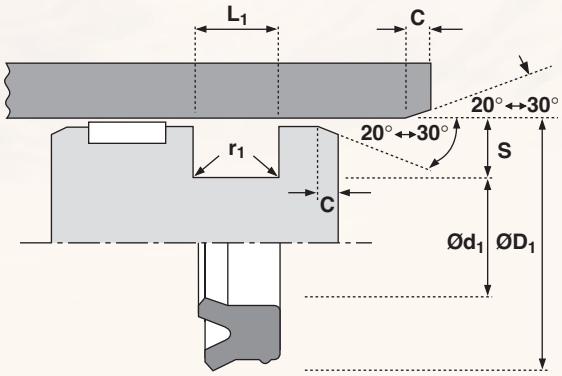

Design

The Hallite 659 is an asymmetric piston seal designed to offer effective bore sealing in a wide variety of applications.

The outer dynamic lip is shorter and more robust to provide improved sealing and compression set characteristics over conventional U rings. The seal also features a secondary lip that provides a pocket for lubrication as well as the benefits listed below.

For use in single acting applications only, the seal is manufactured in Hallite's high performance polyurethane Hythane® 181. The Hallite 659 provides the following benefits:

Features

- **Flexible for easy installation**
- **Excellent wear resistance**
- **High resistance to extrusion**
- **Wide temperature range**
- **Twin lip design for: improved sealing, lower friction ,increased seal stability, primary lip protection**

Note: Variations of this seal are available in other sizes, please contact your local Hallite sales office for additional information and technical details.

659

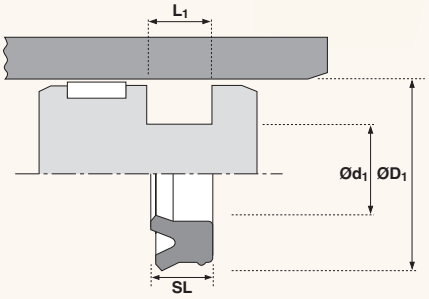

metric

ØD1	TOL H9	Ød1	TOL js11	SL	L1 + 0.25 -0	PART No.
90.00	+0.09 +0.00	75.00	+0.11 -0.11	11.50	12.50	4775500
100.00	+0.09 +0.00	80.00	+0.11 -0.11	14.50	16.00	4580300
100.00	+0.09 +0.00	85.00	+0.11 -0.11	11.50	12.50	4775600

ØD1	TOL H9	Ød1	TOL js11	SL	L1 + 0.25 -0	PART No.
110.00	+0.09 +0.00	90.00	+0.11 -0.11	14.50	16.00	4580400
110.00	+0.09 +0.00	95.00	+0.11 -0.11	11.50	12.50	4775700
115.00	+0.09 +0.00	130.00	+0.11 -0.11	11.50	12.50	4813000

Hallite
Fenner Advanced Sealing Technologies

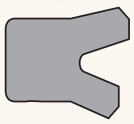

663

Technical details

	Metric			Inch	
Operating conditions					
Maximum Speed	1.0 m/sec			3.0 ft/sec	
Temperature Range	-45°C +110°C			-50°F +230°F	
Maximum Pressure	400 bar			6000 p.s.i.	

Maximum extrusion gap

Figures show the maximum permissible gap all on one side using minimum rod Ø and maximum clearance Ø. Refer to Housing Design section

Pressure bar	160	250	400
Maximum Gap mm	0.6	0.5	0.4
Pressure p.s.i.	2400	3750	6000

Surface roughness	µmRa	µmRt	µinCLA	µinRMS
Dynamic Sealing Face Ød$_1$	0.1 <> 0.4	4 max	4 <> 16	5 <> 18
Static Sealing Face ØD$_1$	1.6 max	10 max	63 max	70 max
Static Housing Faces L$_1$	3.2 max	16 max	125 max	140 max

Chamfers & Radii				
Groove Section ≤ S mm	4.0	5.0	7.5	10
Min Chamfer C mm	3.0	3.5	5.0	6.5
Max Fillet Rad r$_1$ mm	0.2	0.4	0.8	0.8
Max Fillet Rad r$_2$ mm	0.4	0.8	1.2	1.2

Tolerances	Ød$_1$	ØD$_1$	L$_1$ mm
	f9	Js11	+0.25 -0

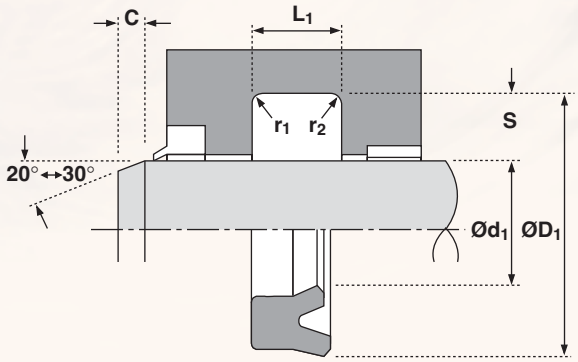

Design

The Hallite 663 is an asymmetric seal offering superlative dry rod sealing for light and medium duty applications.

The seal is a single lip modification of the well established Hallite 605 profile and is ideal for applications which require a double lip wiper such as the Hallite 839, Hallite 844 or Hallite 846.

Manufactured in Hythane® – 181, the Hallite 663 is an extremely flexible seal making installation very easy. The Hallite 663 is also available in Hallite 361 material.

Features

- **Dry rod sealing performance when used with Hallite 839, 844 or 846 wipers**
- **Easy installation**

Material Options

Hythane® 181
Last digit of part no. _ _ _ _ _ _ **0**

Hallite® 361
Last digit of part no. _ _ _ _ _ _ **6**

663

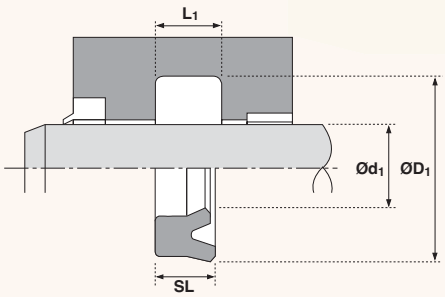

Ød1	TOL f9	ØD1	TOL Js11	SL	L1 +0.25-0	PART No.
16	-0.016 -0.059	24.0	+0.06 -0.06	5.7	6.3	478930_
18	-0.016 -0.059	26.0	+0.06 -0.06	5.7	6.3	478940_
20	-0.016 -0.059	28.0	+0.06 -0.06	5.7	6.3	482740_
24	-0.020 -0.072	34.0	+0.08 -0.08	7.8	8.5	476450_
25	-0.020 -0.072	33.0	+0.08 -0.08	5.7	6.3	478950_
26	-0.020 -0.072	36.0	+0.08 -0.08	10.0	11.0	472600_
28	-0.020 -0.072	36.0	+0.08 -0.08	5.7	6.3	478960_
30	-0.020 -0.072	38.0	+0.08 -0.08	5.7	6.3	483040_
30	-0.020 -0.072	38.0	+0.08 -0.08	8.2	9.0	478970_
30	-0.020 -0.072	40.0	+0.08 -0.08	10.0	11.0	481180_
32	-0.020 -0.072	40.0	+0.08 -0.08	5.7	6.3	482750_
35	-0.025 -0.087	43.0	+0.08 -0.08	5.7	6.3	478980_
35	-0.025 -0.087	45.0	+0.08 -0.08	10.0	11.0	481610_
36	-0.025 -0.087	44.0	+0.08 -0.08	8.0	9.0	472620_
40	-0.025 -0.087	48.0	+0.08 -0.08	5.7	6.3	478990_
40	-0.025 -0.087	48.0	+0.08 -0.08	8.2	9.0	479000_
40	-0.025 -0.087	50.0	+0.08 -0.08	7.3	8.0	480630_
40	-0.025 -0.087	50.0	+0.08 -0.08	8.2	9.0	479010_
40	-0.025 -0.087	50.0	+0.08 -0.08	10.0	11.0	455340_
45	-0.025 -0.087	55.0	+0.09 -0.09	7.3	8.0	479020_

Ød1	TOL f9	ØD1	TOL Js11	SL	L1 +0.25-0	PART No.
45	-0.025 -0.087	55.0	+0.09 -0.09	10.3	11.0	472630_
50	-0.025 -0.087	57.0	+0.09 -0.09	9.0	10.0	478740_
50	-0.025 -0.087	58.0	+0.09 -0.09	8.2	9.0	479030_
50	-0.025 -0.087	60.0	+0.09 -0.09	7.3	8.0	472640_
50	-0.025 -0.087	60.0	+0.09 -0.09	10.0	11.0	481440_
50	-0.025 -0.087	65.0	+0.09 -0.09	11.4	12.5	480640_
55	-0.030 -0.104	65.0	+0.09 -0.09	10.0	11.0	479890_
55	-0.030 -0.104	67.0	+0.09 -0.09	10.0	11.0	479380_
56	-0.030 -0.104	66.0	+0.09 -0.09	10.0	11. 0	472650_
60	-0.030 -0.104	68.0	+0.09 -0.09	8.0	9.0	481690_
60	-0.030 -0.104	70.0	+0.09 -0.09	7.3	8.0	482260_
60	-0.030 -0.104	70.0	+0.09 -0.09	10.0	11.0	472660_
60	-0.030 -0.104	75.0	+0.09 -0.09	11.4	12.5	480650_
65	-0.030 -0.104	75.0	+0.09 -0.09	11.8	13.0	479040_
65	-0.030 -0.104	80.0	+0.11 -0.11	11.4	13.0	472670_
70	-0.030 -0.104	85.0	+0.11 -0.11	11.4	13.0	479050_
75	-0.030 -0.104	95.0	+0.11 -0.11	14.5	16.0	480900_
80	-0.030 -0.104	90.0	+0.11 -0.11	11.8	13.0	476140_
80	-0.030 -0.104	100.0	+0.11 -0.11	14.5	16.0	480660_
85	-0.036 -0.123	100.0	+0.11 -0.11	11.8	13.0	480670_

Hallite
Fenner Advanced Sealing Technologies

OTP®

714M

Technical details

	Metric		Inch	
Operating conditions				
Maximum Speed	2.0 m/sec		6.0 ft/sec	
Temperature Range	-40°C + 110°C		-40°F + 230°F	
Maximum Pressure	500 bar		7500 p.s.i.	
Maximum extrusion gap	**Figures show the maximum permissible gap all on one side using minimum rod Ø and maximum clearance Ø. Refer to Housing Design section**			
Pressure bar	500			
Groove Section S mm	5.5	7.75	10.5	12.25
Maximum Gap mm	0.6	0.8	1.1	1.2
Pressure p.s.i.	7,500			
Surface roughness	µmRa	µmRt	µinCLA	µinRMS
Dynamic Sealing Face $ØD_1$	0.1 <> 0.4	4 max	4 <> 16	5<> 18
Static Sealing Face $Ød_1$	1.6 max	10 max	63 max	70 max
Static Housing Faces L_1	3.2 max	16 max	125 max	140 max
Chamfers & Radii				
Groove Section S mm	5.5	7.75	10.5	12.25
Min Chamfer C mm	4	6	8	10
Max Fillet Rad r_1 mm	0.4	0.8	0.8	0.8
Port Diameter	If the seal is to pass over the port			
Max ØH mm	L_1x 0.85			
Tolerances	$ØD_1$	$Ød_1$	L_1	
mm	H9	h9	+0.2 -0	

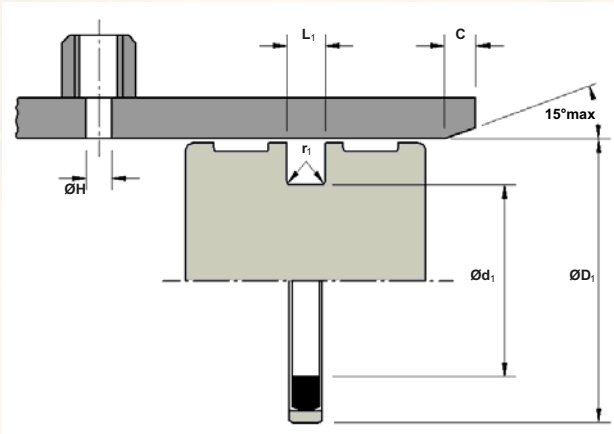

Design

The Hallite 714 is a double acting seal capable of passing over ports. The reinforced, heat stabilised, thermoplastic sealing face, expands and contracts to fill the gap between the piston and the cylinder wall and has a step-cut joint for ease of installation.
It will tolerate a considerable extrusion gap, thus reducing the possibility of piston-to-bore contact, and it offers excellent static load holding capability.
The special profile nitrile rubber energiser responds quickly to pressure changes, providing excellent sealing characteristcs under all pressure conditions. Additionally, the profiled energizer allows for easier installation when compared with a traditional square cut energizer while providing better stability in the groove.

NB: Part numbers suffixed by "‡" indicate housing sizes to meet ISO 7425-1.

Material Options

Please contact your local Hallite sales office for additional information

Features

- **Face expands for easy installation**
- **Passes over ports**
- **Excellent wear & abrasion resistance**
- **Runs on SSID tube**
- **Static load holding capability**
- **Replaces multiple piston rings**
- **Increases cylinder effectiveness**

714M

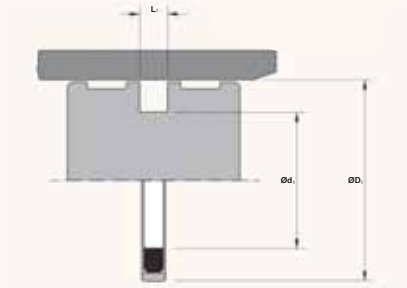

ØD1	TOL H9	Ød1	TOL h9	L1 + 0.2 - 0	PART No.
40	+0.06 +0.00	29.0	+0.000 -0.052	4.2	7270510‡
50	+0.06 +0.00	34.5	+0.000 -0.062	6.3	7272310‡
50	+0.06 +0.00	39.0	+0.000 -0.062	4.2	7270810‡
60	+0.07 +0.00	49.0	+0.000 -0.062	4.2	7270910
63	+0.07 +0.00	47.5	+0.000 -0.062	6.3	7272410‡
70	+0.07 +0.00	54.5	+0.000 -0.074	6.3	7273710
70	+0.07 +0.00	59.0	+0.000 -0.074	4.2	7271310
75	+0.07 +0.00	54.0	+0.000 -0.074	8.1	7273010
75	+0.07 +0.00	59.5	+0.000 -0.074	6.3	7271410
80	+0.07 +0.00	59.0	+0.000 -0.074	8.1	7273310‡
80	+0.07 +0.00	64.5	+0.000 -0.074	6.3	7270010‡
85	+0.09 +0.00	64.0	+0.000 -0.074	8.1	7273110
90	+0.09 +0.00	69.0	+0.000 -0.074	8.1	7273210
90	+0.09 +0.00	74.5	+0.000 -0.074	6.3	7271610
95	+0.09 +0.00	74.0	+0.000 -0.074	8.1	7273510
100	+0.09 +0.00	79.0	+0.000 -0.074	8.1	7273810
100	+0.09 +0.00	84.5	+0.000 -0.087	6.3	7271810‡
105	+0.09 +0.00	84.0	+0.000 -0.087	8.1	7272910
110	+0.09 +0.00	89.0	+0.000 -0.087	8.1	7273410
115	+0.09 +0.00	94.0	+0.000 -0.087	8.1	7273910
120	+0.09 +0.00	99.0	+0.000 -0.087	8.1	7272010
125	+0.10 +0.00	104.0	+0.000 -0.087	8.1	7272110‡
125	+0.10 +0.00	109.5	+0.000 -0.087	6.3	7272810‡
130	+0.10 +0.00	109.0	+0.000 -0.087	8.1	7274010
140	+0.10 +0.00	119.0	+0.000 -0.087	8.1	7272210
150	+0.10 +0.00	129.0	+0.000 -0.100	8.1	7274110
160	+0.10 +0.00	139.0	+0.000 -0.100	8.1	7272510‡
180	+0.10 +0.00	159.0	+0.000 -0.100	8.1	7272610
190	+0.12 +0.00	169.0	+0.000 -0.100	8.1	7274210
200	+0.12 +0.00	179.0	+0.000 -0.100	8.1	7272710‡
220	+0.12 +0.00	199.0	+0.000 -0.115	8.1	7274310
250	+0.12 +0.00	229.0	+0.000 -0.115	8.1	7273610‡
280	+0.13 +0.00	255.5	+0.000 -0.130	8.1	7274410

Hallite
Fenner Advanced Sealing Technologies

OTP®

730

Technical details

	Metric			Inch	
Operating conditions					
Maximum Speed	0.3 m/sec			1.0 ft/sec	
Temperature Range	-40°C +110°C			-40°F + 230°F	
Maximum Pressure	700 bar			10,000 p.s.i.	

Maximum extrusion gap

Figures show the maximum permissible gap all on one side using minimum rod Ø and maximum clearance Ø. Refer to Housing Design section

Pressure bar	160	250	500	700
Maximum Gap mm	1.00	0.80	0.40	0.25
Pressure p.s.i.	2400	3750	7500	10,000

Surface roughness	µmRa	µmRt	µinCLA	µinRMS
Dynamic Sealing Face $ØD_1$	0.1 <> 0.4	4 max	4 <> 16	5 <> 18
Static Sealing Face $Ød_1$	1.6 max	10 max	63 max	70 max
Static Housing Faces L_1	3.2 max	16 max	125 max	140 max

Chamfers & Radii				
Groove Section ≤ S mm	7.5	10.0	12.5	15.0
Min Chamfer C mm	8.0	10.0	13.0	15.0
Max Fillet Rad r_1 mm	0.2	0.4	0.8	0.8

Tolerances	$ØD_1$	$Ød_1$	L_1
mm	H10	h9	+0.2 -0

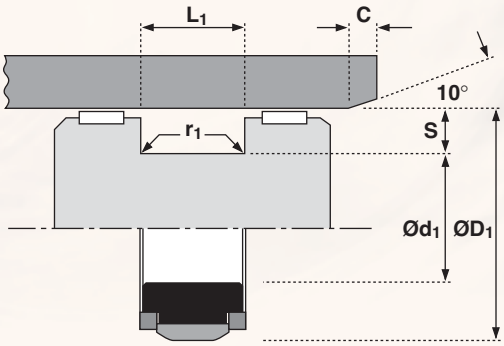

Design

The Hallite 730 is a top of the range double acting piston seal. It is constructed with a tough wear resistant thermoplastic polyester elastomer (TPE) face, which is loaded by a profiled nitrile energiser. Material options can be provided for the sealing face, including lubricated polyester and PTFE. All designs have rectangular polyacetal anti-extrusion rings. The TPE face material is suitable for both roller-burnished and honed tubing.

N.B. For installation of the Hallite 730 refer to guide on page 198.

Features

- **High shock load capability**
- **High pressure capability**
- **Proven on both roller-burnished and honed tubing**

730

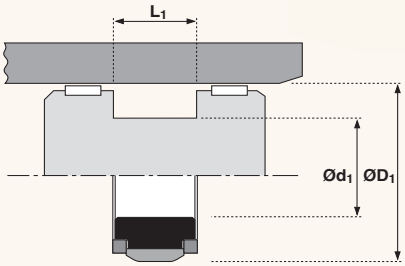

ØD1	TOL H10	Ød1	TOL h9	L1 +0.2 -0	PART No.
50	+0.10 +0.00	38	+0.00 -0.06	11.5	2335410
60	+0.12 +0.00	44	+0.00 -0.06	20.5	2356710
63	+0.12 +0.00	50	+0.00 -0.06	14.5	2331210
75	+0.12 +0.00	55	+0.00 -0.07	23.0	2346420
80	+0.12 +0.00	66	+0.00 -0.07	17.0	2330310
90	+0.14 +0.00	75	+0.00 -0.07	13.5	2331310
90	+0.14 +0.00	76	+0.00 -0.07	16.0	2364810
100	+0.14 +0.00	82	+0.00 -0.09	22.5	2331410
100	+0.14 +0.00	85	+0.00 -0.09	12.5	2342910*
100	+0.14 +0.00	85	+0.00 -0.09	13.5	2335010
100	+0.14 +0.00	86	+0.00 -0.09	22.5	2359710
105	+0.14 +0.00	80	+0.00 -0.09	22.5	2346710
105	+0.14 +0.00	91	+0.00 -0.09	16.5	2348210
110	+0.14 +0.00	95	+0.00 -0.09	12.5	2343010*
110	+0.14 +0.00	95	+0.00 -0.09	16.0	2331610
115	+0.14 +0.00	90	+0.00 -0.09	21.0	2329110
115	+0.14 +0.00	97	+0.00 -0.09	22.5	2356110
115	+0.14 +0.00	100	+0.00 -0.09	16.0	2329210
120	+0.14 +0.00	105	+0.00 -0.09	16.0	2337410
125	+0.16 +0.00	110	+0.00 -0.09	15.8	2331510
130	+0.16 +0.00	113	+0.00 -0.09	12.5	2339110*
130	+0.16 +0.00	113	+0.00 -0.09	20.5	2369010
135	+0.16 +0.00	118	+0.00 -0.09	20.5	2348110

ØD1	TOL H10	Ød1	TOL h9	L1 +0.2 -0	PART No.
135	+0.16 +0.00	120	+0.00 -0.09	16.0	2334010
140	+0.16 +0.00	123	+0.00 -0.10	16.0	2357910
140	+0.16 +0.00	125	+0.00 -0.10	16.0	2329410
150	+0.16 +0.00	130	+0.00 -0.10	16.0	2339010
150	+0.16 +0.00	133	+0.00 -0.10	20.0	2360510
150	+0.16 +0.00	135	+0.00 -0.10	16.0	2338210
160	+0.16 +0.00	143	+0.00 -0.10	20.0	2365510
160	+0.16 +0.00	145	+0.00 -0.10	16.0	2331910
165	+0.16 +0.00	145	+0.00 -0.10	20.0	2348910
165	+0.16 +0.00	150	+0.00 -0.10	16.0	2332010
170	+0.16 +0.00	145	+0.00 -0.10	25.0	2345510
170	+0.16 +0.00	150	+0.00 -0.10	16.0	2331110
175	+0.16 +0.00	155	+0.00 -0.10	16.0	2335110
180	+0.16 +0.00	160	+0.00 -0.10	16.0	2328510
180	+0.16 +0.00	163	+0.00 -0.10	20.0	2365210
185	+0.19 +0.00	165	+0.00 -0.10	16.0	2328410
185	+0.19 +0.00	165	+0.00 -0.10	20.0	2364010
190	+0.19 +0.00	170	+0.00 -0.10	16.0	2332210
195	+0.19 +0.00	175	+0.00 -0.10	16.0	2334710
200	+0.19 +0.00	180	+0.00 -0.10	16.0	2329310
200	+0.19 +0.00	180	+0.00 -0.10	20.0	2348810
200	+0.19 +0.00	183	+0.00 -0.12	20.0	2365010
210	+0.19 +0.00	190	+0.00 -0.12	16.0	2332410

730

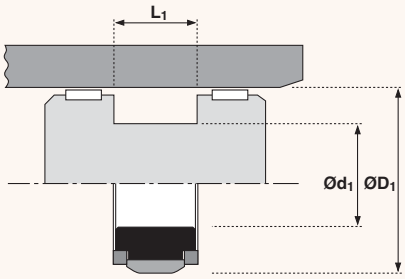

ØD1	TOL H10	Ød1	TOL h9	L1 +0.2 -0	PART No.
210	+0.19 +0.00	190	+0.00 -0.12	20.0	2364710
215	+0.19 +0.00	195	+0.00 -0.12	16.0	2332510
215	+0.19 +0.00	195	+0.00 -0.12	20.0	2345110
220	+0.19 +0.00	195	+0.00 -0.12	16.0	2345810
220	+0.19 +0.00	195	+0.00 -0.12	22.0	2333920
220	+0.19 +0.00	195	+0.00 -0.12	25.0	2333910
220	+0.19 +0.00	200	+0.00 -0.12	20.5	2356510
224	+0.19 +0.00	204	+0.00 -0.12	20.5	2348510
225	+0.19 +0.00	205	+0.00 -0.12	16.0	2332610
225	+0.19 +0.00	205	+0.00 -0.12	20.0	2346810
230	+0.19 +0.00	210	+0.00 -0.12	16.0	2332710
230	+0.19 +0.00	210	+0.00 -0.12	20.0	2344510
240	+0.19 +0.00	215	+0.00 -0.12	25.0	2333010
240	+0.19 +0.00	220	+0.00 -0.12	25.0	2364310
245	+0.19 +0.00	220	+0.00 -0.12	25.0	2328810
250	+0.19 +0.00	225	+0.00 -0.12	25.0	2348310
255	+0.19 +0.00	230	+0.00 -0.12	25.0	2348320
260	+0.21 +0.00	230	+0.00 -0.12	30.0	2347810
260	+0.21 +0.00	235	+0.00 -0.12	25.0	2347910
275	+0.21 +0.00	250	+0.00 -0.12	25.0	2362210
280	+0.21 +0.00	255	+0.00 -0.13	25.0	2333510
285	+0.21 +0.00	260	+0.00 -0.13	25.0	2362410
290	+0.21 +0.00	265	+0.00 -0.13	27.0	2364410
300	+0.21 +0.00	275	+0.00 -0.13	25.0	2333610
305	+0.21 +0.00	280	+0.00 -0.13	25.0	2333630
310	+0.21 +0.00	285	+0.00 -0.13	25.0	2333710
320	+0.23 +0.00	290	+0.00 -0.13	30.0	2348010
340	+0.23 +0.00	310	+0.00 -0.13	30.0	2366010
345	+0.23 +0.00	315	+0.00 -0.13	30.0	2363610
350	+0.23 +0.00	320	+0.00 -0.14	30.0	2345410
360	+0.23 +0.00	330	+0.00 -0.14	30.0	2345430
360	+0.23 +0.00	330	+0.00 -0.14	31.5	2365410
370	+0.23 +0.00	340	+0.00 -0.14	30.0	2362710
380	+0.23 +0.00	350	+0.00 -0.14	32.0	2362110
390	+0.23 +0.00	360	+0.00 -0.14	32.0	2362120
400	+0.23 +0.00	370	+0.00 -0.14	32.0	2359810
410	+0.25 +0.00	380	+0.00 -0.14	32.0	2359820
420	+0.25 +0.00	390	+0.00 -0.14	32.0	2366410
440	+0.25 +0.00	410	+0.00 -0.16	32.0	2365910
450	+0.25 +0.00	410	+0.00 -0.16	32.0	2390510
500	+0.25 +0.00	470	+0.00 -0.16	32.0	2369410

Installation guide for Hallite 730 Piston Seal

PLEASE NOTE!
Before installation of the seals onto the piston check that the piston is free of dirt and sharp edges. Sharp edged tools which could damage the seal during installation must not be used.

INSTALLATION
The rubber energizer must be installed first. It can be pulled over the piston with a circling movement, using a plastic strip for the stretching. The energizer should then be positioned in the centre of the groove, with a clearance either side. The first AE-ring is fitted next. It must be positioned opposite the installation side for the TPE face. This is fitted over the NBR energiser using the plastic installation strip. Please note that the TPE face ring needs to be installed directly against the AE ring. This can easily be achieved by circling movements with the fitting strap. The second AE ring can now be snapped on.

To provide the necessary seal interference, the seal will be considerably larger than the piston diameter. The assembly chamfer on the cylinder tube should be as long and flat as possible. Ensure that all edges are deburred and that the intersection points of the assembly chamfers with the bore are smoothly rounded.

Before the cylinders are assembled, the seal surface should be well greased. The grease also helps the seal to slip into the tube easily. For tubes longer than 800 mm the bore needs to be greased as well.

PLEASE NOTE!
The surface between energizer and face-ring must be kept free of grease.

For T730 with nominal groove lengths above 16 mm an installation sleeve is required (this can also be helpful for groove lengths up to 16 mm). This sleeve is needed to extend the assembly chamfer. A slope angle between 7° and 10° is required to prevent the face ring taking up a conical shape that will allow the rear AE-ring to slip under the TPE face ring.

The installation sleeve should be machined from a suitable plastic (such as polyacetal or polyamide). It can be made as a one piece design or as two half shells.

When automatic screwing equipment is used for the installation of the associated gland the maximum surface speed of the seal with respect to the bore must not exceed 0.1 m/s.

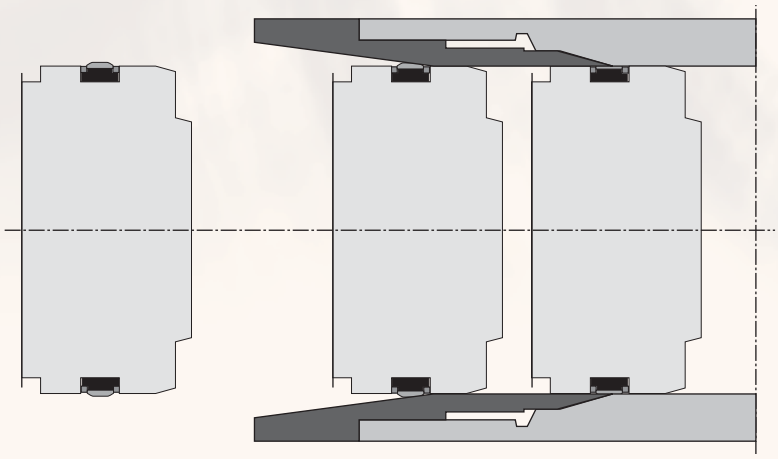

Hallite
Fenner Advanced Sealing Technologies

OTP®

735

Technical details

	Metric		Inch	
Operating conditions				
Maximum Speed	1.5 m/sec		4.5 ft/sec	
Temperature Range	-40°C +120°C		-40°F +250°F	
Maximum Pressure	500 bar		7500 p.s.i.	
Maximum extrusion gap	**Figures show the maximum permissible gap all on one side using minimum rod Ø and maximum clearance Ø. Refer to Housing Design section**			
Pressure bar	160	250	400	500
Maximum Gap mm	1.0	0.8	0.6	0.5
Pressure p.s.i.	2400	3750	6000	7500
Maximum Gap in	0.040	0.030	0.024	0.020
Surface roughness	µmRa	µmRt	µinCLA	µinRMS
Dynamic Sealing Face $ØD_1$	0.1 <> 0.4	4 max	4 <> 16	5 <> 18
Static Sealing Face $Ød_1$	1.6 max	10 max	63 max	70 max
Static Housing Faces L_1	3.2 max	16 max	125 max	140 max
Chamfers & Radii				
Groove Section ≤ S mm	7.0	7.5	11.5	14.0
Min Chamfer C mm	4.0	5.0	7.0	8.0
Max Fillet Rad r_1 mm	0.8	0.8	0.8	0.8
Groove Section ≤ S in	0.187	0.240	0.365	0.470
Min Chamfer C in	0.160	0.200	0.250	0.280
Max Fillet Rad r_1 in	0.016	0.016	0.032	0.032
Tolerances	$ØD_1$	$Ød_1$	L_1	
mm	H9	+0 -0.2	+0.2 -0	
in	H9	*see below	+0.01 -0	
$ØD_1$ in	≤ 3.000	≤ 4.500	> 4.500	
$Ød_1$ Tol	+0 – 0.002	+0 – 0.003	+0 – 0.004	

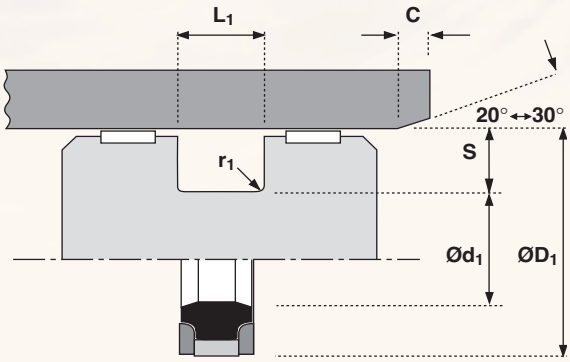

Materials

Please ensure the correct part number is used for the required cap ring.

PTFE, 40% bronze
Last digit of part no. _ _ _ _ _ _ **0**

or

PTFE, 15% glass 5% MoS2
Last digit of part no. _ _ _ _ _ _ **1**

Products suffixed † are designed to suit popular Asian housings

For information about other material options available, please contact your local Hallite Seals office.

Design

Hallite 735 is a compact double acting piston seal assembly designed for one piece pistons and is suitable for low to high pressure, medium to heavy duty applications. The assembly comprises as standard a self lubricating wear resistant bronze filled or glass / MoS2 filled PTFE cap ring, which is loaded by a NBR energiser. Thermoplastic split anti-extrusion rings support the seal on both sides and prevent contamination of the the energiser and cap ring.

Hallite's 735 piston seal is designed to be used in a variety of equipment and is particularly suited to use in earthmoving and other off-highway equipment.

The range consists of seals to suit popular North American and Asian housings.

Features

- **High pressure**
- **Heavy duty**
- **PTFE cap ring**
- **Compact design**
- **Low friction**
- **Long life**
- **Range of material options to extend service temperature range**

735

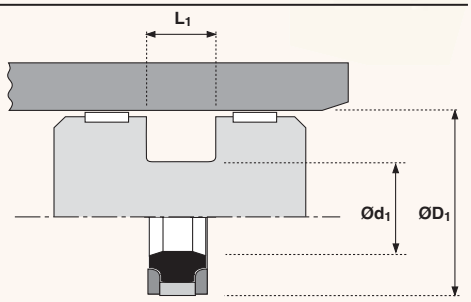

ØD1	TOL H9	Ød1 +0.0 -0.2	L1 +0.2 -0 .0	PART No.
50	+0.06 +0.00	36	9.0	715100_†
60	+0.07 +0.00	46	9.0	715150_†
63	+0.07 +0.00	48	11.0	715200_†
65	+0.07 +0.00	50	11.0	715250_†
70	+0.07 +0.00	55	11.0	715300_†
75	+0.07 +0.00	60	11.0	715350_†
80	+0.07 +0.00	65	11.0	715400_†
85	+0.09 +0.00	70	11.0	715450_†
90	+0.09 +0.00	75	11.0	715500_†
95	+0.09 +0.00	80	11.0	715550_†
100	+0.09 +0.00	85	12.5	715600_†
105	+0.09 +0.00	90	12.5	715650_†
110	+0.09 +0.00	95	12.5	715700_†
115	+0.09 +0.00	100	12.5	715750_†
120	+0.09 +0.00	105	12.5	715800_†
125	+0.10 +0.00	102	16.0	715850_†
130	+0.10 +0.00	107	16.0	715900_†
135	+0.10 +0.00	112	16.0	715950_†
140	+0.10 +0.00	117	16.0	716000_†
145	+0.10 +0.00	122	16.0	716050_†
150	+0.10 +0.00	127	16.0	716100_†
160	+0.10 +0.00	137	16.0	716150_†

ØD1	TOL H9	Ød1 +0.0 -0.2	L1 +0.2 -0 .0	PART No.
165	+0.10 +0.00	142	16.0	716200_†
170	+0.10 +0.00	147	16.0	716250_†
175	+0.10 +0.00	152	16.0	716280_†
180	+0.10 +0.00	157	16.0	716300_†
185	+0.12 +0.00	162	16.0	716350_†
190	+0.12 +0.00	167	16.0	716400_†
200	+0.12 +0.00	177	16.0	716450_†
210	+0.12 +0.00	187	16.0	716500_†
215	+0.12 +0.00	192	16.0	716530_†
220	+0.12 +0.00	197	16.0	716550_†
225	+0.12 +0.00	202	16.0	716600_†
230	+0.12 +0.00	207	16.0	716650_†
240	+0.12 +0.00	217	16.0	716700_†
250	+0.12 +0.00	222	17.5	716750_†
260	+0.13 +0.00	232	17.5	716800_†
270	+0.13 +0.00	242	17.5	716820_†
280	+0.13 +0.00	252	17.5	716840_†
290	+0.13 +0.00	262	17.5	716850_
300	+0.13 +0.00	272	17.5	716870_†
320	+0.13 +0.00	292	17.5	716890_†
330	+0.13 +0.00	302	17.5	716910_†
350	+0.14 +0.00	322	17.5	716950_†

735

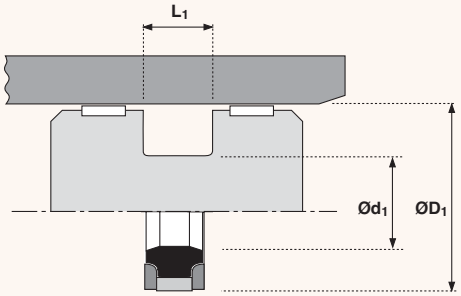

ØD1	TOL H9	Ød1 +0.0 -0.2	L1 +0.2 -0 .0	PART No.
400	+0.14 +0.00	372	17.5	716990_†

ØD1	TOL H9	Ød1 +0.0 -0.2	L1 +0.2 -0 .0	PART No.

Hallite
Fenner Advanced Sealing Technologies

OTP®

753

Technical details

	Metric			Inch	
Operating conditions					
Maximum Speed	0.5 m/sec			1.5 ft/sec	
Temperature Range	-30°C +100°C			-22°F +212°F	
Maximum Pressure	400 bar			6000 p.s.i.	
Surface roughness	µmRa		µmRt	µinCLA	µinRMS
Dynamic Sealing Face $ØD_1$	0.1 <> 0.4		4 max	4 <> 16	5 <> 18
Static Sealing Face $Ød_1$ $Ød_2$	1.6 max		10 max	63 max	70 max
Static Housing Faces $Ød_3$ L_1 L_2	3.2 max		16 max	125 max	140 max

Chamfers & Radii						
Groove Section ≤ S mm	5.0	7.5	8.0	10.0	12.5	15.0
Min Chamfer C mm	4.0	4.0	5.0	5.0	6.5	7.5
Max Chamfer C_1 mm	0.4	0.4	0.4	0.4	0.8	0.8
Max Fillet Rad r_1 mm	0.2	0.2	0.4	0.4	0.4	0.8
Max Fillet Rad r_2 mm	0.2	0.2	0.2	0.2	0.2	0.4
Tolerances	$ØD_1$	$Ød_1$	$Ød_2$	$Ød_3$	L_1	L_2
mm	H11	h10	f9	h11	+0.4-0	+0.1 -0

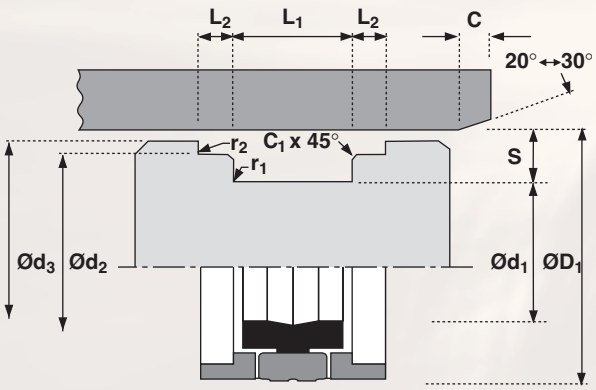

Profile A

Profile B

Hallite 753 is manufactured using two different profiles as illustrated above. The parts list clearly indicates which profile is used for each size.

Design

The Hallite 753 is a compact assembly designed and developed specifically for one piece pistons.

The assembly comprises a wear-resistant polyurethane slip ring which is loaded by an NBR ring. There are split 'L' shaped anti-extrusion bearings made from polyacetal resin on both sides of the seal.

The proportions of the range have been determined to give a satisfactory performance when used with the recommended operating conditions.

Features

- **Long life due to the wear-resistant polyurethane slip rings**
- **Easy installation**

753

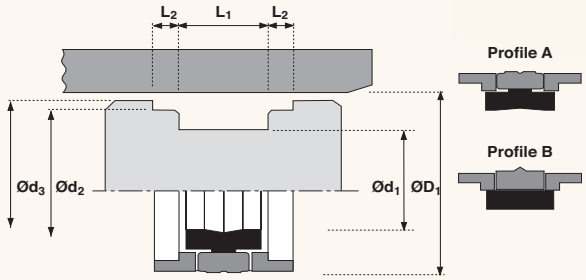

$ØD_1$	TOL H11	$Ød_1$	TOL h10	$Ød_2$	TOL f9	$Ød_3$	TOL h11	L_1 + 0.4	L_2 + 0.1 - 0	PROFILE	PART No.
40	+0.16 +0.00	26	+0.000 -0.084	36.00	-0.025 -0.087	39.00	+0.00 -0.16	15.5	2.60	B	6916500
40	+0.16 +0.00	30	+0.000 -0.084	36.50	-0.025 -0.087	39.00	+0.00 -0.16	10.0	5.00	A	6915100*
45	+0.16 +0.16	31	+0.000 -0.100	41.00	-0.025 -0.087	44.00	+0.00 -0.16	15.5	2.60	B	6914500
50	+0.16 +0.00	34	+0.000 -0.100	46.00	-0.025 -0.087	49.00	+0.00 -0.16	20.5	3.10	B	6916600
50	+0.16 +0.00	34	+0.000 -0.100	45.40	-0.025 -0.087	48.50	+0.00 -0.16	18.4	6.35	A	6915200
55	+0.19 +0.00	39	+0.000 -0.100	51.00	-0.030 -0.104	54.00	+0.00 -0.19	20.5	3.10	B	6914600
60	+0.19 +0.00	44	+0.000 -0.100	56.00	-0.030 -0.104	58.50	+0.00 -0.19	20.5	3.10	A	6916300
60	+0.19 +0.00	44	+0.000 -0.100	55.40	-0.030 -0.104	58.50	+0.00 -0.19	18.4	6.35	A	8672110
63	+0.19 +0.00	47	+0.000 -0.100	58.40	-0.030 -0.104	61.50	+0.00 -0.19	18.4	6.35	A	6915300
63	+0.19 +0.00	47	+0.000 -0.100	59.00	-0.030 -0.104	62.00	+0.00 -0.19	20.5	3.10	A	6916100
65	+0.19 +0.00	49	+0.000 -0.100	61.00	-0.030 -0.104	64.00	+0.00 -0.19	20.5	3.10	B	6916700
70	+0.19 +0.00	50	+0.000 -0.100	64.20	-0.030 -0.104	68.30	+0.00 -0.19	22.4	6.35	A	6915400
70	+0.19 +0.00	54	+0.000 -0.120	66.00	-0.030 -0.104	69.00	+0.00 -0.19	20.5	3.10	B	6916800
75	+0.19 +0.00	59	+0.000 -0.120	71.00	-0.030 -0.104	74.00	+0.00 -0.19	20.5	3.10	B	6918650
80	+0.19 +0.00	60	+0.000 -0.120	74.15	-0.030 -0.104	78.30	+0.00 -0.19	22.4	6.35	A	6915500
80	+0.19 +0.00	62	+0.000 -0.120	76.00	-0.030 -0.104	79.00	+0.00 -0.19	22.5	3.60	B	6916400
90	+0.22 +0.00	70	+0.000 -0.120	84.15	-0.036 -0.123	88.30	+0.00 -0.22	22.4	6.35	A	6915600
90	+0.22 +0.00	72	+0.000 -0.120	86.00	-0.036 -0.123	89.00	+0.00 -0.22	22.5	3.60	B	6916900
100	+0.22 +0.00	75	+0.000 -0.120	93.15	-0.036 -0.123	98.00	+0.00 -0.22	22.4	6.35	A	6915700
100	+0.22 +0.00	82	+0.000 -0.120	93.15	-0.036 -0.123	98.00	+0.00 -0.22	22.5	3.60	B	6918660
110	+0.22 +0.00	85	+0.000 -0.140	103.10	-0.036 -0.123	108.00	+0.00 -0.22	22.4	6.35	A	6915800
110	+0.22 +0.00	92	+0.000 -0.140	106.00	-0.036 -0.123	109.00	+0.00 -0.22	22.5	3.60	B	6914700
125	+0.25 +0.00	100	+0.000 -0.140	118.10	-0.036 -0.123	123.00	+0.00 -0.25	25.4	6.35	A	6915900

753

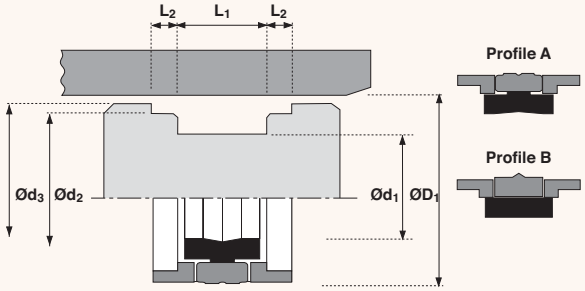

$ØD_1$	TOL H11	$Ød_1$	TOL h10	$Ød_2$	TOL f9	$Ød_3$	TOL h11	L_1 + 0.4	L_2 + 0.1 - 0	PROFILE	PART No.
125	+0.25 +0.00	103	+0.000 -0.140	121.00	-0.043 -0.143	124.00	+0.00 -0.25	26.5	5.10	B	6917000
140	+0.25 +0.00	118	+0.000 -0.140	136.00	-0.043 -0.143	139.00	+0.00 -0.25	26.5	5.10	A	2356010
150	+0.25 +0.00	128	+0.000 -0.160	146.00	-0.043 -0.143	149.00	+0.00 -0.25	26.5	5.10	A	2349910
160	+0.25 +0.00	138	+0.000 -0.160	156.00	-0.043 -0.143	159.00	+0.00 -0.25	26.5	5.10	A	2349810
165	+0.25 +0.00	143	+0.000 -0.160	161.00	-0.043 -0.143	164.00	+0.00 -0.25	26.5	5.10	A	2362310
180	+0.25 +0.00	158	+0.000 -0.160	176.00	-0.043 -0.143	179.00	+0.00 -0.25	26.5	5.10	A	2349510
200	+0.29 +0.00	175	+0.000 -0.160	196.00	-0.050 -0.165	199.00	+0.00 -0.29	31.5	6.60	A	2347010
250	+0.29 +0.00	220	+0.000 -0.185	242.90	-0.050 -0.165	247.85	+0.00 -0.29	35.4	6.35	A	2340710

* OWING TO THE SEAL SECTION, DIAMETER 40 IS MANUFACTURED USING ONLY 3 PARTS

Hallite
Fenner Advanced Sealing Technologies

OTP®

754

Technical details

	Metric			Inch
Operating conditions				
Maximum Speed	1.0 m/sec			3ft/sec
Temperature Range	-40°C +110°C			40°C+230°F
Maximum Pressure	350 bar- standard 55D material			5000 p.s.i
	500 bar- 72D material			7500 p.s.i

Maximum extrusion gap **Figures show the maximum permissible gap all on one side using maximum clearance Ø and maximum bore Ø. Refer to Housing Design section**

Polyester elastomer - standard (red 55D) material 9270061				
Pressure bar	100	160	250	350
Maximum Gap (S>7) mm	1.0	0.8	0.6	0.4
Maximum Gap (S<7) mm	0.8	0.6	0.5	0.3
Pressure p.s.i	1500	2400	3750	5000
Hydrolysis stabilised polyester elastomer (dark red 72D) material 9270051				
Pressure bar	160	250	400	500
Maximum Gap (S>7) mm	1.0	0.8	0.6	0.4
Maximum Gap (S<7) mm	0.8	0.6	0.4	0.2
Pressure p.s.i	2400	3750	6000	7500
Surface roughness	µmRa	µmRt	µinCLA	µinRMS
Dynamic Sealing Face ØD_1	0.1 <> 0.4	4 max	4 <> 16	5 <> 18
Static Sealing Face Ød_1	1.6 max	10 max	63 max	70 max
Static Housing Faces L_1	3.2 max	16 max	125 max	140 max
Chamfers & Radii				
Groove Section ≤ S mm	3.75	5.50	7.75	10.50
Min Chamfer C mm	2.00	2.50	5.00	5.00
Max Fillet Rad r_1 mm	0.40	0.80	1.20	1.60
Groove Section ≤ S in	0.150	0.220	0.310	0.410
Min Chamfer C in	0.080	0.100	0.200	0.200
Max Fillet Rad r_1 in	0.016	0.032	0.047	0.063
Tolerances	ØD_1	Ød_1	L_1mm	L_1 in
	H9	h9	+0.2 -0	+0.008-0

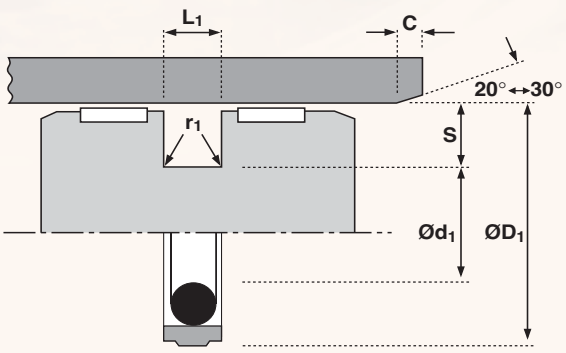

Features

- **Low break-out and operating friction levels**
- **Rapid recovery of face after assembly. Unlike common PTFE faces, no re-sizing is required**
- **More tolerant to contamination than common PTFE equivalents**
- **Excellent position holding characteristics under load**
- **Compatible with most hydraulic fluids**
- **Excellent wear resistance**
- **Operates on a wide range of surface finishes**
- **Ideal for use with Hallite 506 or 87 bearing strip**
- **ISO 7425 housings**

Design

The Hallite 754 double acting piston seal is a compact low friction seal for light to medium duty hydraulic cylinders. As standard, it comprises a tough, wear resistant thermoplastic elastomer face, (see below for face material options) which is pre-loaded by an O ring. The housing width allows a narrow width piston to be used, but it is recommended that an adequate bearing is mounted on one or both sides of the seal.

Housing dimensions for use with Hallite 87 and 506 bearing strip are given in the installation details. For further details of bearing strip grooves, please refer to the appropriate data sheets.

NB: Part numbers suffixed by "‡" indicate housing sizes to meet ISO 7425-1.

Material Options

Face material:
Polyster elastomer - standard Red 55D
Last digit of part no. _ _ _ _ _ _0

Hydrolysis stabilised polyester elastomer Dark Red 72D
Last digit of part no. _ _ _ _ _ _3

754

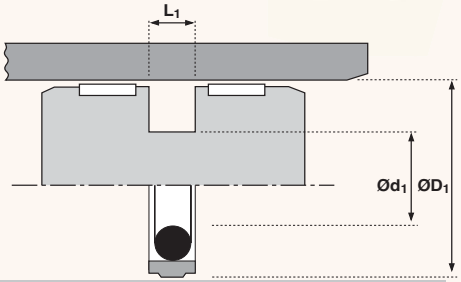

ØD1	TOL H9	Ød1	TOL h9	L1 + 0.2 - 0	PART No.
15	+0.04 +0.00	7.5	+0.000 -0.036	3.2	444641_
16	+0.04 +0.00	8.5	+0.000 -0.036	3.2	440061_‡
20	+0.05 +0.00	12.5	+0.000 -0.043	3.2	436231_‡
25	+0.05 +0.00	17.5	+0.000 -0.052	3.2	433961_‡
28	+0.05 +0.00	20.5	+0.000 -0.052	3.2	476591_
30	+0.05 +0.00	22.5	+0.000 -0.052	3.2	433971_
32	+0.06 +0.00	24.5	+0.000 -0.052	3.2	433981_‡
35	+0.06 +0.00	27.5	+0.000 -0.052	3.2	435241_
36	+0.06 +0.00	28.5	+0.000 -0.052	3.2	4787510
40	+0.06 +0.00	29.0	+0.000 -0.052	4.2	433921_‡
40	+0.06 +0.00	32.5	+0.000 -0.062	3.2	474001_‡
42	+0.06 +0.00	31.0	+0.000 -0.062	4.2	4787610
45	+0.06 +0.00	34.0	+0.000 -0.062	4.2	434231_
50	+0.06 +0.00	34.5	+0.000 -0.062	6.3	442741_‡
50	+0.06 +0.00	39.0	+0.000 -0.062	4.2	432711_‡
55	+0.07 +0.00	39.5	+0.000 -0.062	6.3	435561_
55	+0.07 +0.00	44.0	+0.000 -0.062	4.2	446551_
60	+0.07 +0.00	44.5	+0.000 -0.062	6.3	439071_
60	+0.07 +0.00	49.0	+0.000 -0.062	4.2	432701_
63	+0.07 +0.00	47.5	+0.000 -0.062	6.3	443111_‡
63	+0.07 +0.00	50.0	+0.000 -0.062	6.3	447231_
63	+0.07 +0.00	52.0	+0.000 -0.074	4.2	432691_‡
65	+0.07 +0.00	49.5	+0.000 -0.062	6.3	436201_
65	+0.07 +0.00	52.0	+0.000 -0.074	6.3	438491_
65	+0.07 +0.00	54.0	+0.000 -0.074	4.2	435301_
70	+0.07 +0.00	54.5	+0.000 -0.074	6.3	476341_
70	+0.07 +0.00	57.0	+0.000 -0.074	6.3	439081_
70	+0.07 +0.00	59.0	+0.000 -0.074	4.2	432681_
75	+0.07 +0.00	59.5	+0.000 -0.074	6.3	470491_
75	+0.07 +0.00	64.0	+0.000 -0.074	4.2	433991_
80	+0.07 +0.00	64.5	+0.000 -0.074	6.3	427091_‡
80	+0.07 +0.00	69.0	+0.000 -0.074	4.2	476851_‡
85	+0.09 +0.00	69.5	+0.000 -0.074	6.3	456401_
90	+0.09 +0.00	74.5	+0.000 -0.074	6.3	437271_
95	+0.09 +0.00	84.0	+0.000 -0.074	4.2	483161_
95	+0.09 +0.00	79.5	+0.000 -0.074	6.3	456951_
100	+0.09 +0.00	84.5	+0.000 -0.087	6.3	433931_‡
105	+0.09 +0.00	89.5	+0.000 -0.087	6.3	437251_
110	+0.09 +0.00	94.5	+0.000 -0.087	6.3	441931_
115	+0.09 +0.00	94.0	+0.000 -0.087	8.1	478851_
115	+0.09 +0.00	99.5	+0.000 -0.087	6.3	435581_
120	+0.09 +0.00	99.0	+0.000 -0.087	8.1	453501_
120	+0.09 +0.00	104.5	+0.000 -0.087	6.3	446541_
125	+0.10 +0.00	104.0	+0.000 -0.087	8.1	437651_‡
125	+0.10 +0.00	109.5	+0.000 -0.087	6.3	434001_‡
130	+0.10 +0.00	109.0	+0.000 -0.087	8.1	440241_

754

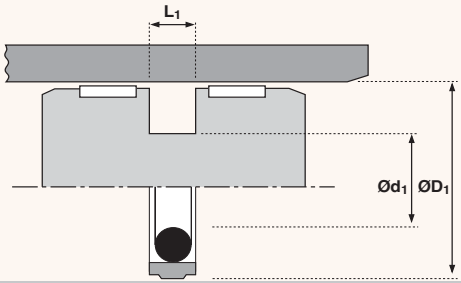

ØD1	TOL H9	Ød1	TOL h9	L1 + 0.2 - 0	PART No.
130	+0.10 +0.00	114.5	+0.000 -0.087	6.3	434221_
135	+0.10 +0.00	114.0	+0.000 -0.087	8.1	453511_
140	+0.10 +0.00	119.0	+0.000 -0.087	8.1	434011_
140	+0.10 +0.00	124.5	+0.000 -0.100	6.3	449941_
150	+0.10 +0.00	129.0	+0.000 -0.100	8.1	439691_
160	+0.10 +0.00	139.0	+0.000 -0.100	8.1	434021_‡
165	+0.10 +0.00	144.0	+0.000 -0.100	8.1	445221_
170	+0.10 +0.00	149.0	+0.000 -0.100	8.1	434031_
180	+0.10 +0.00	159.0	+0.000 -0.100	8.1	434041_

ØD1	TOL H9	Ød1	TOL h9	L1 + 0.2 - 0	PART No.
190	+0.12 +0.00	169.0	+0.000 -0.100	8.1	434241_
200	+0.12 +0.00	179.0	+0.000 -0.100	8.1	434051_‡
210	+0.12 +0.00	189.0	+0.000 -0.115	8.1	435151_
220	+0.12 +0.00	199.0	+0.000 -0.115	8.1	473571-
225	+0.12 +0.00	204.0	+0.000 -0.115	8.1	451281_
230	+0.12 +0.00	209.0	+0.000 -0.115	8.1	476401_
240	+0.12 +0.00	219.0	+0.000 -0.115	8.1	455361_
250	+0.12 +0.00	229.0	+0.000 -0.115	8.1	439371_‡
300	+0.13 +0.00	279.0	+0.000 -0.130	8.1	457281_

Hallite
Fenner Advanced Sealing Technologies

OTP®

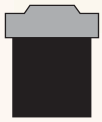

755

Technical details

	Metric		Inch	
Operating conditions				
Maximum Speed	1.0 m/sec		3.0 ft/sec	
Temperature Range	-40°C +110°C		-40°F +230°F	
Maximum Pressure	350 bar		5000 p.s.i.	
Maximum extrusion gap	**Figures show the maximum permissible gap all on one side using minimum rod Ø and maximum clearance Ø. Refer to Housing Design section**			
Pressure bar	100	160	250	350
Pressure p.s.i.	1500	2400	3750	5000
Maximum Gap (S>0.280) in	0.030	0.025	0.020	0.010
Maximum Gap (S<0.280) in	0.025	0.020	0.015	0.005
Surface roughness	µmRa	µmRt	µinCLA	µinRMS
Dynamic Sealing Face $ØD_1$	0.1 <> 0.4	4 max	4 <> 16	5 <> 18
Static Sealing Face $Ød_1$	1.6 max	10 max	63 max	70 max
Static Housing Faces L_1	3.2 max	16 max	125 max	140 max
Chamfers & Radii				
Groove Section ≤ S in	0.154	0.269	0.373	0.431
Min Chamfer C in	0.100	0.150	0.200	0.200
Max Fillet Rad r_1 in	0.016	0.016	0.016	0.016
Tolerances	$ØD_1$	$Ød_1$		
in	H9	js10		
$ØD_1$* ≥ in	1.000	3.000	5.250	
L_1	± 0.002	±0.003	±0.004	
NB	Part numbers 449002_ and 455352_ L_1 tol ±0.003			

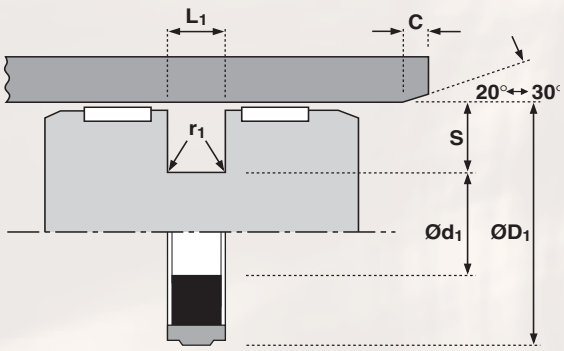

Materials

Standard face material:
Polyester elastomer – (red 55D)
Last digit of part no. _ _ _ _ _ _ **0**

Face material options:
Hydrolysis stabilised
polyester elastomer (Grey 55D)
Last digit of part no. _ _ _ _ _ _ **1**

Lubricated polyester elastomer
Last digit of part no. _ _ _ _ _ _ **2**

Hydrolysis stabilised
polyester elastomer (Red 72D)
Last digit of part no. _ _ _ _ _ _ **3**

Hythane 181 – A limited number of
sizes are available in this material option
Last digit of part no. _ _ _ _ _ _ **4**

Technical details shown are for standard Red 55D polyester elastomer.

Design

The Hallite 755 seal is a compact, low friction seal for light to medium duty hydraulic cylinders. Designed originally to the North American housing standards, the 755 is an inch version of Hallite's 754. It comprises a very tough elastomeric face (see material options) which is pre-loaded by a square section ring (as North American convention). Please note part numbers marked * are supplied with an O ring energiser.

It is recommended that an adequate bearing is mounted on both sides of the seal. See Hallite 506 bearing strip.

For full details and availability please contact your local Hallite sales office.

Features

- **Low break-out and operating friction levels.**
- **Rapid recovery of face after assembly. Unlike common PTFE faces, no re-sizing is required.**
- **More tolerant to dirt and contamination than common PTFE equivalents.**
- **Excellent position holding characteristics under load**
- **Compatible with most hydraulic fluids.**
- **Excellent wear resistance.**
- **Operates on a wide range of surface finishes.**
- **Ideal for use with Hallite's 506 bearing strip**

764

Technical details

	Metric		Inch	
Operating conditions				
Maximum Speed	1.0 m/sec		3.0 ft/sec	
Temperature Range	-30°C + 110°C		-22°F + 230°F	
Maximum Pressure	250 bar		3600 p.s.i.	
Maximum extrusion gap	**Figures show the maximum permissible gap all on one side using minimum rod Ø and maximum clearance Ø. Refer to Housing Design section**			
Pressure bar	100	160	250	
Maximum Gap mm	0.6	0.5	0.4	
Surface roughness	µmRa	µmRt	µinCLA	µinRMS
Dynamic Sealing Face $ØD_1$	0.1 <> 0.4	4 max	4 <> 16	5 <> 18
Static Sealing Face $Ød_1$	1.6 max	10 max	63 max	70 max
Static Housing Faces L_1	3.2 max	16 max	125 max	140 max
Chamfers & Radii				
Groove Section ≤S mm	3.75	5.50	7.75	10.50
Min Chamfer C mm	2.0	2.5	5.0	5.0
Max Fillet Rad r_1 mm	0.4	0.8	1.2	1.6
Groove Section ≤ S in	0.150	0.220	0.310	0.410
Min Chamfer C in	0.080	0.100	0.200	0.200
Max Fillet Rad r_1 in	0.016	0.032	0.047	0.063
Tolerances	$ØD_1$ H9	$Ød_1$ h9	L_1 mm +0.2 -0	L_1in +0.008-0

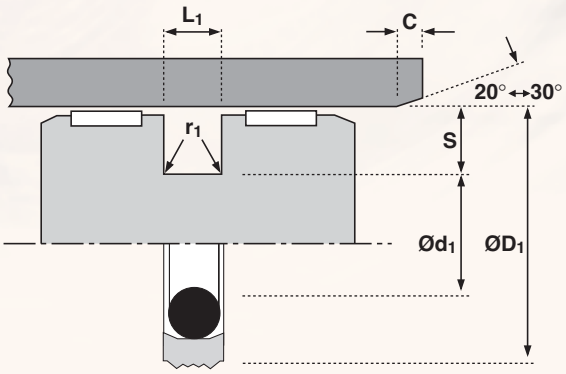

Features

- **Double acting seal with single acting capabilities**
- **Excellent wear resistance**
- **High extrusion resistance makes it ideal for use with remote wear rings such as the Hallite 506 or 87**
- **Advanced face geometry provides enhanced dynamic and static sealing**
- **More tolerant to dirt and contamination than common PTFE faces**
- **Rapid recovery after assembly, no resizing required**
- **ISO 7425 housings**

Design

The Hallite 764 is a compact seal for light to medium duty hydraulic cylinders. It is a double acting piston seal with single acting capabilities. This makes it an excellent choice for double acting applications where minimal dynamic leakage is required.

The Hallite 764 comprises of a tough elastomeric face that is pre-loaded by an O ring. The housing width allows a narrow width piston to be used, but it is recommended that an adequate bearing is mounted on one or both sides of the seal.

Housing dimensions for use with Hallite 87 and 506 bearing strip are given in the installation details. For further details on bearing strip grooves, please refer to the appropriate data sheets.

NB: Part numbers suffixed by "‡" indicate housing sizes to meet ISO 7425-1.

For full details and availability please contact your local Hallite Sales office.

764

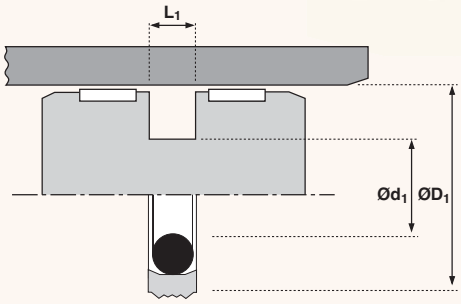

$ØD_1$	TOL H9	$Ød_1$	TOL h9	L_1 + 0.2 - 0	PART No.
22	+0.05 +0.00	14.5	-0.000 -0.043	3.20	4763610
32	+0.06 +0.00	24.5	-0.000 -0.052	3.20	4741010‡
32	+0.06 +0.00	21.0	-0.000 -0.052	4.20	4751210‡
35	+0.06 +0.00	24.0	-0.000 -0.052	4.20	4764110
40	+0.06 +0.00	29.0	-0.000 -0.052	4.20	4741110‡
45	+0.06 +0.00	34.0	-0.000 -0.062	4.20	4744510
50	+0.06 +0.00	39.0	-0.000 -0.062	4.20	4741210‡
50	+0.06 +0.00	34.5	-0.000 -0.062	6.30	4775810‡
60	+0.07 +0.00	49.0	-0.000 -0.062	4.20	4741310
60	+0.07 +0.00	44.5	-0.000 -0.062	6.30	4739910
63	+0.07 +0.00	47.5	-0.000 -0.062	6.30	4766810‡
63	+0.07 +0.00	52.0	-0.000 -0.074	4.20	4740810
70	+0.07 +0.00	59.0	-0.000 -0.074	4.20	4741410
70	+0.07 +0.00	54.5	-0.000 -0.074	6.30	4759710
80	+0.07 +0.00	64.5	-0.000 -0.074	6.30	4722210‡
90	+0.09 +0.00	74.5	-0.000 -0.074	6.30	4741510
100	+0.09 +0.00	84.5	-0.000 -0.087	6.30	4741610‡
115	+0.09 +0.00	99.5	-0.000 -0.087	6.30	4761610
115	+0.09 +0.00	94.0	-0.000 -0.087	8.10	4829910
120	+0.09 +0.00	99.0	-0.000 -0.087	8.10	4812010
125	+0.09 +0.00	109.5	-0.000 -0.087	6.30	4771710‡

Hallite
Fenner Advanced Sealing Technologies

OTP®

770

Technical details

	Metric		Inch	
Operating conditions				
Maximum Speed	1.0 m/sec		3.0 ft/sec	
Temperature Range	-40°C +110°C		-40°F +230°F	
Maximum Pressure	350 bar		5000 p.s.i.	
Maximum extrusion gap	**Figures show the maximum permissible gap all on one side using minimum rod Ø and maximum clearance Ø. Refer to Housing Design section**			
Pressure bar	100	160	250	350
Pressure p.s.i.	1500	2400	3750	5000
Maximum Gap in	0.030	0.025	0.020	0.010
Surface roughness	µmRa	µmRt	µinCLA	µinRMS
Dynamic Sealing Face $ØD_1$	0.1 <> 0.4	4 max	4 <> 16	5 <> 18
Static Sealing Face $Ød_1$	1.6 max	10 max	63 max	70 max
Static Housing Faces L_1	3.2 max	16 max	125 max	140 max
Chamfers & Radii				
Groove Section ≤ S mm	0.125	0.187	0.250	
Min Chamfer C in	0.100	0.150	0.200	
Max Fillet Rad r_1 in	0.016	0.016	0.016	
Tolerances	$ØD_1$	$Ød_1$	$Ød_2$	L_1
in	+0.002 -0	+0 -0.002	+0 -0.001	+0.005 -0

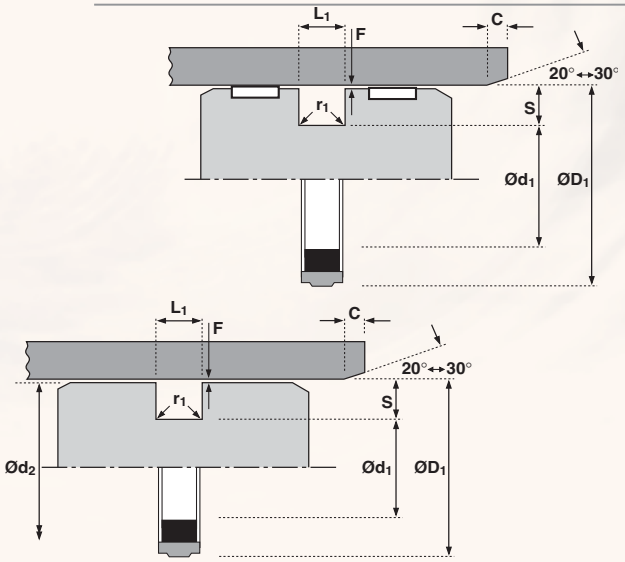

Materials

Standard face material: (Cream 55D)
Lubricated polyester elastomer
Last digit of part no. _ _ _ _ _ _ **2**

Face material options:
Polyester elastomer (Red 55D)
Last digit of part no. _ _ _ _ _ _ **0**

Hydrolysis stabilised
polyester elastomer (Grey 55D)
Last digit of part no. _ _ _ _ _ _ **1**

Hydrolysis stabilised
polyester elastomer (Red 72D)
Last digit of part no. _ _ _ _ _ _ **3**

Hythane 181 – A limited number of
sizes are available in this material option
Last digit of part no. _ _ _ _ _ _ **4**

Design

The Hallite 770 seal is a double acting compact, low friction seal for light to medium duty hydraulic cylinders. It has been designed to fit standard inch O ring housings. It comprises a tough self lubricated elastomeric face which is pre-loaded by a rectangular cross-section expander. It can be used on SG iron pistons or on a piston where there is an adequate remote bearing (see Hallite 506 and 533 bearings).

The standard material is only suitable for hydraulic mineral oil applications. Other material options are available for water based (HFA and HFB) fluids and synthetic esters (HEES). In certain sizes a Hythane face material option is available, particularly for intermittent single acting applications.

For full details and availability please contact your local Hallite Sales office.

Features

- **Low break-out and operating friction levels**
- **Rapid recovery of face after assembly. Unlike common PTFE faces, no re-sizing is required**
- **More tolerant to dirt and contamination than common PTFE equivalents**
- **Excellent wear resistance**
- **Operates on a wide range of surface finishes**
- **Ideal for use with Hallite 506 or 533 GFN wear rings**

Hallite
Fenner Advanced Sealing Technologies

OTP®

775

Technical details

	Metric			Inch	
Operating conditions					
Maximum Speed	1.0 m/sec			3.0 ft/sec	
Temperature Range	-30°C +110°C			-22°F +230°F	
Maximum Pressure	350 bar			5000 p.s.i.	

Maximum extrusion gap

Figures show the maximum permissible gap all on one side using minimum rod Ø and maximum clearance Ø. Refer to Housing Design section

Pressure bar	100	160	250	350
Pressure p.s.i.	1500	2400	3750	5000
Maximum Gap in	0.025	0.020	0.016	0.008

Surface roughness	µmRa	µmRt	µinCLA	µinRMS
Dynamic Sealing Face $ØD_1$	0.1 <> 0.4	4 max	4 <> 16	5 <> 18
Static Sealing Face $Ød_1$	1.6 max	10 max	63 max	70 max
Static Housing Faces L_1	3.2 max	16 max	125 max	140 max

Chamfers & Radii			
Groove Section ≤ S in	0.125	0.187	0.250
Min Chamfer C in	0.100	0.150	0.200
Max Fillet Rad r_1 in	0.016	0.016	0.016

Tolerances	$ØD_1$	$Ød_1$	$Ød_2$	L_1
in $ØD_1 \leq 2.500$	+0.002 -0	+0-0.002	+0-0.001	+0.005 -0
$ØD_1 > 2.500$	+0.004 -0	+0-0.004	+0-0.001	+0.005 -0

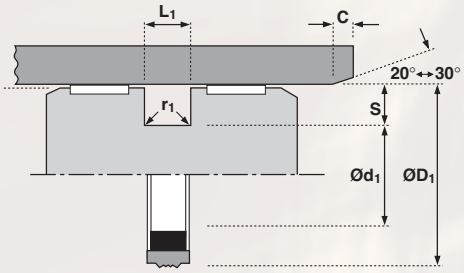

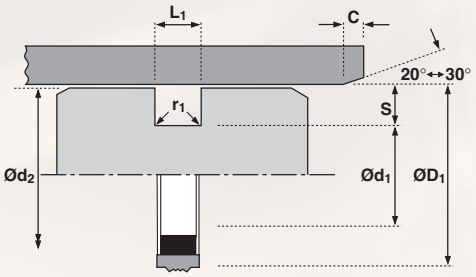

Design

The Hallite 775 is a compact seal for light to medium duty hydraulic cylinders. It is a double acting piston seal with single acting capabilities. This makes it an excellent choice for double acting applications where minimal dynamic leakage is required.

The Hallite 775 is manufactured for two housing standards; to fit standard O-ring grooves and for O-ring and two back-up grooves. It comprises a tough elastomeric face that is pre-loaded by a rectangular cross section expander.

The Hallite 775 seal can be used on SG iron pistons or on pistons with adequate remote bearing (see Hallite 506 or 533 bearings).

The standard material is suitable for hydraulic mineral oil applications.

For full details and availability please contact your local Hallite Sales office.

Features

- **Double acting seal with single acting capabilities**
- **Excellent wear resistance**
- **High extrusion resistance makes it ideal for use with remote wear rings such as the Hallite 506 or 533**
- **Advanced face geometry provides enhanced dynamic and static sealing**
- **More tolerant to dirt and contamination than common PTFE faces**
- **Rapid recovery after assembly. No resizing required**

780

Technical details

	Metric			Inch	
Operating conditions					
Maximum Speed	0.5 m/sec			1.5 ft/sec	
Temperature Range	-30°C +100°C			-22°F +212°F	
Maximum Pressure	400 bar			6000 p.s.i.	
Surface roughness	µmRa		µmRt	µinCLA	µinRMS
Dynamic Sealing Face $ØD_1$	0.1 <> 0.4		4 max	4 <> 16	5 <> 18
Static Sealing Face $Ød_1$ $Ød_2$	1.6 max		10 max	63 max	70 max
Static Housing Faces $Ød_3$ L_1 L_2	3.2 max		16 max	125 max	140 max

Chamfers & Radii						
Groove Section ≤ S mm	5.0	7.5	8.0	10.0	12.5	15.0
Min Chamfer C mm	2.4	4.0	5.0	5.0	6.5	7.5
Max Fillet Rad r_1 mm	0.4	0.4	0.4	0.4	0.8	0.8
Max Fillet Rad r_2 mm	0.4	0.4	0.4	0.4	0.8	0.8

Tolerances	$ØD_1$	$Ød_1$	$Ød_2$	$Ød_3$	L_1	L_2
mm	H9	h9	h9	h11	+0.2 -0	+0.1 -0

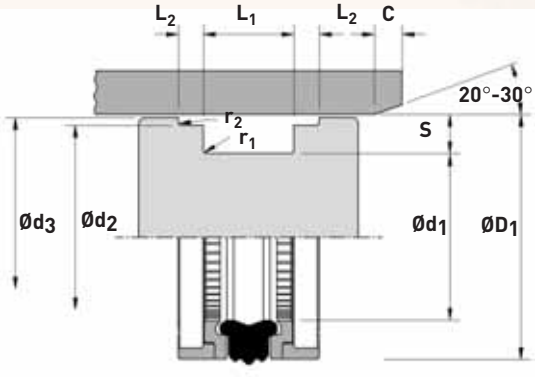

Design

A robust assembly designed specifically for one piece pistons, the Hallite 780 double acting seal uses a rubber sealing element that has proved itself in service to be extremely wear resistant and capable of working most effectively in a wide range of medium duty applications. The seal is also suitable for two piece pistons.

The assembly comprises a rubber sealing element, two split support rings and two split L-shaped bearings, one of each located either side of the seal.

The nitrile rubber sealing element is designed with multi-lips for efficient dynamic sealing with minimal low pressure friction and, when pressurised, be protected from extrusion damage by the extending lips of the support ring. The support ring is manufactured from a tough, flexible polymer and scarf cut for assembly.

Both the L-shaped bearings and support rings are grooved to ensure that the fluid pressure properly energises the sealing element and to prevent the possibility of any pressure trapping within the seal assembly.

Features

- **Well proven design**
- **Long life**

NB: Part numbers suffixed by "‡" indicate housing sizes to meet ISO 6547.

780

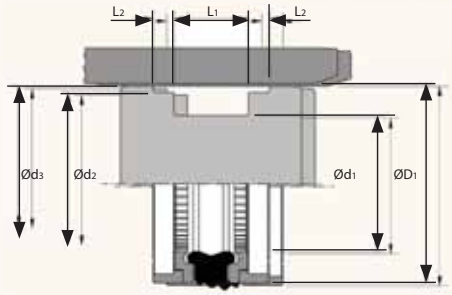

$ØD_1$	TOL H9	$Ød_1$	TOL h9	$Ød_2$	TOL h9	$Ød_3$	TOL h11	L_1 + 0.2 - 0	L_2 + 0.1 - 0	PART No.
20	+0.05 +0.00	11	+0.00 -0.04	17.00	+0.00 -0.04	19.0	+0.00 -0.13	13.5	2.10	5006710
25	+0.05 +0.00	15	+0.00 -0.04	21.00	+0.00 -0.05	24.0	+0.00 -0.13	12.0	4.00	5003710
25	+0.05 +0.00	16	+0.00 -0.04	22.00	+0.00 -0.05	24.0	+0.00 -0.13	13.5	2.10	5003810
30	+0.05 +0.00	17	+0.00 -0.04	27.00	+0.00 -0.05	29.0	+0.00 -0.13	15.4	6.35	5006410
30	+0.05 +0.00	21	+0.00 -0.05	27.00	+0.00 -0.05	29.0	+0.00 -0.13	13.5	2.10	5003910
32	+0.06 +0.00	22	+0.00 -0.05	28.00	+0.00 -0.07	31.0	+0.00 -0.16	15.5	2.60	5001420
32	+0.06 +0.00	22	+0.00 -0.05	28.50	+0.00 -0.05	30.5	+0.00 -0.16	16.4	6.35	5001410
35	+0.06 +0.00	25	+0.00 -0.05	31.00	+0.00 -0.06	34.0	+0.00 -0.16	15.5	2.60	5001520
35	+0.06 +0.00	25	+0.00 -0.05	31.40	+0.00 -0.06	33.5	+0.00 -0.16	16.4	6.35	5001510
40	+0.06 +0.00	24	+0.00 -0.05	35.40	+0.00 -0.06	38.5	+0.00 -0.16	18.4	6.35	5001310
40	+0.06 +0.00	30	+0.00 -0.05	37.00	+0.00 -0.06	39.0	+0.00 -0.16	12.5	4.00	5005810
40	+0.06 +0.00	30	+0.00 -0.05	35.40	+0.00 -0.06	38.5	+0.00 -0.16	16.4	6.35	5004010
45	+0.06 +0.00	29	+0.00 -0.05	40.40	+0.00 -0.06	43.5	+0.00 -0.16	18.4	6.35	5000710
45	+0.06 +0.00	31	+0.00 -0.06	41.00	+0.00 -0.06	44.0	+0.00 -0.16	15.5	2.60	5004110
45	+0.06 +0.00	35	+0.00 -0.06	40.40	+0.00 -0.06	43.5	+0.00 -0.16	16.4	6.35	5001610
50	+0.06 +0.00	34	+0.00 -0.06	45.40	+0.00 -0.06	48.5	+0.00 -0.16	18.4	6.35	5000810
50	+0.06 +0.00	34	+0.00 -0.06	46.00	+0.00 -0.06	49.0	+0.00 -0.16	20.5	3.10	5000820
50	+0.06 +0.00	38	+0.00 -0.06	46.00	+0.00 -0.06	49.4	+0.00 -0.16	20.5	4.20	5004810
50	+0.06 +0.00	40	+0.00 -0.06	47.00	+0.00 -0.06	49.0	+0.00 -0.16	12.5	4.00	5005910‡
55	+0.07 +0.00	39	+0.00 -0.06	50.36	+0.00 -0.07	53.5	+0.00 -0.19	18.4	6.35	5000910
55	+0.07 +0.00	39	+0.00 -0.06	51.00	+0.00 -0.07	54.0	+0.00 -0.19	20.5	3.10	5000920
60	+0.07 +0.00	44	+0.00 -0.06	55.40	+0.00 -0.07	58.5	+0.00 -0.19	18.4	6.35	5001010
60	+0.07 +0.00	44	+0.00 -0.06	56.00	+0.00 -0.07	59.0	+0.00 -0.19	20.5	3.10	5001020

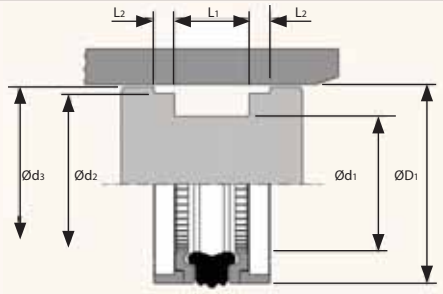

780

ØD1	TOL H9	Ød1	TOL h9	Ød2	TOL h9	Ød3	TOL h11	L1 +0.2 -0	L2 +0.1 -0	PART No.
60	+0.07 +0.00	48	+0.00 -0.06	56.00	+0.00 -0.07	59.4	+0.00 -0.19	20.5	4.20	5004910
63	+0.07 +0.00	47	+0.00 -0.06	58.40	+0.00 -0.07	61.5	+0.00 -0.19	18.4	6.35	5001110
63	+0.07 +0.00	47	+0.00 -0.06	58.40	+0.00 -0.07	61.5	+0.00 -0.19	19.4	6.35	5001120
63	+0.07 +0.00	47	+0.00 -0.06	59.00	+0.00 -0.07	62.0	+0.00 -0.19	20.5	3.10	5001130
63	+0.07 +0.00	51	+0.00 -0.07	59.00	+0.00 -0.07	62.4	+0.00 -0.19	20.5	4.20	5005010
63	+0.07 +0.00	53	+0.00 -0.07	60.00	+0.00 -0.07	62.0	+0.00 -0.19	12.5	4.00	5006010‡
65	+0.07 +0.00	49	+0.00 -0.06	61.00	+0.00 -0.07	64.0	+0.00 -0.19	20.5	3.10	5005510
65	+0.07 +0.00	50	+0.00 -0.06	60.40	+0.00 -0.07	63.5	+0.00 -0.19	18.4	6.35	5001210
70	+0.07 +0.00	50	+0.00 -0.06	64.20	+0.00 -0.07	68.3	+0.00 -0.19	22.4	6.35	5000210
70	+0.07 +0.00	54	+0.00 -0.07	66.00	+0.00 -0.07	69.0	+0.00 -0.19	20.5	3.10	5004210
70	+0.07 +0.00	58	+0.00 -0.07	66.00	+0.00 -0.07	69.4	+0.00 -0.19	20.5	4.20	5005110
75	+0.07 +0.00	55	+0.00 -0.07	69.20	+0.00 -0.07	73.3	+0.00 -0.19	22.4	6.35	5000310
75	+0.07 +0.00	59	+0.00 -0.07	71.00	+0.00 -0.07	74.0	+0.00 -0.19	20.5	3.10	5004310
80	+0.07 +0.00	60	+0.00 -0.07	74.15	+0.00 -0.07	78.3	+0.00 -0.19	22.4	6.35	5000110
80	+0.07 +0.00	62	+0.00 -0.07	76.00	+0.00 -0.07	79.0	+0.00 -0.19	22.5	3.60	5004410
80	+0.07 +0.00	66	+0.00 -0.07	76.00	+0.00 -0.07	79.4	+0.00 -0.19	22.5	5.20	5005210
85	+0.09 +0.00	65	+0.00 -0.07	79.15	+0.00 -0.07	83.3	+0.00 -0.22	22.4	6.35	5000410
90	+0.09 +0.00	70	+0.00 -0.07	84.15	+0.00 -0.09	88.3	+0.00 -0.22	22.4	6.35	5000510
90	+0.09 +0.00	76	+0.00 -0.07	86.00	+0.00 -0.09	89.4	+0.00 -0.22	22.5	5.20	5005310
95	+0.09 +0.00	75	+0.00 -0.07	89.15	+0.00 -0.09	93.3	+0.00 -0.22	22.4	6.35	5000610
100	+0.09 +0.00	75	+0.00 -0.07	93.15	+0.00 -0.09	98.0	+0.00 -0.22	22.4	6.35	5001710
100	+0.09 +0.00	80	+0.00 -0.07	95.00	+0.00 -0.09	98.0	+0.00 -0.22	25.0	6.30	5004710‡
100	+0.09 +0.00	82	+0.00 -0.09	96.00	+0.00 -0.09	99.0	+0.00 -0.22	22.5	3.60	5004510

780

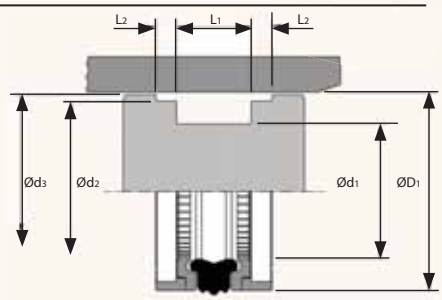

$ØD_1$	TOL H9	$Ød_1$	TOL h9	$Ød_2$	TOL h9	$Ød_3$	TOL h11	L_1 + 0.2 - 0	L_2 + 0.1 - 0	PART No.
100	+0.09 +0.00	85	+0.00 -0.09	96.00	+0.00 -0.09	98.5	+0.00 -0.22	20.0	5.00	5006110‡
100	+0.09 +0.00	86	+0.00 -0.09	96.00	+0.00 -0.09	99.4	+0.00 -0.22	22.5	5.20	5005410
105	+0.09 +0.00	80	+0.00 -0.07	98.10	+0.00 -0.09	103.0	+0.00 -0.22	22.4	6.35	5001810
110	+0.09 +0.00	85	+0.00 -0.09	103.10	+0.00 -0.09	108.0	+0.00 -0.22	22.4	6.35	5001910
115	+0.09 +0.00	90	+0.00 -0.09	108.10	+0.00 -0.09	113.0	+0.00 -0.22	22.4	6.35	5002010
120	+0.09 +0.00	95	+0.00 -0.09	113.10	+0.00 -0.09	118.0	+0.00 -0.22	22.4	6.35	5002110
125	+0.10 +0.00	100	+0.00 -0.09	118.10	+0.00 -0.09	123.0	+0.00 -0.25	25.4	6.35	5002310
125	+0.10 +0.00	105	+0.00 -0.09	120.00	+0.00 -0.09	123.0	+0.00 -0.25	25.0	6.30	5006210‡
130	+0.10 +0.00	105	+0.00 -0.09	123.10	+0.00 -0.10	128.0	+0.00 -0.25	25.4	6.35	5002420
130	+0.10 +0.00	105	+0.00 -0.09	122.60	+0.00 -0.10	128.0	+0.00 -0.25	25.4	9.50	5002410
135	+0.10 +0.00	110	+0.00 -0.09	127.60	+0.00 -0.10	133.0	+0.00 -0.25	25.4	9.50	5002510
140	+0.10 +0.00	115	+0.00 -0.09	133.00	+0.00 -0.10	138.0	+0.00 -0.25	25.4	6.35	5002220
140	+0.10 +0.00	115	+0.00 -0.09	132.60	+0.00 -0.10	138.0	+0.00 -0.25	25.4	9.50	5002210
145	+0.10 +0.00	120	+0.00 -0.09	137.60	+0.00 -0.10	143.0	+0.00 -0.25	25.4	9.50	5002610
150	+0.10 +0.00	125	+0.00 -0.10	142.60	+0.00 -0.10	148.0	+0.00 -0.25	25.4	9.50	5002710
155	+0.10 +0.00	130	+0.00 -0.10	147.60	+0.00 -0.10	153.0	+0.00 -0.25	25.4	9.50	5002810
160	+0.10 +0.00	130	+0.00 -0.10	152.60	+0.00 -0.10	158.0	+0.00 -0.25	25.4	9.50	5004610
160	+0.10 +0.00	130	+0.00 -0.10	153.00	+0.00 -0.10	158.0	+0.00 -0.25	25.4	6.35	5004620
160	+0.10 +0.00	135	+0.00 -0.10	152.60	+0.00 -0.10	158.0	+0.00 -0.25	25.4	9.50	5005610
165	+0.10 +0.00	140	+0.00 -0.10	157.60	+0.00 -0.10	163.0	+0.00 -0.25	25.4	9.50	5002910
170	+0.10 +0.00	145	+0.00 -0.10	161.70	+0.00 -0.10	168.0	+0.00 -0.25	25.4	12.70	5003010
175	+0.10 +0.00	150	+0.00 -0.10	166.70	+0.00 -0.10	173.0	+0.00 -0.25	25.4	12.70	5003110
180	+0.10 +0.00	150	+0.00 -0.10	172.95	+0.00 -0.10	178.0	+0.00 -0.25	35.4	6.35	5006310

780

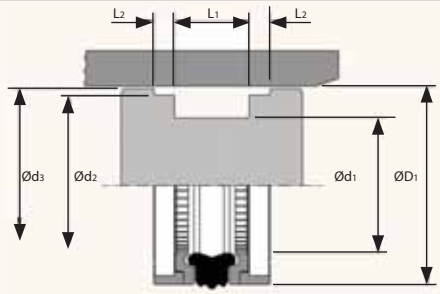

$ØD_1$	TOL H9	$Ød_1$	TOL h9	$Ød_2$	TOL h9	$Ød_3$	TOL h11	L_1 + 0.2 - 0	L_2 + 0.1 - 0	PART No.
180	+0.10 +0.00	155	+0.00 -0.10	171.70	+0.00 -0.10	178.0	+0.00 -0.25	25.4	12.70	5003210
185	+0.12 +0.00	160	+0.00 -0.10	176.70	+0.00 -0.10	183.0	+0.00 -0.25	25.4	12.70	5003310
190	+0.12 +0.00	165	+0.00 -0.10	181.70	+0.00 -0.12	188.0	+0.00 -0.29	25.4	12.70	5003410
195	+0.12 +0.00	170	+0.00 -0.10	186.70	+0.00 -0.12	193.0	+0.00 -0.29	25.4	12.70	5003510
200	+0.12 +0.00	175	+0.00 -0.10	191.60	+0.00 -0.12	198.0	+0.00 -0.29	25.4	12.70	5003610
230	+0.12 +0.00	205	+0.00 -0.10	221.60	+0.00 -0.12	227.0	+0.00 -0.29	25.4	12.70	5006510
250	+0.12 +0.00	225	+0.00 -0.10	241.60	+0.00 -0.12	247.0	+0.00 -0.29	25.4	12.70	5006610

RO 800

Technical details

	Metric		Inch	
Operating conditions				
Maximum Rotational Speed	0.2 m/sec		0.6 ft/sec	
Temperature Range	-30°C + 80°C		-22°F + 176°F	
Maximum Pressure	350 bar		5000 p.s.i.	
Limiting PV Value Lubricated	25 bar m/sec		1200 p.s.i ft/sec	
Maximum extrusion gap	**Figures show the maximum permissible gap all on one side using minimum rod Ø and maximum clearance Ø. Refer to Housing Design section**			
Pressure bar	100	200	350	
Housing Length L_1 4.2 mm	0.20	0.10	H7/f7 fit	
Housing Length L_1 6.3 mm	0.30	0.25	H7/f7 fit	
Pressure p.s.i	1500	3000	5000	
Surface roughness	µmRa	µmRt	µinCLA	µinRMS
Dynamic Sealing Face $Ød_1$	0.1 <> 0.3	2.5 max	4 <> 12	5 <> 13
Static Sealing Face $ØD_1$	1.6 max	10 max	63 max	70 max
Static Housing Faces L_1	3.2 max	16 max	125 max	140 max
Chamfers & Radii				
Groove Section ≤ S mm	5.5	7.75		
Min Chamfer C mm	3.0	5.0		
Max Fillet Rad r_1 mm	0.8	1.2		
Tolerances	$Ød_1$	$ØD_1$	L_1	
Rod mm	f9	H11	+0.2 -0	
Piston mm	h9	H9	+0.2 -0	

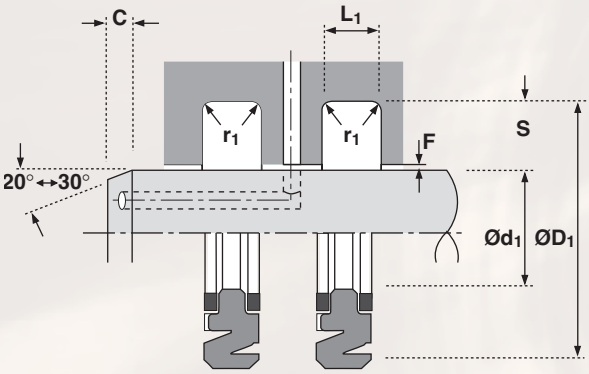

Design

A patented seal designed specifically for hydraulic swivels. Manufactured in the high grade Hythane® 181, Hallite's Ro800 is engineered as a one piece seal. No relative motion between the seal and the energiser can effect the lifetime of this seal, which is often mainly the problem of two piece swivel seals.
The special design of the Ro800 is minimizing the friction.
Optional anti-extrusion rings made from acetal are allowing larger extrusion gaps. The seal without anti-extrusion rings are made for applications with a very good guidance or low working pressure. Therefore please contact our technical service.
Ro800 is designed for double acting conditions. Designs are available for piston or rod applications.
The seal is easy to install in one piece housings.

FEATURES

- **One piece seal**
- **No rotation within the groove**
- **Available for Rod and Piston**
- **Very low friction**
- **Easy to install**
- **Low abrasion and good wear resistance**
- **Simple and small seal groves**

Technical details shown are for standard material option.

RO 800

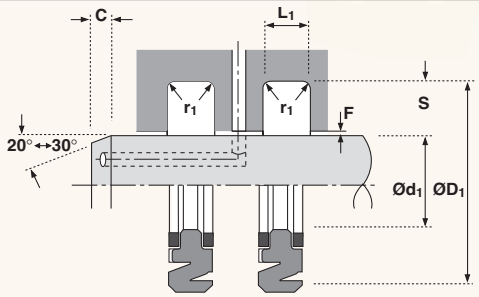

Rod Sealing

Ød1	ØD1	L1	PART No.
25.0	32.5	3.2	4763300*
32.0	39.5	3.2	4761300*
36.0	43.5	3.2	4770600*
40.0	51.0	4.2	4754400*
45.0	56.0	4.2	4743400*
70.0	80.0	5.0	4727800*
100.0	111.0	4.2	4777810
100.0	115.5	6.3	4762810
130.0	145.5	6.3	4720610

Bore Sealing

ØD1	Ød1	L1	PART No.
80.0	69.3	4.2	4748100*
90.0	79.3	4.2	4771300*
145.0	129.5	6.3	4712710
160.0	144.5	6.3	4712810
180.0	164.5	6.3	4720710

* without anti-extrusion rings

Hallite
Fenner Advanced Sealing Technologies

OTP®

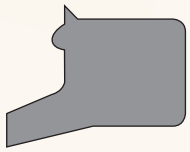

831

Technical details

	Metric		Inch	
Operating conditions				
Maximum Speed	4.0 m/sec		12.0 ft/sec	
Temperature Range	-45°C +110°C		-50°F +230°F	
Surface roughness	µmRa	µmRt	µinCLA	µinRMS
Dynamic Sealing Face Ød$_1$	0.1 <> 0.4	4 max	4 <> 16	5 <> 18
Static Sealing Face ØD$_1$	1.6 max	10 max	63 max	70 max
Static Housing Faces L$_1$	3.2 max	16 max	125 max	140 max
Radii				
Rod Diameter Ød$_1$	≤ 90	> 90		
Max Fillet Rad r$_1$ mm	0.2	0.4		
Max Fillet Rad r$_2$ mm	0.4	0.4		
Tolerances	Ød$_1$	ØD$_1$	ØD$_2$	L$_1$
mm	f9	H11	H11	+0.2 -0

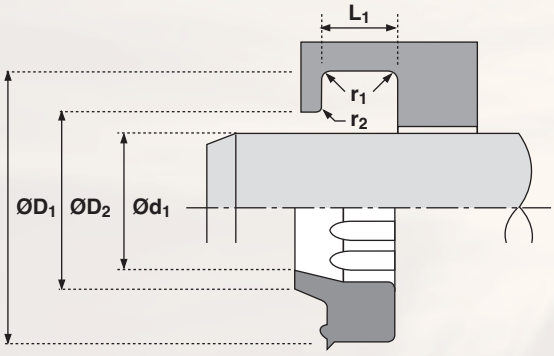

Design

The Hallite 831 wiper is designed to snap into a standard housing and provide reliable medium duty dirt exclusion. The proportions of the precision trimmed wiping lip ensure that it remains in contact with the rod surface to remove all deposits of mud and other forms of contamination except for those found in heavy duty industrial applications.

The outside diameter of the seal incorporates a 'crush lip' to provide interference fit with the housing and a 'face bead' to ensure that the crush lip is not trapped in the corner of the housing. The inside diameter of the seal is provided with ribs to prevent the possibility of blow-out due to pressure trapping of the main rod seal.

The Hallite 831 is precision moulded in polyurethane for maximum wear resistance and is interchangeable with many common European wiper styles.

Features

- **Precision trimmed sealing lip**
- **'Crush lip' and 'face bead' provide effective seal on housing**
- **Low wear long life**
- **Cost effective**
- **Pressure relief ribs**

831

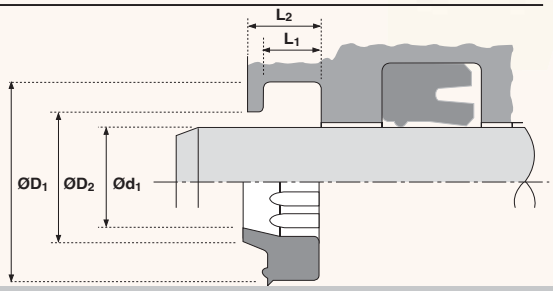

Ød1	TOL f9	ØD1	TOL H11	ØD2	TOL H11	L1 +0.2 - 0	L2	PART No.
12	-0.016 -0.059	18.6	+0.13 +0.00	15.0	+0.11 +0.00	3.8	5.3	4565800
14	-0.016 -0.059	20.6	+0.13 +0.00	17.0	+0.11 +0.00	3.8	5.3	4580000
16	-0.016 -0.059	22.6	+0.13 +0.00	19.0	+0.13 +0.00	3.8	5.3	4830600
16	-0.016 -0.059	24.6	+0.13 +0.00	19.0	+0.13 +0.00	5.3	7.0	4703800
18	-0.016 -0.059	24.6	+0.13 +0.00	21.0	+0.13 +0.00	3.8	5.3	4580100
18	-0.016 -0.059	26.6	+0.13 +0.00	21.0	+0.13 +0.00	5.3	7.0	4703900
20	-0.020 -0.072	28.6	+0.13 +0.00	23.0	+0.13 +0.00	5.3	7.0	4530600
22	-0.020 -0.072	30.6	+0.16 +0.00	25.0	+0.13 +0.00	5.3	7.0	4530700
25	-0.020 -0.072	33.6	+0.16 +0.00	28.0	+0.13 +0.00	5.3	7.0	4530800
28	-0.020 -0.072	36.6	+0.16 +0.00	31.0	+0.16 +0.00	5.3	7.0	4565900
30	-0.020 -0.072	38.6	+0.16 +0.00	33.0	+0.16 +0.00	5.3	7.0	4530900
32	-0.025 -0.087	40.6	+0.16 +0.00	35.0	+0.16 +0.00	5.3	7.0	4534500
35	-0.025 -0.087	43.6	+0.16 +0.00	38.0	+0.16 +0.00	5.3	7.0	4531000
36	-0.025 -0.087	44.6	+0.16 +0.00	39.0	+0.16 +0.00	5.3	7.0	4580200
38	-0.025 -0.087	46.6	+0.16 +0.00	41.0	+0.16 +0.00	5.3	7.0	4788300
40	-0.025 -0.087	48.6	+0.16 +0.00	43.0	+0.16 +0.00	5.3	7.0	4531100
42	-0.025 -0.087	50.6	+0.16 +0.00	45.0	+0.16 +0.00	5.3	7.0	4788400
45	-0.025 -0.087	53.6	+0.19 +0.00	48.0	+0.16 +0.00	5.3	7.0	4533800
45	-0.025 -0.087	55.6	+0.19 +0.00	48.0	+0.16 +0.00	5.3	7.0	4531200
47	-0.025 -0.087	55.6	+0.19 +0.00	50.0	+0.16 +0.00	5.3	7.0	4778100
50	-0.025 -0.087	58.6	+0.19 +0.00	53.0	+0.19 +0.00	5.3	7.0	4533900
50	-0.025 -0.087	60.6	+0.19 +0.00	53.0	+0.19 +0.00	5.3	7.0	4531300
55	-0.030 -0.104	63.6	+0.19 +0.00	58.0	+0.19 +0.00	5.3	7.0	4534000

Hallite
Fenner Advanced Sealing Technologies

OTP®

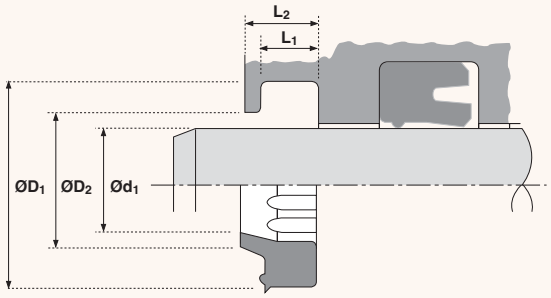

831

Ød1	TOL f9	ØD1	TOL H11	ØD2	TOL H11	L1 +0.2 - 0	L2	PART No.
55	-0.030 -0.104	65.6	+0.19 +0.00	58.0	+0.19 +0.00	5.3	7.0	4531400
56	-0.030 -0.104	64.6	+0.19 +0.00	59.0	+0.19 +0.00	5.3	7.0	4566000
56	-0.030 -0.104	66.6	+0.19 +0.00	59.0	+0.19 +0.00	5.3	7.0	4704000
60	-0.030 -0.104	68.6	+0.19 +0.00	63.0	+0.19 +0.00	5.3	7.0	4534100
60	-0.030 -0.104	70.6	+0.19 +0.00	63.0	+0.19 +0.00	5.3	7.0	4531500
63	-0.030 -0.104	73.6	+0.19 +0.00	66.0	+0.19 +0.00	5.3	7.0	4824400
70	-0.030 -0.104	78.6	+0.19 +0.00	73.0	+0.19 +0.00	5.3	7.0	4534200
70	-0.030 -0.104	80.6	+0.22 +0.00	73.0	+0.19 +0.00	5.3	7.0	4531600
80	-0.030 -0.104	88.6	+0.22 +0.00	83.0	+0.22 +0.00	5.3	7.0	4534300
80	-0.030 -0.104	92.2	+0.22 +0.00	86.0	+0.22 +0.00	7.1	12.0	4531700
85	-0.036 -0.123	93.6	+0.22 +0.00	88.0	+0.22 +0.00	5.3	7.0	4534400
85	-0.036 -0.123	97.2	+0.22 +0.00	91.0	+0.22 +0.00	7.1	12.0	4531800
90	-0.036 -0.123	102.2	+0.22 +0.00	96.0	+0.22 +0.00	7.1	12.0	4531900
100	-0.036 -0.123	112.2	+0.22 +0.00	106.0	+0.22 +0.00	7.1	12.0	4532000
110	-0.036 -0.123	122.2	+0.25 +0.00	116.0	+0.22 +0.00	7.1	12.0	4538200
135	-0.043 -0.143	147.2	+0.25 +0.00	141.0	+0.25 +0.00	7.1	12.0	4538100

Hallite
Fenner Advanced Sealing Technologies

OTP®

834

Technical details

	Metric		Inch	
Operating conditions				
Maximum Speed	4.0 m/sec		12.0 ft/sec	
Temperature Range	-45°C +110°C		-50°F +230°F	
Surface roughness	µmRa	µmRt	µinCLA	µinRMS
Dynamic Sealing Face Ød$_1$	0.1 < > 0.4	4 max	4 < > 16	5 < > 18
Static Sealing Face ØD$_1$ ØD$_2$	1.6 max	10 max	63 max	70 max
Static Housing Faces L$_1$	3.2 max	16 max	125 max	140 max
Radii				
Max Fillet Rad r$_1$ mm	0.4			
Max Fillet Rad r$_2$ mm	0.2			
Tolerances	Ød$_1$	ØD$_1$	ØD$_2$	L$_1$
mm	f9	H11	H11	+0.2 -0

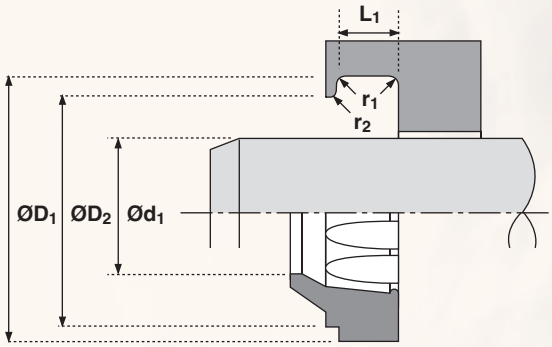

Design

The Hallite 834 wiper is designed to snap into a standard housing and provide reliable medium duty dirt exclusion. The proportions of the wiping lip ensure that it remains in contact with the rod surface to remove all deposits of mud and other forms of contamination except for those found in the heavy duty environment such as steel works and cement factories.

The inside diameter of the seal is provided with ribs to prevent the possibility of blow out due to pressure trapping of the main rod seal.

The Hallite 834 is precision moulded in Hythane® 181 for maximum wear resistance.

Features

- **Snug fit provides effective sealing**
- **Low wear – long life**
- **Easy installation**
- **Pressure relief ribs**

834

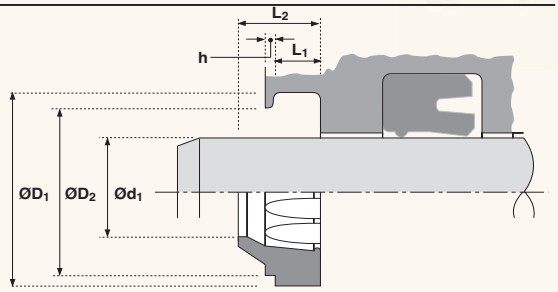

Ød1	TOL f9	ØD1	TOL H11	ØD2	TOL H11	L1 +0.2 - 0	L2	h	PART No.
18	-0.016 -0.059	26.0	+0.13 +0.00	24.0	+0.13 +0.00	4.0	7.0	1.0	4367200
20	-0.020 -0.072	28.0	+0.13 +0.00	26.0	+0.13 +0.00	4.0	7.0	1.0	4391300
22	-0.020 -0.072	30.0	+0.13 +0.00	28.0	+0.13 +0.00	4.0	7.0	1.0	4370600
25	-0.020 -0.072	33.0	+0.16 +0.00	31.0	+0.16 +0.00	4.0	7.0	1.0	4343900
26	-0.020 -0.072	34.0	+0.16 +0.00	32.0	+0.16 +0.00	4.0	7.0	1.0	4514400
28	-0.020 -0.072	36.0	+0.16 +0.00	34.0	+0.16 +0.00	4.0	7.0	1.0	4373500
30	-0.020 -0.072	38.0	+0.16 +0.00	36.0	+0.16 +0.00	4.0	7.0	1.0	4378800
32	-0.025 -0.087	40.0	+0.16 +0.00	38.0	+0.16 +0.00	4.0	7.0	1.0	4373600
35	-0.025 -0.087	43.0	+0.16 +0.00	41.0	+0.16 +0.00	4.0	7.0	1.0	4398400
36	-0.025 -0.087	44.0	+0.16 +0.00	42.0	+0.16 +0.00	4.0	7.0	1.0	4370700
37	-0.025 -0.087	45.0	+0.16 +0.00	43.0	+0.16 +0.00	4.0	7.0	1.0	4514500
38	-0.025 -0.087	46.0	+0.16 +0.00	44.0	+0.16 +0.00	4.0	7.0	1.0	4515400
40	-0.025 -0.087	48.0	+0.16 +0.00	46.0	+0.16 +0.00	4.0	7.0	1.0	4378900
45	-0.025 -0.087	53.0	+0.19 +0.00	51.0	+0.19 +0.00	4.0	7.0	1.0	4370800
46	-0.025 -0.087	54.0	+0.19 +0.00	52.0	+0.19 +0.00	4.0	7.0	1.0	4515200
48	-0.025 -0.087	56.0	+0.19 +0.00	54.0	+0.19 +0.00	4.0	7.0	1.0	4432700
50	-0.025 -0.087	58.0	+0.19 +0.00	56.0	+0.19 +0.00	4.0	7.0	1.0	4379000
55	-0.030 -0.104	63.0	+0.19 +0.00	61.0	+0.19 +0.00	4.0	7.0	1.0	4515100
56	-0.030 -0.104	64.0	+0.19 +0.00	62.0	+0.19 +0.00	4.0	7.0	1.0	4385100
60	-0.030 -0.104	68.0	+0.19 +0.00	66.0	+0.19 +0.00	4.0	7.0	1.0	4385200
63	-0.030 -0.104	71.0	+0.19 +0.00	69.0	+0.19 +0.00	4.0	7.0	1.0	4385300
65	-0.030 -0.104	73.0	+0.19 +0.00	71.0	+0.19 +0.00	4.0	7.0	1.0	4394200
70	-0.030 -0.104	78.0	+0.19 +0.00	76.0	+0.19 +0.00	4.0	7.0	1.0	4373700

834

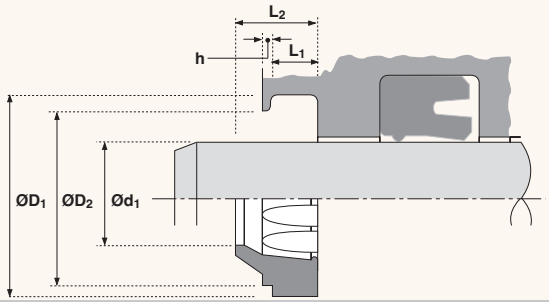

Ød1	TOL f9	ØD1	TOL H11	ØD2	TOL H11	L1 +0.2 - 0	L2	h	PART No.
75	-0.030 -0.104	83.0	+0.22 +0.00	81.0	+0.22 +0.00	4.0	7.0	1.0	4711900
80	-0.030 -0.104	88.0	+0.22 +0.00	86.0	+0.22 +0.00	4.0	7.0	1.0	4398500
90	-0.036 -0.123	98.0	+0.22 +0.00	96.0	+0.22 +0.00	4.0	7.0	1.0	4398600
100	-0.036 -0.123	108.0	+0.22 +0.00	106.0	+0.22 +0.00	4.0	7.0	1.0	4394300
110	-0.036 -0.123	118.0	+0.22 +0.00	116.0	+0.22 +0.00	4.0	7.0	1.0	4448200
140	-0.043 -0.143	152.0	+0.25 +0.00	149.0	+0.25 +0.00	5.5	10.0	1.5	4456100

Hallite
Fenner Advanced Sealing Technologies

OTP®

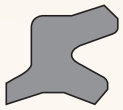

839

Technical details

	Metric		Inch	
Operating conditions				
Maximum Speed	4.0 m/sec		12.0 ft/sec	
Temperature Range	-45°C +110°C		-50°F +230°F	
Surface roughness	µmRa	µmRt	µinCLA	µinRMS
Dynamic Sealing Face Ød$_1$	0.1 < > 0.4	4 max	4 < > 16	5 < > 18
Static Sealing Face ØD$_1$ ØD$_2$	1.6 max	10 max	63 max	70 max
Static Housing Faces L$_1$	3.2 max	16 max	125 max	140 max
Chamfers & Radii				
Rod Diameter Ød$_1$ mm	≤ 90	> 90		
Max Fillet Rad r$_1$ mm	0.2	0.4		
Max Fillet Rad r$_2$ mm	0.4	0.4		
Tolerances	Ød$_1$	ØD$_1$	ØD$_2$	L$_1$
839 mm	f9	H11	H11	+0.2 -0
839N mm	f9	+0-0.2	±0.1	+0.4 -0

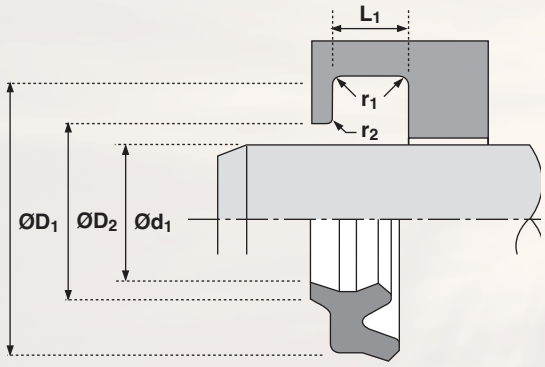

839

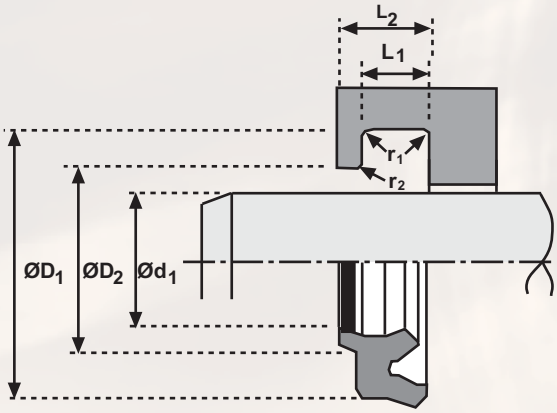

839N Textured Wiping Lip

Design

The Hallite 839 wiper is precision moulded in Hallite's high performance polyurethane – Hythane® 181 for maximum wear resistance, and is designed to exclude dirt and moisture from entering the cylinder and to collect traces of fluid passing the rod seal.

Opposite the wiper lip are two sealing lips accurately produced and proportioned to collect fluid passing the rod seal. To obtain stability and improve the seal the outside diameter is in interference with the housing.

The Hallite 839N wiper is designed to suit popular Asian housing and has a textured wiping lip for improved performance.

Features

- **Twin lip ensures drier sealing system.**
- **Hard wearing material for long life**
- **ISO housing range (839)**

NB: Part numbers suffixed by "‡" indicate housing sizes to meet ISO 6195C.

A vent between the seal and the wiper is recommended to avoid a pressure trap.

839

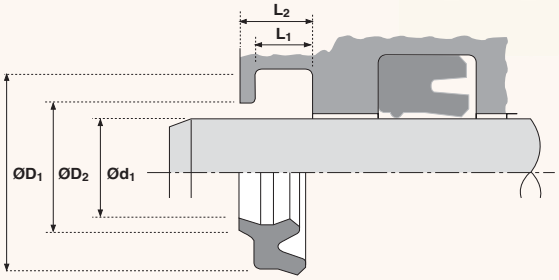

Ød1	TOL f9	ØD1	TOL H11	ØD2	TOL H11	L1 +0.2 - 0	L2	PART No.
12	-0.016 -0.059	18.0	+0.11 +0.00	14.5	+0.11 +0.00	4.0	7.0	4436800‡
14	-0.016 -0.059	20.0	+0.13 +0.00	16.5	+0.11 +0.00	4.0	7.0	4436900‡
15	-0.016 -0.059	22.0	+0.11 +0.00	18.0	+0.11 +0.00	3.8	6.0	4762300‡
18	-0.016 -0.059	24.0	+0.13 +0.00	20.5	+0.13 +0.00	4.0	7.0	4437000‡
20	-0.020 -0.072	26.0	+0.13 +0.00	22.5	+0.13 +0.00	4.0	7.0	4415000‡
22	-0.020 -0.072	28.0	+0.13 +0.00	24.5	+0.13 +0.00	4.0	7.0	4437100‡
25	-0.016 -0.059	31.0	+0.11 +0.00	27.5	+0.11 +0.00	4.0	7.0	4799700‡
28	-0.020 -0.072	36.0	+0.16 +0.00	31.0	+0.16 +0.00	5.0	8.0	4437200‡
30	-0.020 -0.072	38.0	+0.16 +0.00	33.0	+0.16 +0.00	5.0	8.0	4519200
32	-0.025 -0.087	40.0	+0.16 +0.00	35.0	+0.16 +0.00	5.0	8.0	4594000‡
36	-0.025 -0.087	44.0	+0.16 +0.00	39.0	+0.16 +0.00	5.0	8.0	4437300‡
40	-0.025 -0.087	48.0	+0.16 +0.00	43.0	+0.16 +0.00	5.0	8.0	4591600‡
45	-0.025 -0.087	53.0	+0.19 +0.00	48.0	+0.16 +0.00	5.0	8.0	4437400‡
50	-0.025 -0.087	58.0	+0.19 +0.00	53.0	+0.19 +0.00	5.0	8.0	4584400‡
55	-0.030 -0.104	65.0	+0.19 +0.00	58.0	+0.19 +0.00	6.0	9.7	4575200
56	-0.030 -0.104	66.0	+0.19 +0.00	59.0	+0.19 +0.00	6.0	9.7	4437500‡
60	-0.030 -0.104	70.0	+0.19 +0.00	63.0	+0.19 +0.00	6.0	9.7	4802400
65	-0.030 -0.104	75.0	+0.19 +0.00	68.0	+0.19 +0.00	6.0	9.7	4575300
70	-0.030 -0.104	80.0	+0.19 +0.00	73.0	+0.19 +0.00	6.0	9.7	4437600‡
90	-0.036 -0.123	100.0	+0.22 +0.00	93.0	+0.22 +0.00	6.0	9.7	4437700‡
110	-0.036 -0.123	125.0	+0.25 +0.00	114.0	+0.22 +0.00	8.5	13.0	4437800‡
130	-0.043 -0.143	142.0	+0.25 +0.00	135.0	+0.25 +0.00	8.2	11.0	4786300
140	-0.043 -0.143	155.0	+0.25 +0.00	144.0	+0.25 +0.00	8.5	13.0	4437900‡

839

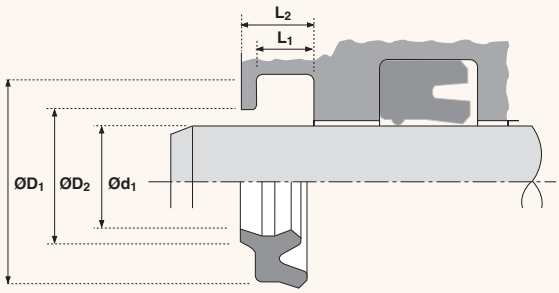

Ød1	TOL f9	ØD1	TOL H11	ØD2	TOL H11	L1 +0.2 - 0	L2	PART No.
150	-0.043 -0.143	165.0	+0.25 +0.00	154.0	+0.25 +0.00	8.5	13.0	4804200
180	-0.043 -0.143	196.0	+0.29 +0.00	184.0	+0.29 +0.00	9.5	14.0	4595600

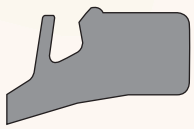

842

Technical details

	Metric		Inch	
Operating conditions				
Maximum Speed	4.0 m/sec		12.0 ft/sec	
Temperature Range	-45°C +110°C		-50°F +230°F	
Surface roughness	µmRa	µmRt	µinCLA	µinRMS
Dynamic Sealing Face $Ød_1$	0.1 <> 0.4	4 max	4 <> 16	5 <> 18
Static Sealing Face $ØD_1$ $ØD_2$ h	1.6 max	10 max	63 max	70 max
Static Housing Faces L_1	3.2 max	16 max	125 max	140 max
Radii				
Rod Diameter $Ød_1$	≤ 50	≤ 90	≤ 200	> 200
Max Fillet Rad r_1 mm	0.4	0.4	0.4	0.8
Max Fillet Rad r_2 mm	0.2	0.4	0.6	0.8
Rod Diameter $Ød_1$	≤ 2.000	≤ 3.500	≤ 7.875	> 7.875
Max Fillet Rad r_1 in	0.016	0.016	0.016	0.032
Max Fillet Rad r_2 in	0.008	0.016	0.024	0.032

Tolerances	$Ød_1$	$ØD_1$	$ØD_2$	L_1	h
mm	f9	H11	H11	+0.2 -0	+0.10 +0
in	f9	H11	H11	+0.008 -0	+0.004 +0

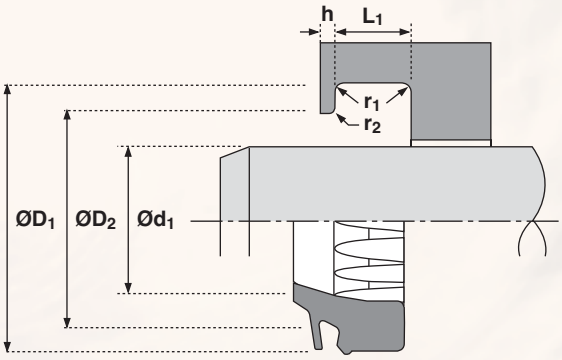

Design

The Hallite 842 rod wiper is designed to prevent the ingress of foreign particles and moisture into the cylinder. The profile has been specially developed for harsh environments, in particular the longwall mining industry.

The special feature is the flap on the wiping lip which covers the gland housing, preventing the water/slurry trap so common with conventional wipers and thus ingress of contamination around the outside of the wiper. The internal ribs on the inside diameter prevent the possibility of pressure trapping between the gland seal and the wiper and ensure correct support and guidance of the wiping lip, even in cases of high eccentricity as can occur between the outer stage gland and the inner cylinder of a roof support leg.

The Hallite 842 is manufactured in Hallite's high performance polyurethane, Hythane® 181. The material has excellent compression set characteristics, excellent wear and abrasive resistance, proven compatibility with HFA (95/5) fluids, as used in longwall mining equipment, and with mineral oil.

A number of sizes, indicated by *, do not have an interference fit between the outside diameter of the wiper and the wiper housing bore $ØD_1$. They float on the retaining lip.

NB: Part numbers suffixed by" ‡ " indicate housing sizes to meet ISO6195A

842

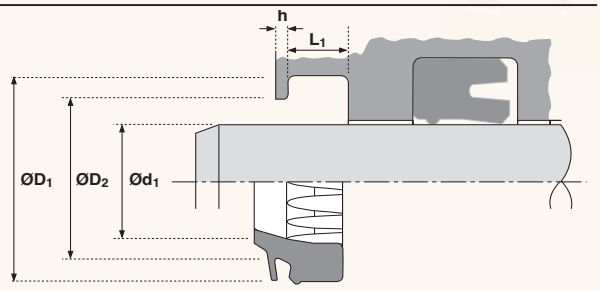

Ød1	TOL f9	ØD1	TOL H11	ØD2	TOL H11	L1 +0.2 - 0	L2	h +0.1 - 0	PART No.
32	-0.025 -0.087	40.0	+0.16 +0.00	37.5	+0.16 +0.00	5.0	8.0	1.50	4714900‡
35	-0.025 -0.087	45.0	+0.16 +0.00	42.0	+0.16 +0.00	6.3	10.0	1.50	4515300
36	-0.025 -0.087	44.0	+0.16 +0.00	41.5	+0.16 +0.00	5.0	8.0	1.50	4715000‡
38	-0.025 -0.087	46.0	+0.16 +0.00	43.0	+0.16 +0.00	5.3	8.0	1.50	4568700
40	-0.025 -0.087	48.0	+0.16 +0.00	45.5	+0.16 +0.00	5.0	8.0	1.50	4536500‡
45	-0.025 -0.087	53.0	+0.19 +0.00	50.5	+0.19 +0.00	5.0	8.0	1.50	4715100‡
50	-0.025 -0.087	58.0	+0.19 +0.00	55.5	+0.19 +0.00	5.0	8.0	1.50	4533600‡
55	-0.030 -0.104	65.0	+0.19 +0.00	62.0	+0.19 +0.00	6.3	10.0	1.50	4764600
56	-0.030 -0.104	66.0	+0.19 +0.00	63.0	+0.19 +0.00	6.3	10.0	1.50	4715200‡
60	-0.030 -0.104	70.0	+0.19 +0.00	67.0	+0.19 +0.00	6.3	10.0	1.50	4557800
60	-0.030 -0.104	72.0	+0.19 +0.00	67.0	+0.19 +0.00	4.1	10.0	2.50	4739300*
63	-0.030 -0.104	73.0	+0.19 +0.00	70.0	+0.19 +0.00	6.3	10.0	1.50	4536600‡
70	-0.030 -0.104	82.6	+0.22 +0.00	78.4	+0.19 +0.00	8.0	12.0	2.00	4480800
70	-0.030 -0.104	85.0	+0.22 +0.00	78.0	+0.19 +0.00	5.1	12.0	3.00	4739400*
75	-0.030 -0.104	90.0	+0.22 +0.00	83.0	+0.22 +0.00	5.1	12.0	3.00	4744000*
80	-0.030 -0.104	90.0	+0.22 +0.00	87.0	+0.22 +0.00	6.3	10.0	1.50	4715300‡
80	-0.030 -0.104	95.0	+0.22 +0.00	88.0	+0.22 +0.00	5.1	12.0	3.00	4739500*
85	-0.036 -0.123	97.6	+0.22 +0.00	93.4	+0.22 +0.00	8.0	12.0	2.00	4521800
85	-0.036 -0.123	100.0	+0.22 +0.00	93.0	+0.22 +0.00	5.1	10.0	3.00	4744100*
90	-0.036 -0.123	102.2	+0.22 +0.00	96.0	+0.22 +0.00	7.1	12.4	2.80	4727300
90	-0.036 -0.123	102.6	+0.22 +0.00	98.4	+0.22 +0.00	8.0	12.0	2.00	4512500
90	-0.036 -0.123	105.0	+0.22 +0.00	98.0	+0.22 +0.00	5.1	10.0	3.00	4744600*
95	-0.036 -0.123	110.0	+0.22 +0.00	105.0	+0.22 +0.00	9.5	14.0	2.80	4536900

Hallite
Fenner Advanced Sealing Technologies

OTP®

842

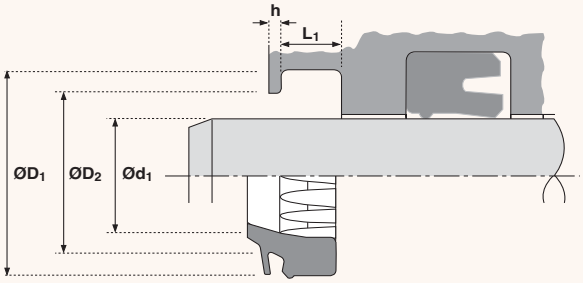

Ød1	TOL f9	ØD1	TOL H11	ØD2	TOL H11	L1 +0.2 - 0	L2	h +0.1 - 0	PART No.
100	-0.036 -0.123	112.2	+0.22 +0.00	106.0	+0.22 +0.00	7.1	12.4	2.80	4727400
100	-0.036 -0.123	114.0	+0.22 +0.00	109.9	+0.22 +0.00	8.0	12.0	1.50	4536000
100	-0.036 -0.123	115.0	+0.22 +0.00	108.0	+0.22 +0.00	5.1	12.0	3.00	4584800*
100	-0.036 -0.123	115.0	+0.22 +0.00	110.0	+0.22 +0.00	9.5	14.0	2.00	4589500‡
105	-0.036 -0.123	120.0	+0.22 +0.00	115.0	+0.22 +0.00	9.5	14.0	2.50	4532100
110	-0.036 -0.123	125.0	+0.25 +0.00	118.0	+0.22 +0.00	5.1	12.0	3.00	4739600*
110	-0.036 -0.123	125.0	+0.25 +0.00	120.0	+0.22 +0.00	9.5	14.0	2.00	4715400‡
120	-0.036 -0.123	135.0	+0.25 +0.00	130.0	+0.25 +0.00	9.5	14.0	2.00	4580800
125	-0.043 -0.123	137.2	+0.25 +0.00	131.0	+0.25 +0.00	7.6	12.9	2.80	4727500
125	-0.043 -0.143	140.0	+0.25 +0.00	133.0	+0.25 +0.00	5.1	12.0	3.00	4748300*
125	-0.043 -0.143	140.0	+0.25 +0.00	135.0	+0.25 +0.00	9.5	14.0	2.00	4715500‡
130	-0.043 -0.143	145.0	+0.25 +0.00	140.0	+0.25 +0.00	9.5	14.0	2.25	4491700
140	-0.043 -0.143	152.2	+0.25 +0.00	146.0	+0.25 +0.00	7.6	12.9	2.80	4727600
140	-0.043 -0.143	155.0	+0.25 +0.00	150.0	+0.25 +0.00	9.5	14.0	2.00	4555900‡
145	-0.043 -0.143	160.0	+0.25 +0.00	155.0	+0.25 +0.00	9.5	14.0	2.25	4570200
150	-0.043 -0.143	169.0	+0.25 +0.00	159.0	+0.25 +0.00	6.1	14.0	4.00	4748400*
155	-0.043 -0.143	170.0	+0.25 +0.00	165.0	+0.25 +0.00	9.5	12.0	2.25	4535200
170	-0.043 -0.143	189.0	+0.29 +0.00	179.0	+0.25 +0.00	6.1	14.0	4.00	4749200*
175	-0.043 -0.143	190.0	+0.29 +0.00	185.0	+0.29 +0.00	9.5	14.0	2.25	4552100
180	-0.043 -0.143	195.0	+0.29 +0.00	190.0	+0.29 +0.00	9.5	14.0	2.25	4491300‡
190	-0.050 -0.165	209.0	+0.29 +0.00	199.0	+0.29 +0.00	6.1	14.0	4.00	4749300*
200	-0.050 -0.165	223.0	+0.29 +0.00	211.0	+0.29 +0.00	8.3	20.0	4.80	4748700*
215	-0.050 -0.165	230.0	+0.29 +0.00	225.0	+0.29 +0.00	9.5	14.0	2.00	4705500

842

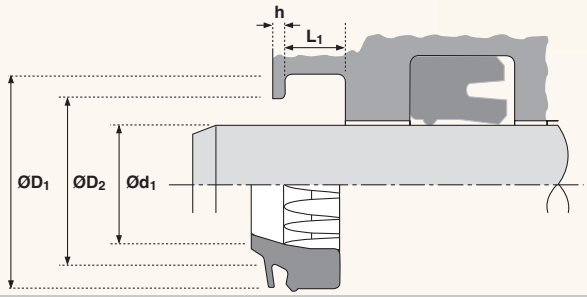

Ød1	TOL f9	ØD1	TOL H11	ØD2	TOL H11	L1 +0.2 - 0	L2	h +0.1 - 0	PART No.
230	-0.050 -0.165	250.0	+0.29 +0.00	240.0	+0.29 +0.00	10.2	18.0	3.80	4750500
250	-0.050 -0.165	270.0	+0.32 +0.00	260.0	+0.32 +0.00	10.2	18.0	3.80	4725100
320	-0.062 -0.202	340.0	+0.36 +0.00	330.0	+0.36 +0.00	10.2	18.0	3.80	4750400
350	-0.062 -0.202	370.0	+0.36 +0.00	360.0	+0.36 +0.00	10.2	18.0	3.80	4725200

*These wipers do not have an interference fit between the outside diameter of the wiper and the wiper housing bore ØD1. They float on the retaining lip.

Hallite
Fenner Advanced Sealing Technologies

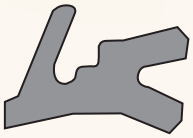

844

Technical details

	Metric		Inch	
Operating conditions				
Maximum Speed	4.0 m/sec		12.0 ft/sec	
Temperature Range	-45°C +110°C		-50°F +230°F	
Surface roughness	µmRa	µmRt	µinCLA	µinRMS
Dynamic Sealing Face $Ød_1$	0.1 <> 0.4	4 max	4 <> 16	5 <> 18
Static Sealing Face $ØD_1$ $ØD_2$ h	1.6 max	10 max	63 max	70 max
Static Housing Faces L_1	3.2 max	16 max	125 max	140 max
Radii				
Max Fillet Rad r_1 mm	0.4			
Max Fillet Rad r_2 mm	0.4			

Tolerances	$Ød_1$	$ØD_1$	$ØD_2$	L_1	h
mm	f9	H11	H11	+0.2 -0	+0.2 -0

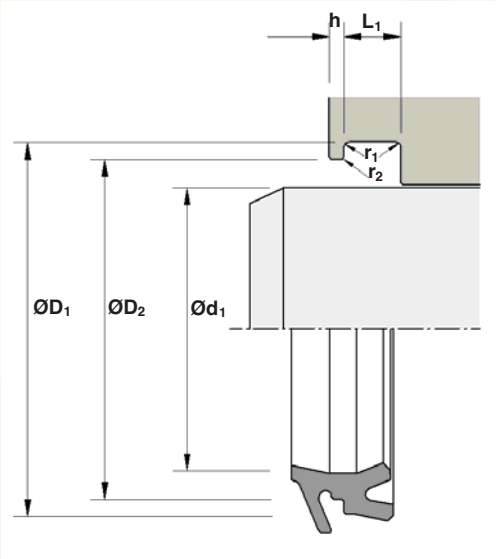

Design

The Hallite 844 wiper has been specifically developed for cylinders used in demanding off-highway applications. It is a double lip wiper designed for use with venting U-rings such as the Hallite 663 rod seal. The special feature is the flap on the wiping lip which covers the gland housing, preventing the water/slurry trap so common with conventional wipers and thus ingress of contamination around the outside of the wiper. The design minimises the oil transfer out of the ram on the cylinder rod and prevents dirt, contamination and moisture entering the cylinder through the rod gland. The design is also particularly tolerant to rod deflection.

The standard range is made from the high-performance Hallite ® 361 polyurethane. The wiper is also available in other Hallite polyurethane grades, if required.

Some sizes, indicated by * have a textured wiping lip as the Type 846 for long stroking cylinder applications.

844

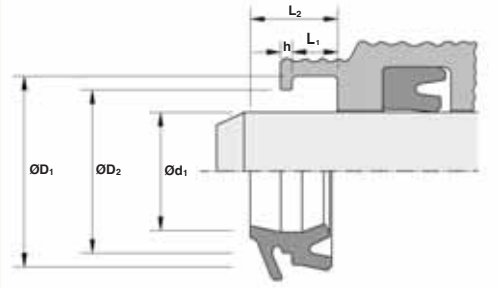

Ød1	TOL f9	ØD1	TOL H11	ØD2	TOL H11	L1 +0.2 - 0	L2	h +0.2 - 0	PART No.
25	-0.020 -0.072	31.0	+0.16 +0.00	28.8	+0.13 +0.00	4.0	7.0	1.00	4805206
28	-0.020 -0.072	36.0	+0.16 +0.00	33.0	+0.16 +0.00	5.0	9.0	1.20	4833106
30	-0.020 -0.072	38.0	+0.16 +0.00	35.0	+0.16 +0.00	5.0	9.0	1.20	4803706
32	-0.020 -0.087	40.0	+0.16 +0.00	37.0	+0.16 +0.00	5.0	9.0	1.20	4827706
35	-0.020 -0.087	43.0	+0.16 +0.00	40.0	+0.16 +0.00	5.0	9.0	1.20	4805306
36	-0.020 -0.087	44.0	+0.16 +0.00	41.0	+0.16 +0.00	5.0	9.0	1.20	4833206
40	-0.020 -0.087	48.0	+0.16 +0.00	45.0	+0.16 +0.00	5.0	9.0	1.20	4794006
45	-0.020 -0.087	53.0	+0.19 +0.00	50.0	+0.16 +0.00	5.0	9.0	1.20	4800006
50	-0.020 -0.087	58.0	+0.19 +0.00	55.0	+0.19 +0.00	5.0	9.0	1.20	4803606
50.8	-0.030 -0.104	60.8	+0.19 +0.00	57.8	+0.19 +0.00	6.0	10.0	1.20	4781500*
55	-0.030 -0.104	65.0	+0.19 +0.00	60.0	+0.19 +0.00	6.0	11.5	1.60	4805406
60	-0.030 -0.104	70.0	+0.19 +0.00	67.0	+0.19 +0.00	6.0	11.5	1.60	4799506
63	-0.030 -0.104	73.0	+0.19 +0.00	70.0	+0.19 +0.00	6.0	11.5	1.60	4833306
65	-0.030 -0.104	75.0	+0.19 +0.00	72.0	+0.19 +0.00	6.0	11.5	1.60	4805506
70	-0.030 -0.104	80.0	+0.19 +0.00	77.0	+0.19 +0.00	6.0	11.5	1.60	4805606
75	-0.030 -0.104	85.0	+0.22 +0.00	82.0	+0.22 +0.00	6.0	11.5	1.60	4805706
80	-0.030 -0.104	90.0	+0.22 +0.00	87.0	+0.22 +0.00	6.0	11.5	1.60	4805806
85	-0.036 -0.123	95.0	+0.22 +0.00	92.0	+0.22 +0.00	6.0	11.5	1.60	4805906
90	-0.036 -0.123	100.0	+0.22 +0.00	97.0	+0.22 +0.00	6.0	11.5	1.60	4806006
105	-0.036 -0.123	120.0	+0.22 +0.00	115.0	+0.22 +0.00	9.5	17.0	2.50	4800400*

* These parts are made in Hythane® 181 and have a textured wiping lip for long stroking cylinder applications.

846

Technical details

	Metric		Inch	
Operating conditions				
Maximum Speed	4.0 m/sec		12.0 ft/sec	
Temperature Range	-45°C +110°C		-50°F +230°F	
Surface roughness	µmRa	µmRt	µinCLA	µinRMS
Dynamic Sealing Face Ød$_1$	0.1 <> 0.4	4 max	4 <> 16	5 <> 18
Static Sealing Face ØD$_1$ h	1.6 max	10 max	63 max	70 max
Static Housing Faces L$_1$	3.2 max	16 max	125 max	140 max
Radii				
Rod Diameter Ød$_1$ mm	≤90	>90		
Max Fillet Rad r$_1$ mm	0.4	0.4		
Max Fillet Rad r$_2$ mm	0.2	0.4		

Tolerances	Ød$_1$	ØD$_1$	ØD$_2$	L$_1$	L$_2$
mm	f9	H11	H11	+0.2 -0	+0.2 -0

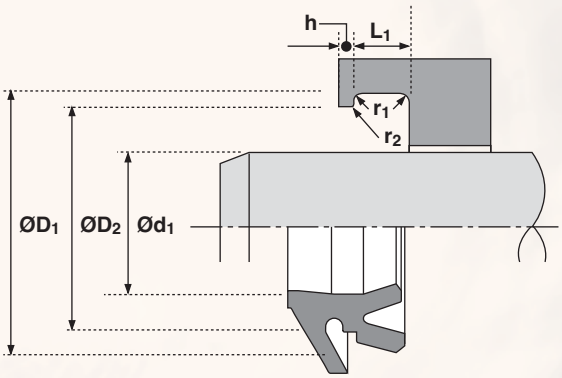

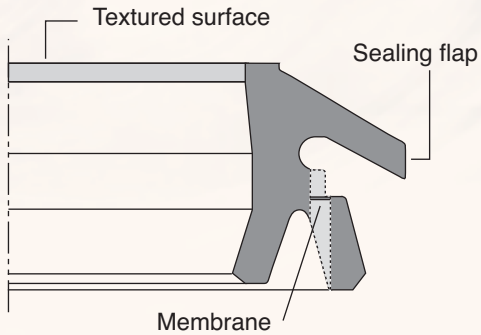

Design

The Hallite 846 wiper is designed to exclude dirt and moisture from entering the cylinder and to collect traces of fluid passing the rod seal.

One special feature of the wiper design are the thin membranes which burst when excessive fluid pressure is trapped between the wiper and the rod seal and prevent the wiper being forced out of its housing. After release of this pressure, the membranes close to protect against contamination from the outside. This feature removes the requirement for an expensive vent hole in the gland.

A second feature is the sealing flap on the wiping lip that completely seals the metal housing groove, preventing the ingress of dirt and moisture around the outside diameter of the wiper.

Precision moulded in Hallite's high performance polyurethane, Hythane® 181, for maximum wear resistance and temperature range, the wiper is designed to remove lightly adhered dirt, dust and moisture from the rod.

Features

- **Twin lip – no leakage**
- **Trapped pressure automatically released through bursting membranes**
- **No push out of the wiper through build up of pressure**
- **No gland vent hole necessary**
- **Sealing flap protects against ingress of dirt and moisture around the outside diameter**

846

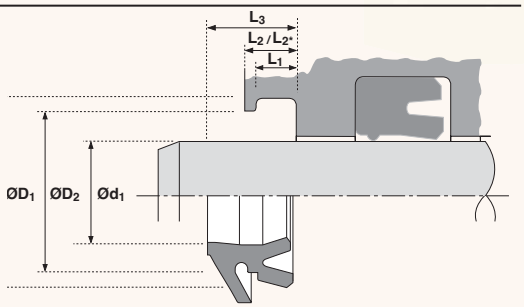

Ød1	TOL f9	ØD1	TOL H11	ØD2	TOL H11	L1 +0.2 - 0	L2 +0.2 - 0	L2* +0.2 - 0	L3	PART No.
24	-0.020 -0.072	32.0	+0.16 +0.00	30.0	+0.16 +0.00	4.0	5.0	6.0	8.7	4764400
25	-0.020 -0.072	33.0	+0.16 +0.00	31.0	+0.16 +0.00	4.0	5.0	6.0	8.7	4556600
26	-0.020 -0.072	34.0	+0.16 +0.00	32.0	+0.16 +0.00	4.0	5.0	6.0	8.7	4588700
28	-0.020 -0.072	36.0	+0.16 +0.00	34.0	+0.16 +0.00	4.0	5.0	6.0	8.7	4556700
30	-0.020 -0.072	38.0	+0.16 +0.00	36.0	+0.16 +0.00	4.0	5.0	6.0	8.7	4584500
32	-0.025 -0.087	40.0	+0.16 +0.00	38.0	+0.16 +0.00	4.0	5.0	6.0	8.7	4568900
36	-0.025 -0.087	44.0	+0.16 +0.00	42.0	+0.16 +0.00	4.0	5.0	6.0	8.7	4588800
40	-0.025 -0.087	48.0	+0.16 +0.00	46.0	+0.16 +0.00	4.0	5.0	6.0	8.7	4549200
45	-0.025 -0.087	53.0	+0.19 +0.00	51.0	+0.19 +0.00	4.0	5.0	6.0	8.7	4589900
50	-0.025 -0.087	58.0	+0.19 +0.00	56.0	+0.19 +0.00	4.0	5.0	6.0	8.7	4597200
54	-0.030 -0.104	62.0	+0.19 +0.00	60.0	+0.19 +0.00	4.0	5.0	6.0	8.7	4803300
56	-0.030 -0.104	64.0	+0.19 +0.00	62.0	+0.19 +0.00	4.0	5.0	6.0	8.7	4588900
60	-0.030 -0.104	68.0	+0.19 +0.00	66.0	+0.19 +0.00	4.0	5.0	6.0	8.7	4596600
63	-0.030 -0.104	71.0	+0.19 +0.00	69.0	+0.19 +0.00	4.0	5.0	6.0	8.7	4749600
65	-0.030 -0.104	73.0	+0.19 +0.00	71.0	+0.19 +0.00	4.0	5.0	6.0	8.7	4597500
70	-0.030 -0.104	78.0	+0.19 +0.00	76.0	+0.19 +0.00	4.0	5.0	6.0	8.7	4556800
75	-0.030 -0.104	83.0	+0.22 +0.00	81.0	+0.22 +0.00	4.0	5.0	6.0	8.7	4597600
80	-0.030 -0.104	88.0	+0.22 +0.00	86.0	+0.22 +0.00	4.0	5.0	6.0	8.7	4590000
90	-0.036 -0.123	98.0	+0.22 +0.00	96.0	+0.22 +0.00	4.0	5.0	6.0	8.7	4557700
100	-0.036 -0.123	110.0	+0.22 -0.00	107.0	+0.22 -0.00	6.3	8.1		11.7	4723600

NB - The housing length shows options for L_2 and L_2* .
L_2 is the preferred dimension but either can be used.

Hallite
Fenner Advanced Sealing Technologies

OTP®

860

Technical details

	Metric		Inch	
Operating conditions				
Maximum Speed	1.0 m/sec		3.0 ft/sec	
Temperature Range	-40°C +100°C		-40°F +212°F	
Surface roughness	µmRa	µmRt	µinCLA	µinRMS
Dynamic Sealing Face Ød$_1$	0.1 <> 0.4	4 max	4 <> 16	5 <> 18
Static Sealing Face ØD$_1$	1.6 max	10 max	63 max	70 max
Static Housing Faces L$_1$	3.2 max	16 max	125 max	140 max
Chamfers & Radii				
Rod Diameter Ød$_1$ mm	≤ 19	≥ 19		
Min Chamfer C mm	0.5	1.0		
Max Fillet Rad r$_1$ mm	0.4	0.4		
Rod Diameter Ød$_1$ in	< 0.75	≥ 0.75		
Min Chamfer C in	0.020	0.040		
Max Fillet Rad r$_1$ in	0.016	0.016		
Tolerances	Ød$_1$	ØD$_1$	L$_1$ mm	L$_1$ in
	f9	H8	+0.5 -0	+0.020 -0

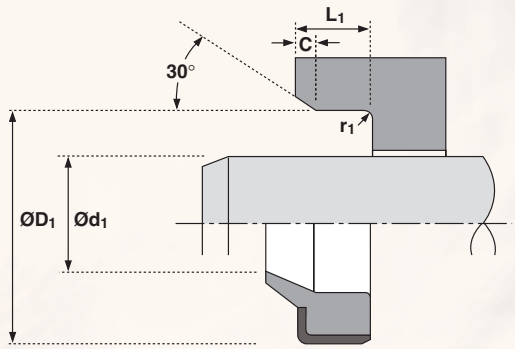

Design

The Hallite 860 is a metal cased wiper, designed to press-fit into open groove housings. Hallite's 860 wiper comprises a precisely trimmed polyurethane wiping element which is securely bonded to a metal case treated with a rust inhibitor. Capable of operating in dirty conditions, the proportions of the polyurethane wiping lip allow it to follow the side movement of the rod and to clear away heavily deposited dirt.

Suitable for light, medium and heavy duty applications, the wiper has been designed to provide ease of installation and offers excellent durability in service. The Hallite 860 offers a range of sizes suitable for ISO 6195 type B housings and a range for standard Asian housings.

Features

- **Ease of assembly**
- **Long life**
- **Precision trimmed wiping lip**
- **Metal case treated with a rust inhibitor**
- **Wide range of application uses**
- **Range includes ISO & standard Asian housings**

NB: Part numbers suffixed by "†" are designed for Asian housings.

Part numbers suffixed by "‡" indicate housing sizes to meet ISO 6195 type B.

860

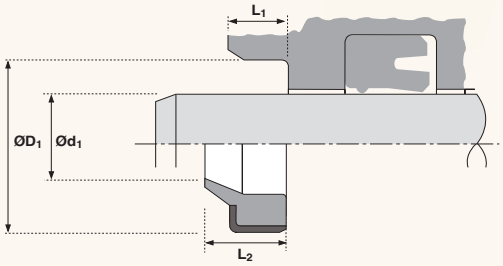

Ød1	TOL f9	ØD1	TOL H8	L1 +0.5 - 0	L2	PART No.
15	-0.016 -0.059	25	+0.033 +0.000	5.0	7.0	6950000
16	-0.016 -0.059	22	+0.033 +0.000	3.0	4.0	6950010
18	-0.016 -0.059	28	+0.033 +0.000	5.0	7.0	6950020
20	-0.020 -0.072	30	+0.033 +0.000	5.0	8.0	6950030
25	-0.020 -0.072	35	+0.039 +0.000	5.0	8.0	6950040
25	-0.020 -0.072	37	+0.039 +0.000	6.0	9.0	6950050†
28	-0.020 -0.072	38	+0.039 +0.000	5.0	8.0	6950060
30	-0.020 -0.072	40	+0.039 +0.000	5.0	8.0	6950070
30	-0.020 -0.072	42	+0.039 +0.000	6.0	9.0	6950080†
32	-0.025 -0.087	42	+0.039 +0.000	5.0	8.0	6950090
35	-0.025 -0.087	45	+0.039 +0.000	7.0	10.0	6950100
35	-0.025 -0.087	47	+0.039 +0.000	7.0	10.0	6950110†
38	-0.025 -0.087	48	+0.039 +0.000	7.0	10.0	6950470
40	-0.025 -0.087	50	+0.039 +0.000	7.0	10.0	6950120‡
40	-0.025 -0.087	52	+0.046 +0.000	7.0	10.0	6950130†
45	-0.025 -0.087	55	+0.046 +0.000	7.0	10.0	6950140‡
45	-0.025 -0.087	57	+0.046 +0.000	7.0	10.0	6950150†
50	-0.025 -0.087	60	+0.046 +0.000	7.0	10.0	6950160‡
50	-0.025 -0.087	62	+0.046 +0.000	7.0	10.0	6950170†
55	-0.030 -0.104	65	+0.046 +0.000	7.0	10.0	6950180
55	-0.030 -0.104	69	+0.046 +0.000	8.0	11.0	6950190†
55	-0.030 -0.104	70	+0.046 +0.000	7.0	10.0	6667689
60	-0.030 -0.104	70	+0.046 +0.000	7.0	10.0	6950200
60	-0.030 -0.104	74	+0.046 +0.000	8.0	11.0	6950210†

Ød1	TOL f9	ØD1	TOL H8	L1 +0.5 - 0	L2	PART No.
63	-0.030 -0.104	73	+0.046 +0.000	7.0	10.0	6667690‡
65	-0.030 -0.104	75	+0.046 +0.000	7.0	10.0	6950220
65	-0.030 -0.104	79	+0.046 +0.000	8.0	11.0	6950230†
70	-0.030 -0.104	80	+0.046 +0.000	7.0	10.0	6950240‡
70	-0.030 -0.104	84	+0.054 +0.000	8.0	11.0	6950250†
75	-0.030 -0.104	85	+0.054 +0.000	7.0	10.0	6950260
75	-0.030 -0.104	89	+0.054 +0.000	8.0	11.0	6950270†
80	-0.030 -0.104	90	+0.054 +0.000	7.0	10.0	6950280‡
80	-0.030 -0.104	94	+0.054 +0.000	8.0	11.0	6950290†
85	-0.036 -0.123	95	+0.054 +0.000	7.0	10.0	6950300
85	-0.036 -0.123	99	+0.054 +0.000	8.0	11.0	6950310†
90	-0.036 -0.123	100	+0.054 +0.000	7.0	10.0	6950320‡
90	-0.036 -0.123	104	+0.054 +0.000	8.0	11.0	6950330†
95	-0.036 -0.123	109	+0.054 +0.000	8.0	11.0	6950340†
100	-0.036 -0.123	110	+0.054 +0.000	7.0	10.0	6950350
100	-0.036 -0.123	114	+0.054 +0.000	8.0	11.0	6950360†
105	-0.036 -0.123	121	+0.063 +0.000	9.0	12.0	6950370†
110	-0.036 -0.123	120	+0.054 +0.000	7.0	10.0	6950380
110	-0.036 -0.123	126	+0.063 +0.000	9.0	12.0	6950390†
115	-0.036 -0.123	131	+0.063 +0.000	9.0	12.0	6950400†
120	-0.036 -0.123	130	+0.063 +0.000	7.0	10.0	6950410
120	-0.036 -0.123	136	+0.063 +0.000	9.0	12.0	6950420†
130	-0.043 -0.143	146	+0.063 +0.000	9.0	12.0	6950430†
140	-0.043 -0.143	160	+0.063 +0.000	10.0	14.0	6950440†

860

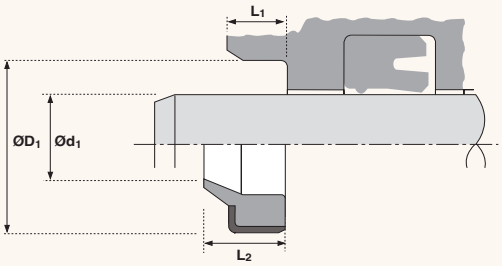

Ød1	TOL f9	ØD1	TOL H8	L1 +0.5 - 0	L2	PART No.
150	-0.043 -0.143	170	+0.063 +0.000	10.0	14.0	6950450†

Ød1	TOL f9	ØD1	TOL H8	L1 +0.5 - 0	L2	PART No.
160	-0.043 -0.143	180	+0.063 +0.000	10.0	14.0	6950460†

Hallite
Fenner Advanced Sealing Technologies

OTP®

862

Technical details

	Metric		Inch	
Operating conditions				
Maximum Speed	1.0 m/sec		3.0 ft/sec	
Temperature Range	-40°C +100°C		-40°F +212°F	
Surface roughness	µmRa	µmRt	µinCLA	µinRMS
Dynamic Sealing Face Ød$_1$	0.1 <> 0.4	4 max	4 <> 16	5 <> 18
Static Sealing Face ØD$_1$	1.6 max	10 max	63 max	70 max
Static Housing Faces L$_1$	3.2 max	16 max	125 max	140 max
Chamfers & Radii				
Min Chamfer C in	0.040			
Max Fillet Rad r$_1$ in	0.016			
Tolerances	Ød$_1$	ØD$_1$	L$_1$	
in	f9	H8	+0.020 -0	

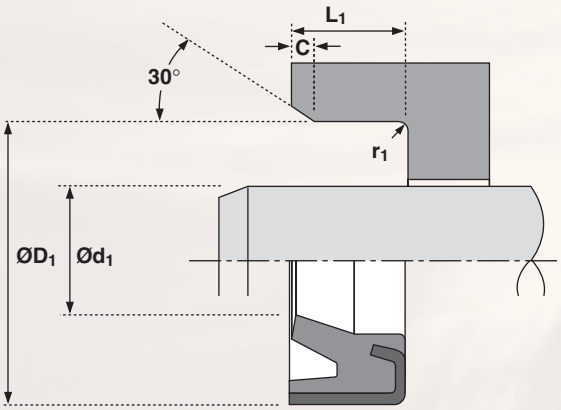

Design

The Hallite 862 is a metal cased wiper, designed to press-fit into open groove housings. Hallite's 862 comprises a precisely trimmed polyurethane wiping element which is securely bonded to a metal case treated with a rust inhibitor. Capable of operating in dirty conditions, the proportions of the polyurethane wiping lip allow it to follow the side movement of the rod and to clear away heavily deposited dirt.

Suitable for light, medium and heavy duty applications, the wiper has been designed to provide ease of installation and offers excellent durability in service.

The Hallite 862 offers a range of sizes suitable for standard American inch housings.

Features

- **Ease of assembly**
- **Long life**
- **Precision trimmed wiping lip**
- **Metal case treated with a rust inhibitor**
- **Wide range of application uses**

Hallite
Fenner Advanced Sealing Technologies

OTP®

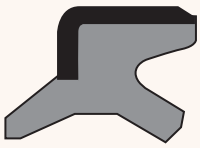

864

Technical details

	Metric		Inch	
Operating conditions				
Maximum Speed	1.0 m/sec		3.0 ft/sec	
Temperature Range	-45°C +110°C		-50°F +230°F	
Surface roughness	µmRa	µmRt	µinCLA	µinRMS
Dynamic Sealing Face Ød$_1$	0.1 <> 0.4	4 max	4 <> 16	5 <> 18
Static Sealing Face ØD$_1$	1.6 max	10 max	63 max	70 max
Static Housing Faces L$_1$	3.2 max	16 max	125 max	140 max
Chamfers & Radii				
Rod Diameter Ød$_1$ mm	≤ 19	≥ 19		
Min Chamfer C mm	0.5	1.0		
Max Fillet Rad r$_1$ mm	0.4	0.4		
Tolerances	Ød$_1$	ØD$_1$	L$_1$ mm	
	f9	H8	+0.5 -0	

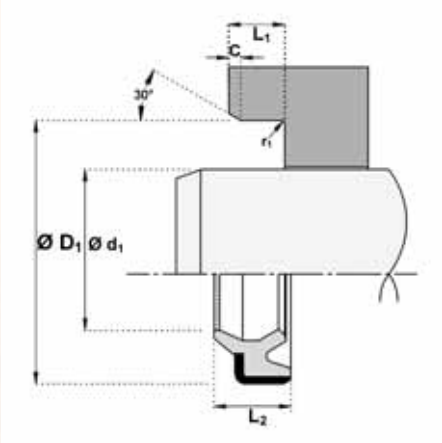

Design

The Hallite 864 is a double lipped metal cased wiper, designed to press-fit into open groove housings. Hallite's 864 wiper comprises a specially textured polyurethane wiping lip which is securely bonded to a nitrided metal case, eliminating the potential for rust. Opposite the wiping lip are two sealing lips accurately produced and proportioned to collect the fluid passing the rod seal. Capable of operating in dirty conditions, the proportions of the polyurethane wiping lip allow it to follow the side movement of the rod and to clear away heavily deposited dirt. The Hallite 864 wiper is designed for use with venting U-rings such as the Hallite 663 rod seal.

Suitable for light, medium and heavy duty applications, the wiper has been designed to provide ease of installation and offers excellent durability in service.

Features

- **Ease of assembly**
- **Long life**
- **Textured wiping lip minimising oil transfer**
- **Nitrided metal case**
- **Wide range of application uses**

864

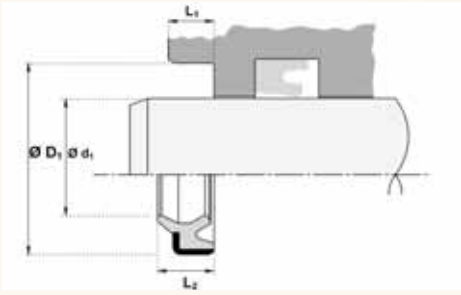

Ød1	TOL f9	ØD1	TOL H8	L1 +0.5 - 0	L2	PART No.
25	-0.020 -0.072	35	+0.039 +0.000	5.0	8.0	4680506
30	-0.020 -0.072	40	+0.039 +0.000	5.0	8.0	4680606
30	-0.020 -0.072	42	+0.039 +0.000	6.0	9.0	4680706
35	-0.025 -0.087	45	+0.039 +0.000	7.0	10.0	4680806
35	-0.025 -0.087	47	+0.039 +0.000	7.0	10.0	4680906
40	-0.025 -0.087	50	+0.039 +0.000	5.0	8.0	4681006
40	-0.025 -0.087	52	+0.046 +0.000	7.0	10.0	4681106
45	-0.025 -0.087	55	+0.046 +0.000	7.0	10.0	4681206
45	-0.025 -0.087	57	+0.046 +0.000	7.0	10.0	4681306
50	-0.025 -0.087	62	+0.046 +0.000	7.0	10.0	4680206
55	-0.030 -0.104	69	+0.046 +0.000	8.0	11.0	4681406
60	-0.030 -0.104	74	+0.046 +0.000	8.0	11.0	4681506
65	-0.030 -0.104	79	+0.046 +0.000	8.0	11.0	4681606
70	-0.030 -0.104	84	+0.054 +0.000	8.0	11.0	4681706
75	-0.030 -0.104	89	+0.054 +0.000	8.0	11.0	4681806
80	-0.030 -0.104	94	+0.054 +0.000	8.0	11.0	4681906
85	-0.036 -0.123	99	+0.054 +0.000	8.0	11.0	4682006
90	-0.036 -0.123	104	+0.054 +0.000	8.0	11.0	4682106
95	-0.036 -0.123	109	+0.054 +0.000	8.0	11.0	4682206
100	-0.036 -0.123	114	+0.054 +0.000	8.0	11.0	4682306
110	-0.036 -0.123	126	+0.063 +0.000	9.0	12.0	4682406
120	-0.036 -0.123	136	+0.063 +0.000	9.0	12.0	4682506
130	-0.043 -0.143	146	+0.063 +0.000	9.0	12.0	4682606
135	-0.043 -0.143	155	+0.063 +0.000	10.0	14.0	4683506
140	-0.043 -0.143	160	+0.063 +0.000	10.0	14.0	4682706
150	-0.043 -0.143	170	+0.063 +0.000	10.0	14.0	4682806
160	-0.043 -0.143	180	+0.063 +0.000	10.0	14.0	4682906

1.1 Classificazione - *Classification*

Codice *Code*	Profilo *Profile*	Caratteristiche *Characteristics*
SA		Raschiatore stelo con tenuta statica *Rod wiper*
DSI		Raschiatore stelo NBR *Rod wiper NBR*
UP	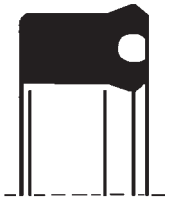	Tenuta stelo e pistone a labbri simmetrici *Symmetric piston rod seal*
KPD	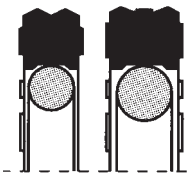	Tenuta pistone doppio effetto *Double acting piston seal*
SAG **RCG**	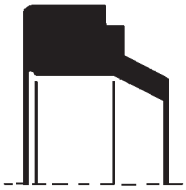	Raschiatore con gradino *Wiper with shoulder*
SD	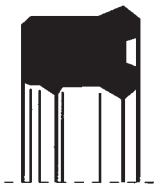	Tenuta stelo *Rod seal*
FE	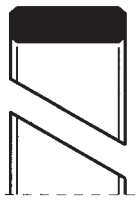	Fasce guida per pistone in resina acetalica *Piston wear band in acetal resin*

1.1 Classificazione - *Classification*

Codice *Code*	Profilo *Profile*	Caratteristiche *Characteristics*
KD		Tenuta pistone asimmetrici *Asymmetric piston seal*
SAB	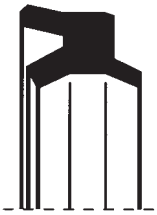	Raschiatore stelo bidirezionale *Double acting wiper*
S	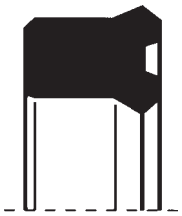	Tenuta stelo *Rod seal*
FI		Fasce guida stelo in resina acetalica *Rod wear band in acetal resin*
GC		Raschiatore stelo con anima in metallo *Rod wiper metal insert NBR*
GA		Raschiatore stelo esterno metallo NBR *Rod wiper metal insert NBR*
SDA		Tenuta stelo con anello antiestrusione *Rod seal with anti-extrusion ring*

1.1 Classificazione - *Classification*

Codice *Code*	Profilo *Profile*	Caratteristiche *Characteristics*
KGD	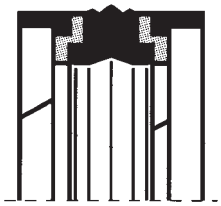	Tenuta pistone doppio effetto con guida *Double acting piston seal with wear ring*
GPP		Guarnizione pistone *Piston seal*
A	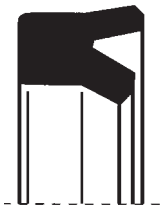	Tenuta stelo asimmetrica *Asymmetric piston rod seal*
KDF	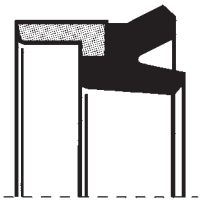	Tenuta pistone con guida *Piston seal with wear ring*
KPDP	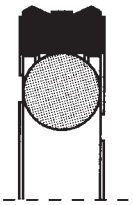	Tenuta su pistone *Piston seal*
FRP		Anello di guida in resina acetalica *Wear ring acetal resin*

GUARNIZIONI PER PNEUMATICA
PNEUMATIC SEALS

PROFILI *PROFILE*	TIPI *TYPES*	DENOMINAZIONE *DESIGNATION*	MATERIALE *MATERIAL*	PRESSIONE *BAR*	TEMPERATURA °C *TEMPERATURE °C*	VELOCITÀ m/s *SPEED m/s*
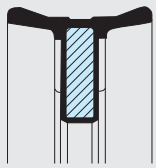	**PKC**	Pistone completo *Complete piston*	**NBR** Metallo *Metal*	10	30 / +100	≤ 1
	RCA	Tenuta stelo combinata per sede aperta *Double acting seal for opened groove*	TPU	≤ 16	35 / +80	≤ 1
	BCG	Tenuta stelo combinata con gradino *Double acting seal with stair*	TPU	≤ 16	35 / +80	≤ 1
	RBP	Tenuta stelo combinata *Double acting seal*	TPU	≤ 16	35 / +80	≤ 1
	RCG	Raschiatore con gradino *Wiper with stair*	TPU	-	35 / +80	≤ 1
	GSP	Guarnizione stelo Rod seal	TPU	≤ 20	35 / +80	≤ 1
	GPP	Guarnizione pistone *Piston seal*	TPU	≤ 20	35 / +80	≤ 1
	AMM	Smorzatore *Damper*	TPU	≤ 20	35 / +80	≤ 1
	MRB	Fascia guida pistone/stelo *Piston/rod guide*	**PTFE** con cariche *with fillers*	-	50 / +200	5

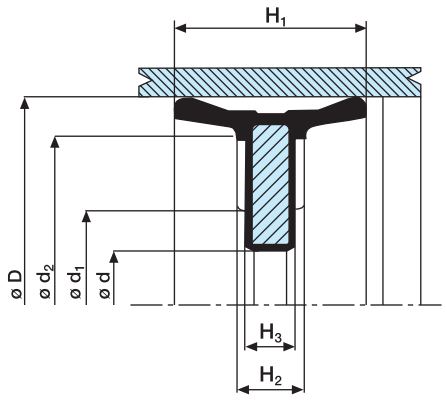

Codice *Code*	Dimensioni - *Dimensions* (mm)						
	D	d	d_1	d_2	H_1	H_2	H_3
PKC 25x 8	25	8	15,5	20	12	6	4
PKC 32x 8	32	8	14	24,5	15	6	4
PKC 40x10	40	10	20	32	18	7	5
PKC 50x10	50	10	20	42	18	7	5
PKC 54x30	54	30	40,5	46	18	6	4
PKC 60x12	60	12	39	51	22	9	5
PKC 63x16	63	16	43	54	22	9	6
PKC 63x14	63	14	32	54	22	9	6
PKC 70x12	70	12	49	60	25	9	6
PKC 75x12	75	12	55	61	25	9	6

Codice *Code*	Dimensioni - *Dimensions* (mm)						
	D	d	d_1	d_2	H_1	H_2	H_3
PKC 80x14	80	14	32	70	25	9	6
PKC 80x16	80	16	55	70	25	9	6
PKC 85x12	85	12	60	75	25	12	7
PKC 90x12	90	12	64	82	24	10	7
PKC 95x12	95	12	69	87	25	10	7
PKC 100x18	100	18	45	90	25	12	9
PKC 100x20	100	20	45	90	25	12	9
PKC 125x18	125	18	45	114	30	12	9
PKC 160x24	160	24	55	149	30	14	11
PKC 200x24	200	24	55	190	30	14	11

Pistone monoblocco composto da una parte interna di metallo e da un rivestimento in gomma vulcanizzato a totale copertura. Particolare di forma simmetrica e con speciali scanalature che consentono l'uniforme distribuzione della pressione su tutta la superficie.

Il profilo dei labbri consente un funzionamento con attrito molto contenuto sia con aria sia con aria lubrificata.

ISTRUZIONI DI MONTAGGIO

Il pistone monoblocco viene montato sullo stelo ed il dado di bloccaggio viene avvitato sull'estremità filettata. Assicurarsi che il bloccaggio sia effettuato perfettamente per evitare un funzionamento difettoso.

Se il cilindro pneumatico ed il pistone completo vengono adeguatamente lubrificati con grasso in fase di montaggio, si rende possibile il funzionamento con aria secca e senz'olio.

Complete pneumatic piston consists, in an inside metal part fully covered with bonded rubber with a particular symmetric shape and with special grooves which allow a regular pressure distribution all over the surface.

The lips profile gives a very low friction and can work with air and lubricated air.

FITTING OPERATIONS

The complete pneumatic piston must be fitted on the rod and the lock nut fixed on the screw. Please be sure of this operation in order to avoid any inconvenience in functioning.

If both cylinder and piston are well lubricated with grease it will work in dry air without oil.

Tenuta stelo combinata per sede aperta
Double acting seal for opened groove

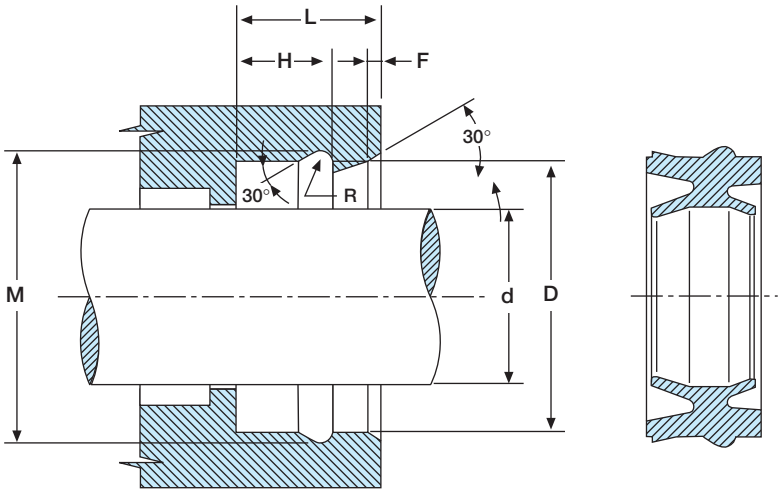

Codice *Code*	Dimensioni - *Dimensions* (mm)						
	d f7	D H10	M ±0,1	L +0,5	H +0,25	F	R
RCA12 20 10,7	12	20	22	13	8,8	1,5	1,1
RCA12 22 10,7	12	22	24	13	8,8	1,5	1,1
RCA14 24 10,7	14	24	26	13	8,8	1,5	1,1
RCA16 26 10,7	16	26	28	13	8,8	1,5	1,1
RCA18 26 10,7	18	26	28	13	8,8	1,5	1,1
RCA20 30 10,7	20	30	32	13	8,8	1,5	1,1
RCA22 32 11,2	22	32	34,5	14	9,4	2	1,4
RCA25 35 11,2	25	35	37,5	14	9,4	2	1,4
RCA30 40 11,2	30	40	42,5	14	9,4	2	1,4
RCA32 42 11,2	32	42	44,5	14	9,4	2	1,4
RCA40 50 11,2	40	50	52,5	14	9,4	2	1,4
RCA45 55 12,2	45	55	58,2	15	10,4	2	1,8
RCA50 60 12,2	50	60	63,2	15	10,4	2	1,8
RCA 63 75 13	63	75	78,2	16	11,4	2	1,8

La guarnizione tipo RCA è stata appositamente sviluppata per il settore pneumatico. Essa svolge contemporaneamente sia la funzione di tenuta che di raschiatore. Grazie alla sua particolare forma, il profilo RCA offre i seguenti vantaggi:

- possibilità di operare sia con aria lubrificata sia con aria secca grazie alla particolare geometria del labbri di tenuta;
- assenza di impurità e corrosione nel circuito pneumatico grazie ad un labbro raschiante rivolto verso l'esterno;
- basso attrito a tutte le pressioni di utilizzo, grazie alla particolare flessibilità dei labbri di tenuta;
- facilità di montaggio;
- elevata durata in esercizio dovuta alle eccellenti caratteristiche antiusura del materiale impiegato.

RCA seal has been particularly developed for pneumatic applications. Its peculiarity is sealing and wiper function. Considering its particular shape RCA profile gives the following advantages:

- *due to the particular lips geometry it works with air and lubricated air;*
- *its wiper lip towards outside avoids dirt and corrosion in the pneumatic circuit;*
- *low friction with any working pressure due to the particular sealing lips flexibility:*
- *easy fitting;*
- *long life working due to the excellent wear characteristic of the compound.*

Tenuta stelo combinata con gradino
Double acting seal with stair

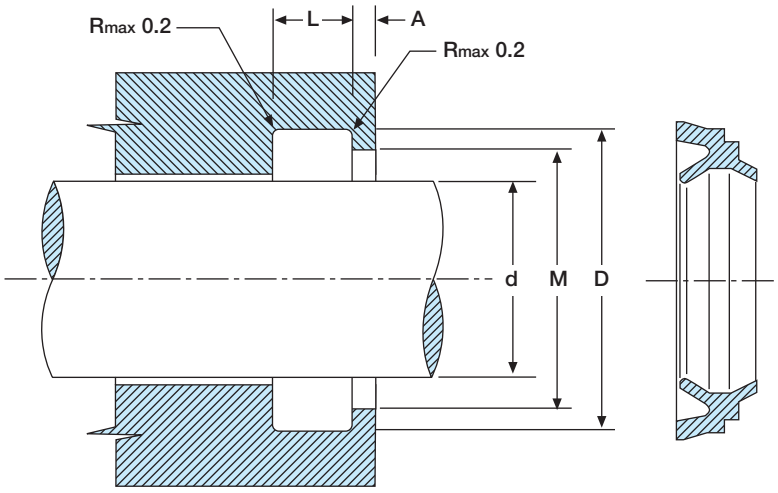

Codice *Code*	Dimensioni - *Dimensions* (mm)				
	d f7	M ±0,1	D H10	L +0,15	A +0,1
BCG 4 8,1 2,8	4	6,7	8,1	3	0,8
BCG 6 11,1 3,3	6	9,1	11,1	3,6	1
BCG 8 14,1 3,3	8	12,1	14,1	3,6	1
BCG 10 16,1 3,8	10	14,1	16,1	4,2	1,2
BCG 12 18,1 3,8	12	15,5	18,1	4,2	1,2
BCG 12 20 3,6	12	18	20	4	2
BCG 14 22 3,6	14	20	22	4	2
BCG 16 24 3,6	16	22	24	4	2
BCG 18 26 3,6	18	24	26	4	2
BCG 20 28 3,6	20	26	28	4	2
BCG 22 30 3,6	22	28	30	4	2
BCG 25 33 3,6	25	31	33	4	2
BCG 30 38 3,6	30	36	38	4	2
BCG 32 40 3,6	32	38	40	4	2
BCG 35 43 3,6	35	41	43	4	2
BCG 36 44 3,6	36	42	44	4	2

Codice *Code*	Dimensioni - *Dimensions* (mm)				
	d f7	M ±0,1	D H10	L +0,15	A +0,1
BCG 40 48 3,6	40	46	48	4	2
BCG 42 50 3,6	42	48	50	4	2
BCG 45 53 3,6	45	51	53	4	2
BCG 50 58 3,6	50	56	58	4	2
BCG 55 63 3,6	55	61	63	4	2
BCG 56 64 3,6	56	62	64	4	2
BCG 60 68 3,6	60	66	68	4	2
BCG 63 71 3,6	63	69	71	4	2
BCG 65 73 3,6	65	71	73	4	2
BCG 70 78 3,6	70	76	78	4	2
BCG 75 83 3,6	75	81	83	4	2
BCG 80 88 3,6	80	86	88	4	2
BCG 85 93 3,6	85	91	93	4	2
BCG 90 98 3,6	90	96	98	4	2
BCG 100 108 3,6	100	106	108	4	2

Il BCG è una guarnizione appositamente sviluppata per il settore pneumatico che svolge contemporaneamente sia la funzione di tenuta sia di raschiatore. Grazie alla sua particolare forma, il profilo BCG offre i seguenti vantaggi:

- sedi di semplice ed economica soluzione con ingombri limitati
- geometria dei labbri di tenuta concepita per operare sia con aria lubrificata sia con aria secca;
- il labbro raschiatore, evita il possibile deposito di impurità che favorirebbe la corrosione;
- basso attrito a tutte le pressioni di utiizzo, grazie alla particolare flessibilità dei labbri di tenuta;
- facilità manuale di montaggio: direttamente in sede chiusa;
- elevata durata in esercizio dovuta alle eccellenti caratteristiche antiusura del materiale impiegato.

BCG seal has been particularly developed for pneumatic applications. Its peculiarity is sealing and wiper function. Considering its particular shape BCG profile gives the following advantages:

- *simple and economic solution grooves with limited space;*
- *lips geometry grants sealing with air and lubricated air;*
- *wiper lip prevents dirt deposit in order to avoid corrosion;*
- *low friction with any working pressure due to the particular sealing lips flexibility;*
- *easy fitting, by hand in closed seats;*
- *long life working due to the excellent wear characteristics of the compound.*

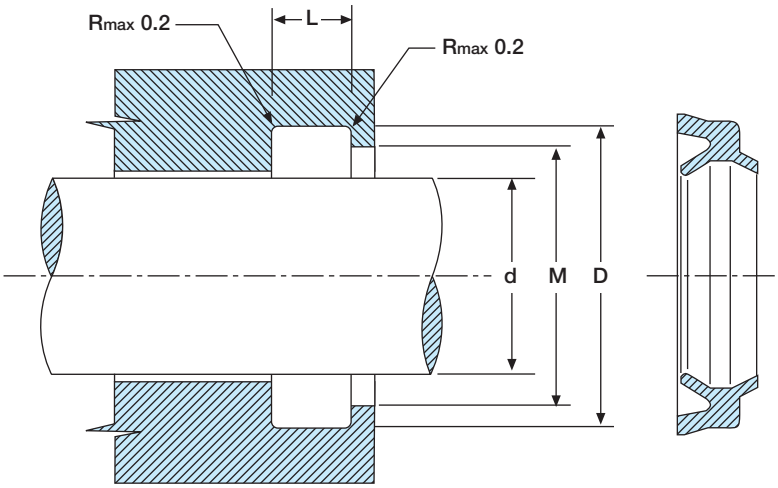

Codice *Code*	Dimensioni - *Dimensions* (mm)			
	d f7	D H10	L +0,2	M
RBP 3 8,8 4	3	8,8	4,5	5
RBP 4 8,8 4	4	8,8	4,5	6
RBP 6 9,2 2,6	6	9,2	3	7,2
RBP 6 10,8 4	6	10,8	4,5	8
RBP 8 11,2 2,5	8	11,5	2,9	9,2
RBP 8 12,8 4	8	12,8	4,5	10
RBP 8 14 4	8	14	4,5	11
RBP 10 14 2,8	10	14	3,2	11,4
RBP 10 16,8 4	10	16,8	4,5	13
RBP 10 18 4,5	10	18	5	14
RBP 12 16,5 3,2	12	16,5	3,7	13,7
RBP 12 18 3,6	12	18	4	14,5
RBP 12 18,6 3,4	12	18,6	3,8	15
RBP 12 20 4,5	12	20	5	16
RBP 12 20 5	12	20	5,5	16
RBP 12 22 5	12	22	6	16
RBP 12 22 6	12	22	7	16
RBP 14 20 3,6	14	20	4	16,5
RBP 14 22 4,5	14	22	5	18
RBP 14 24 5	14	24	6	18
RBP 15 22 3,6	15	22	4	19
RBP 16 22 3,6	16	22	4	18,5
RBP 16 24 4,5	16	24	5	19
RBP 16 26 5	16	26	6	20
RBP 18 24 3,6	18	24	4	20,5

Codice *Code*	Dimensioni - *Dimensions* (mm)			
	d f7	D H10	L +0,2	M
RBP 18 26 4,5	18	26	5	21
RBP 18 28 5	18	28	6	22
RBP 20 26 3,6	20	26	4	22,5
RBP 20 28,6 4,9	20	28,6	5,3	23
RBP 20 30 6	20	30	7	24
RBP 22 28 3,6	22	28	4	24,5
RBP 22 32 6	22	32	7	26
RBP 25 31 3,6	25	31	4	27,5
RBP 25 33,6 4,8	25	33,6	5,3	28
RBP 25 35 6	25	35	7	29
RBP 28 38 6	28	38	7	32
RBP 30 38 4,5	30	38	5	33
RBP 30 38,6 4,9	30	38,6	5,3	33
RBP 30 40 6	30	40	7	34
RBP 32 40 4,5	32	40	5	35
RBP 32 42 6	32	42	7	36
RBP 35 45 6	35	45	7	39
RBP 36 44 4,5	36	44	5	39
RBP 36 46 6	36	46	7	40
RBP 40 50 6	40	50	7	44
RBP 45 53 4,5	45	53	5	48
RBP 45 55 6	45	55	7	49
RBP 50 62 7,5	50	62	8,5	55
RBP 70 80 5,3	70	80	6	75

L'RBP è una guarnizione appositamente sviluppata per il settore pneumatico, svolge contemporaneamente sia la funzione di tenuta sia di raschiatore. Grazie alla sua particolare forma, il profilo RBP offre i seguenti vantaggi:

- sedi di semplice ed economica soluzione con ingombri limitati;
- geometria dei labbri di tenuta concepita per operare sia con aria lubrificata sia con aria secca;
- il labbro raschiatore evita il possibile deposito di impurità che favorirebbe la corrosione;
- basso attrito a tutte le pressioni di utilizzo grazie alla particolare flessibilità dei labbri di tenuta;
- facilità di montaggio;
- elevata durata in esercizio dovuta alle eccellenti caratteristiche antiusura del materiale impiegato.

RBP seal has been particularly developed for pneumatic applications. Its peculiarity is sealing and wiper function. Considering its particular shape RBP profile gives the following advantages:

- *simple and economic solution grooves with limited space;*
- *lips geometry grants sealing with air and lubricated air;*
- *wiper lip prevents dirt deposit in order to avoid corrosion;*
- *low friction with any working pressure due to the particular sealing lips flexibility;*
- *easy fitting; by hand in closed seats;*
- *long life working due to the excellent wear characteristics of the compound.*

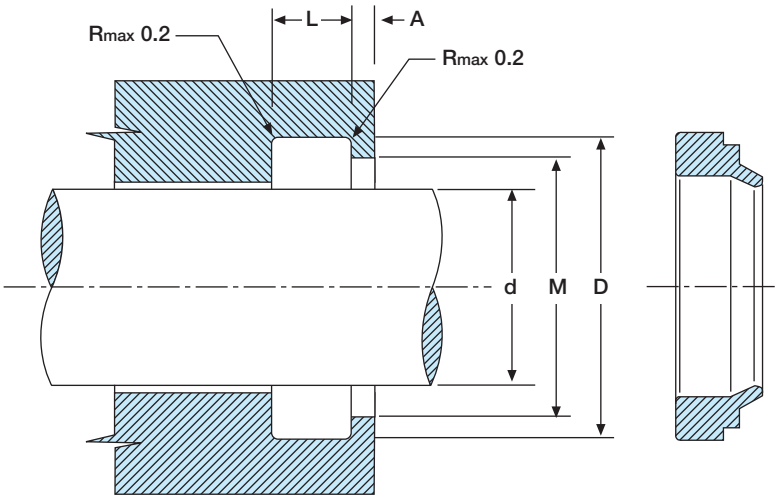

Codice *Code*	Dimensioni - *Dimensions* (mm)				
	d f7	D H10	M ±0,1	L +0,15	A +0,1
RCG 10/a	10	16	14	2,5	1
RCG 10	10	18	16	4	1
RCG 12	12	18	16	2,5	1
RCG 12/a	12	20	18	4	1
RCG 14/a	14	20	18	2,5	1
RCG 14	14	22	20	4	1
RCG 16	16	24	22	4	1
RCG 18	18	26	24	4	1
RCG 20	20	28	26	4	1
RCG 22	22	30	28	4	1
RCG 25	25	33	31	4	1
RCG 28	28	36	34	4	1

Codice *Code*	Dimensioni - *Dimensions* (mm)				
	d f7	D H10	M ±0,1	L +0,15	A +0,1
RCG 30	30	38	36	4	1
RCG 32	32	40	38	4	1
RCG 35	35	43	41	4	1
RCG 36	36	44	42	4	1
RCG 38	38	46	44	4	1
RCG 40	40	48	46	4	1
RCG 42	42	50	48	4	1
RCG 45	45	53	51	4	1
RCG 50	50	58	56	4	1
RCG 55	55	63	61	4	1
RCG 56	56	64	62	4	1
RCG 60	60	68	66	4	1

L'RCG è un raschiatore appositamente sviluppato per il settore pneumatico. Grazie alla sua particolare forma, il profilo RCG offre i seguenti vantaggi:

- sedi di semplice ed economica soluzione con ingombri limitati;
- il labbro raschiatore evita il possibile deposito di impurità che favorirebbe la corrosione;
- basso attrito grazie alla flessibilità ed alla particolare forma arrotondata del labbro di tenuta;
- precarico di montaggio sul diametro esterno per garantire una perfetta tenuta statica;
- facilità di montaggio;
- elevata durata in esercizio dovuta alle eccellenti caratteristiche antiusura del materiale impiegato.

RCG seal has been studied for pneumatic applications. Thanks to its peculiar design RCG can offer the following advantages:

- *simple and economic solution grooves with limited space;*
- *wiper lip prevents dirt deposit in order to avoid corrosion;*
- *low friction due to the particular rounded shape of the lip;*
- *fitting pre-load on outer diameter to ensure static sealing efficiency;*
- *easy fitting;*
- *long life working due to the excellent wear resistance characteristics of the compound.*

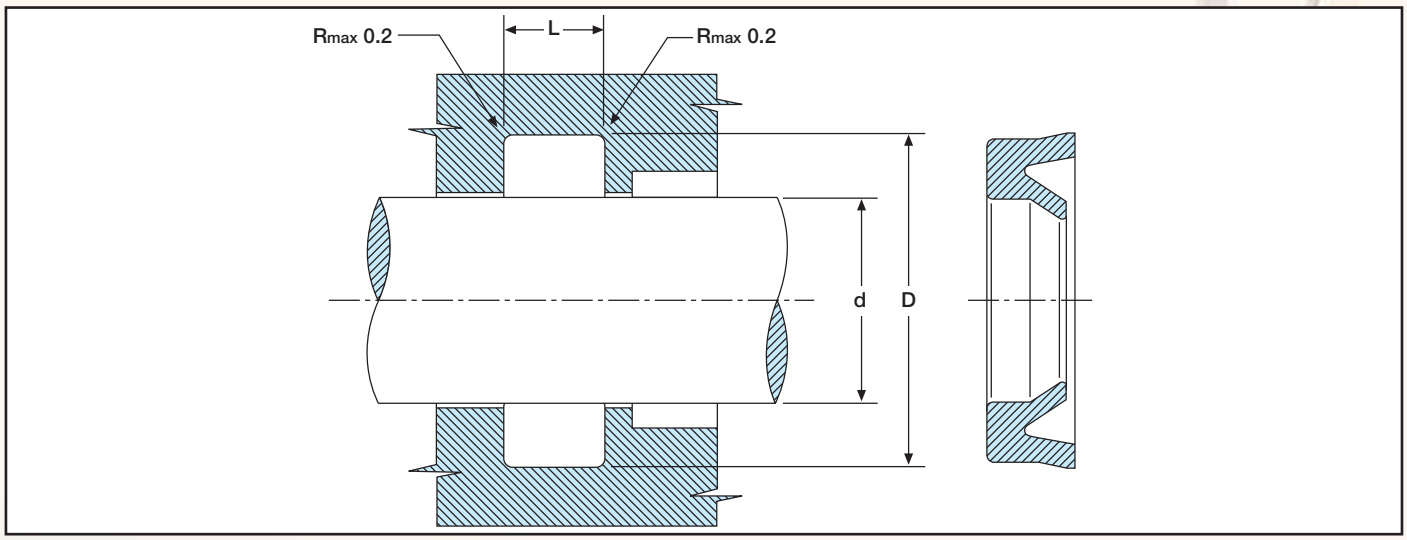

Codice *Code*	Dimensioni-*Dimensions* (mm) d f7	D H10	L +0,2
GSP 4 8 3	4	8	3,5
GSP 5 9 2,5	5	9	3
GSP 6 10 3	6	10	3,5
GSP 6 11 3	6	11	3,5
GSP 6 12 4	6	12	4,5
GSP 7 13 4	7	13	4,5
GSP 8 14 2,55	8	14	3
GSP 8 14 4	8	14	4,5
GSP 8 14 4,5	8	14	5
GSP 8 16 2,55	8	16	3
GSP 8 16 5,5	8	16	6
GSP 10 16 2,55	10	16	3
GSP 10 16 4,5	10	16	5
GSP 10 18 5,5	10	18	6
GSP 12 18 2,55	12	18	3
GSP 12 18 4	12	18	4,5
GSP 12 20 5,5	12	20	6
GSP 12 24 6	12	24	6,5
GSP 14 22 5,5	14	22	6
GSP 15 21 2,55	15	21	3
GSP 16 22 2,55	16	22	3
GSP 16 24 5,5	16	24	6
GSP 17 24 2,55	17	24	3
GSP 18 25 4,5	18	25	5
GSP 18 26 5,5	18	26	6
GSP 20 28 5,5	20	28	6
GSP 22 28 4,3	22	28	5
GSP 22 30 5,5	22	30	6
GSP 25 33 5,5	25	33	6
GSP 25 35 7	25	35	7,5

Codice *Code*	Dimensioni-*Dimensions* (mm) d f7	D H10	L +0,2
GSP 28 36 5,5	28	36	6
GSP 28 38 7	28	38	7,5
GSP 30 38 5,5	30	38	6
GSP 30 40 7	30	40	7,5
GSP 32 40 5,5	32	40	6
GSP 32 42 7	32	42	7,5
GSP 35 43 8	35	43	8,5
GSP 35 45 7	35	45	7,5
GSP 35 45 7,5	35	45	8
GSP 35 45 10	35	45	11
GSP 36 46 7	36	46	7,5
GSP 40 48 5,5	40	48	6
GSP 40 50 7	40	50	7,5
GSP 45 55 7	45	55	7,5
GSP 50 60 7	50	60	7,5
GSP 55 65 7	55	65	7,5
GSP 56 66 7	56	66	7,5
GSP 56 68 7	56	68	7,5
GSP 60 72 8,5	60	72	9,5
GSP 63 73 7	63	73	7,5
GSP 63 75 8,5	63	75	9,5
GSP 65 77 8,5	65	77	9,5
GSP 70 82 8,5	70	82	9,5
GSP 75 87 8,5	75	87	9,5
GSP 80 92 8,5	80	92	9,5
GSP 85 97 8,5	85	97	9,5
GSP 90 102 8,5	90	102	9,5
GSP 95 107 8,5	95	107	9,5
GSP 100 115 10	100	115	11
GSP 160 175 10	160	175	11

La guarnizione a labbro per stelo tipo GSP è stata appositamente sviluppata per il settore pneumatico. Grazie alla sua particolare forma, il profilo GSP offre i seguenti vantaggi:

- sedi con ingombri limitati;
- geometria dei labbri di tenuta concepita per operare sia con aria lubrificata sia con aria secca;
- basso attrito a tutte le pressioni di utilizzo grazie alla particolare flessibilità dei labbri di tenuta;
- facilità di montaggio;
- elevata durata in esercizio dovuta alle eccellenti caratteristiche antiusura del materiale impiegato.

GSP seal has been particularly studied for pneumatic applications. Thanks to its special design GSP can grant the following advantages:

- *seats with limited space;*
- *sealing lips geometry suitable for both air and lubricated air;*
- *low friction with any working pressure due to the particular sealing lips flexibility;*
- *easy fitting;*
- *long life working due to the excellent wear characteristics of the compound.*

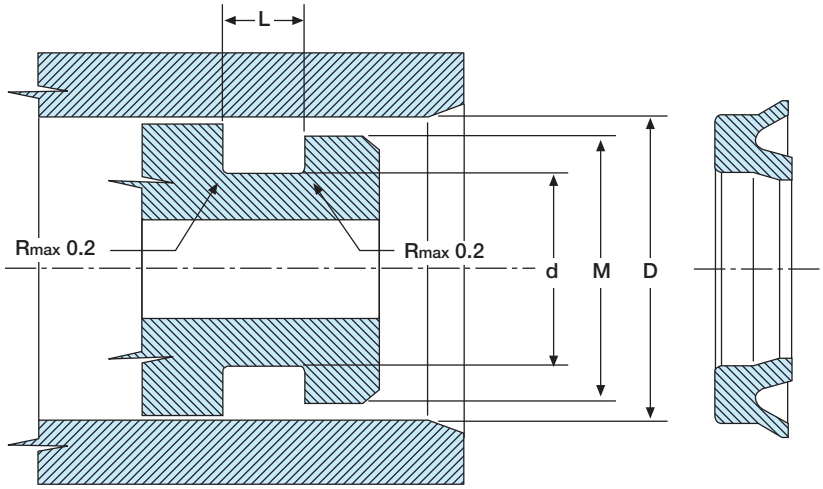

Codice *Code*	Dimensioni-*Dimensions* (mm)			
	d H10	D h9	L +0,2	M[1)]
GPP 6 3 2	6	3	2,5	5,6
GPP 8 4 2,55	8	4	3	5,5
GPP 8 4,8 2,3	8	4,8	2,7	7,6
GPP 10 6 2,55	10	6	3	7,5
GPP 12 7 2,55	12	7	3	9
GPP 13 8 2,55	13	8	3	10
GPP 14 8 2,55	14	8	3	10
GPP 15 9 2,55	15	9	3	11
GPP 16 10 2,55	16	10	3	12
GPP 17 11 2,55	17	11	3	13
GPP 18 12 2,55	18	12	3	14
GPP 20 14 2,55	20	14	3	16
GPP 22 16 2,55	22	16	3	18
GPP 24 18 3,25	24	18	3,5	20
GPP 25 17 5,5	25	17	6	20
GPP 25 19 3,25	25	19	3,5	21
GPP 28 22 3,25	28	22	3,5	24
GPP 30 22 3,25	30	22	3,5	25
GPP 32 24 3,25	32	24	3,5	27
GPP 32 24 5,5	32	24	6	27
GPP 35 27 3,25	35	27	3,5	30
GPP 36 28 3,25	36	28	3,5	31
GPP 38 30 3,25	38	30	3,5	33
GPP 40 30 7	40	30	7,5	34
GPP 40 32 3,25	40	32	3,5	35
GPP 42 30 6	42	30	6,5	34
GPP 42 34 3,25	42	34	3,5	37
GPP 45 37 3,25	45	37	3,5	40
GPP 50 40 7	50	40	7,5	44
GPP 50 42 3,25	50	42	3,5	45

Codice *Code*	Dimensioni-*Dimensions* (mm)			
	d H10	D h9	L +0,2	M[1)]
GPP 52 42 4,25	52	42	4,5	46
GPP 55 45 7	55	45	7,5	49
GPP 58 48 4,25	58	48	4,5	52
GPP 60 50 5	60	50	5,7	54
GPP 60 50 7	60	50	7,5	54
GPP 63 53 4,25	63	53	4,5	57
GPP 63 53 7	63	53	7,5	57
GPP 65 55 7	65	55	7,5	59
GPP 70 58 8,5	70	58	9,5	62
GPP 70 60 7	70	60	7,5	64
GPP 75 63 8,5	75	63	9,5	67
GPP 80 68 8,5	80	68	9,5	72
GPP 80 70 4,25	80	70	4,5	74
GPP 85 73 8,5	85	73	9,5	77
GPP 90 78 8,5	90	78	9,5	82
GPP 90 80 4,25	90	80	4,5	84
GPP 100 88 8,5	100	88	9,5	92
GPP 100 90 4,25	100	90	4,5	94
GPP 110 95 10	110	95	11	100
GPP 120 105 10	120	105	11	110
GPP 125 105 8,25	125	105	8,5	112
GPP 125 110 10	125	110	11	115
GPP 140 120 8,25	140	120	8,5	127
GPP 150 130 8,25	150	130	8,5	137
GPP 160 140 8,25	160	140	8,5	147
GPP 160 145 10	160	145	11	150
GPP 180 160 14	180	160	15	167
GPP 200 180 8,25	200	180	8,5	187
GPP 200 180 14	200	180	15	187

La guarnizione a labbro per pistone tipo GPP è stata appositamente sviluppata per il settore pneumatico. Grazie alla sua particolare forma, il profilo GPP offre i seguenti vantaggi:

- sedi con ingombri limitati;
- geometria dei labbri di tenuta concepita per operare sia con aria lubrificata sia con aria secca;
- basso attrito a tutte le pressioni di utilizzo, grazie alla particolare flessibilità dei labbri di tenuta;
- facilità di montaggio;
- elevata durata in esercizio dovuta alle eccellenti caratteristiche antiusura del materiale impiegato.

GPP seal has been particularly studied for pneumatic applications. Thanks to its special design GPP can grant the following advantages:

- seats *with limited space;*
- *sealing lips geometry suitable for both air and lubricated air;*
- *low friction with any working pressure due to the particular sealing lips flexibility;*
- *easy fitting;*
- *long life working due to the excellent wear characteristics of the compound.*

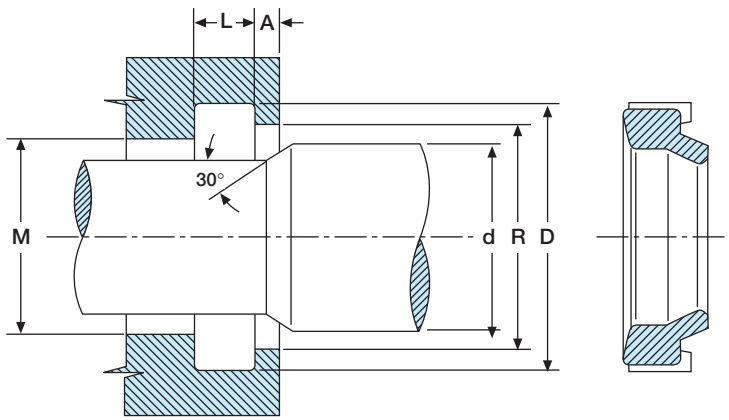

Codice *Code*	Dimensioni - *Dimensions* (mm)					
	d h10	**D** H11	**M** H11	**R** H11	**L** ±0,1	**A** +0,2
AMM 6 10	6	10	6,5	8	3,7	2
AMM 8 11,6	8	11,6	8,5	10	3,3	2
AMM 9,5 15	9,5	15	10	12	4,5	2
AMM 10 18	10	18	11	15	7	2
AMM 12 18	12	18	13	15,5	4,8	2
AMM 12 20	12	20	13	17	7	2
AMM 14 20	14	20	15	17,5	7	2
AMM 14 22	14	22	15	19	7	2
AMM 16 24	16	24	17	21	7	2
AMM 18 26	18	26	19	23	7	2
AMM 20 28	20	28	21	24	7	2
AMM 22 30	22	30	23	26	7	2
AMM 25 33	25	33	26	29	7	2
AMM 28 36	28	36	29	32	7	2
AMM 30 40	30	40	31,5	35	7	2
AMM 32 42	32	42	33,5	37	7	2
AMM 36 46	36	46	37,5	41	7	2
AMM 40 50	40	50	41,5	45	7	2
AMM 50 60	50	60	51,5	55	7	2

L'anello smorzatore AMM è stato appositamente sviluppato per l'impiego nei sistemi di fine corsa dei cilindri pneumatici.

The damper seal has been studied to be fitted on brake systems end stroke of pneumatic cylinders.

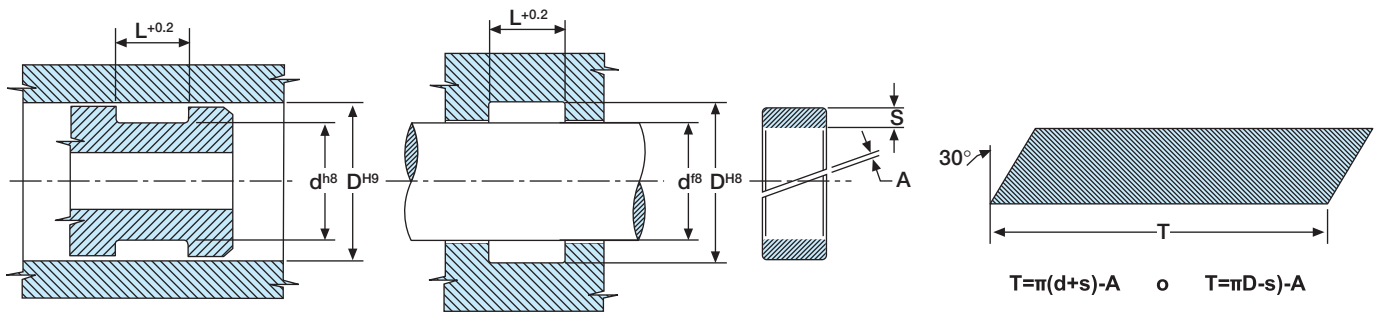

Codice *Code*	Dimensioni - *Dimensions* (mm)		
	s	L	A
MRB 15032	1,5	3,2	1,0 ÷ 1,5
MRB 15062	1,5	6,2	1,5 ÷ 3,5
MRB 15063	1,5	6,3	1,5 ÷ 3,5
MRB 15150	1,5	15,0	4,0 ÷ 8,0
MRB 15250	1,5	25,0	6,0 ÷ 8,0
MRB 20042	2,0	4,2	1,0 ÷ 2,0
MRB 20063	2,0	6,3	1,5 ÷ 3,5
MRB 20081	2,0	8,1	2,0 ÷ 5,0
MRB 20097	2,0	9,7	2,0 ÷ 5,0
MRB 20150	2,0	15,0	4,0 ÷ 8,0
MRB 20200	2,0	20,0	4,5 ÷ 8,0
MRB 20250	2,0	25,0	6,0 ÷ 8,0
MRB 20300	2,0	30,0	6,0 ÷ 9,0
MRB 25042	2,5	4,2	1,0 ÷ 2,0
MRB 25056	2,5	5,6	1,0 ÷ 2,0
MRB 25063	2,5	6,3	1,5 ÷ 3,5
MRB 25081	2,5	8,1	2,0 ÷ 5,0

Codice *Code*	Dimensioni - *Dimensions* (mm)		
	s	L	A
MRB 25097	2,5	9,7	2,0 ÷ 6,0
MRB 25120	2,5	12,0	2,0 ÷ 6,0
MRB 25125	2,5	12,5	2,0 ÷ 6,0
MRB 25128	2,5	12,8	2,0 ÷ 6,0
MRB 25150	2,5	15,0	4,0 ÷ 8,0
MRB 25200	2,5	20,0	4,5 ÷ 8,0
MRB 25250	2,5	25,0	6,0 ÷ 8,0
MRB 25300	2,5	30,0	6,0 ÷ 9,0
MRB 30097	3,0	9,7	2,0 ÷ 6,0
MRB 30128	3,0	12,8	2,0 ÷ 6,0
MRB 30150	3,0	15,0	4,0 ÷ 8,0
MRB 30192	3,0	19,2	4,0 ÷ 8,0
MRB 30200	3,0	20,0	4,5 ÷ 8,0
MRB 30250	3,0	25,0	6,0 ÷ 8,0
MRB 30300	3,0	30,0	6,0 ÷ 9,0
MRB 30350	3,0	35,0	6,0 ÷ 9,0
MRB 30400	3,0	40,0	6,0 ÷ 9,0

GUARNIZIONI PTFE ENERGIZZATE DA MOLLA

SPRING ENERGIZED PTFE SEALS

Queste guarnizioni sono composte da un elemento polimerico, ad elevate prestazioni, e da un elemento energizzante che può essere una molla metallica oppure un O-ring elastomerico e sono usate sia per impieghi statici che dinamici.

These seals consist of an high performance polymer jacket with an energized element which can be a metal spring or an elastomeric O-ring, and are used in static and dynamic applications.

Condizioni di impiego

Variano in funzione dell'applicazione:
- statica, da 10-8 torr fino a 900 bar
- dinamica, da 10-6 torr fino a 600 bar
- temperatura, da -196°C a +300°C a seconda del materiale polimerico impiegato. In ogni caso solo un valore per volta può raggiungere il suo massimo.

Working conditions

According to different applications:
- *static, from 10-8 torr to 900 bar*
- *dynamic, from 10-6 torr to 600 bar*
- *temperature, from -196°C to +300°C depending on the polymer used. In any case only one value by time can reach his maximum.*

Profili e molle

Esistono molti profili standard e personalizzazioni per meglio soddisfare ogni singola esigenza. Si possono identificare due gruppi principali a seconda del tipo di molla energizzante che può essere:

- **tonda a spirale:** usata per tenute stelo, per pistone oltre che per tenute frontali; normalmente utilizzata quando è richiesto un carico medio alto;
- **lamellare a "V":** per movimenti rotanti, per un basso attrito o quando si ha l'esigenza di scaricare sovrappressioni che si accumulassero nel retro della guarnizione.

Profiles and springs

There are many different standard profiles and also special ones to meet all requirements.
Two main groups can be identified depending on the energized spring:

- ***coil spring:*** *used for piston, rod seals and face seals; generally used when a medium-high load is requested;*
- ***"V" spring:*** *used for rotating applications where low friction is needed, possible over pressure on back of the seal to be eliminated.*

Materiali standard PTFE e caratteristiche

Standard PTFE materials and properties

Materiale e caratteristiche	*Materials and properties*
PTFE vergine - Resistenza chimica pressochè universale, ampio campo di temperatura, basso attrito sia dinamico che di primo distacco, bassa resistenza all'abrasione, adatto per impiego a contatto con prodotti alimentari.	***Virgin PTFE*** *- Almost universal chemical resistance over a wide temperature range, low friction dynamic and starting, limited wear resistance, suitable for food applications.*
PTFE carbo-grafite - Eccellenti materiali per applicazioni con scarsa lubrificazione e carichi gravosi. Ottimo anche con acqua e vapore.	***Carbon graphite PTFE*** *- Excellent material for applications with limited lubrification and severe conditions.* *Very good also for water and steam.*
PTFE EKNOL - PTFE caricato con polimmide. Superiore resistenza alle alte temperature, non abrasivo, raccomandato per applicazioni dinamiche con superfici non indurite (esempio: acciaio inox).	***PTFE EKNOL*** *- Polymer filled PTFE, better resistance to high temperatures, non abrasive, recommended for dynamic applications with non-hardened running surfaces (example: stainless steel).*
PTFE bronzo - Eccellente resistenza all'usura, limitata resistenza chimica.	***Bronze filled PTFE*** *- Excellent resistance to wear, limited chemical resistance.*
PTFE con speciali additivi - PTFE modificato per migliorarne la resistenza all'usura e ridurre la permeabilità ai gas.	***PTFE with special additivies*** *- Modified PTFE to improve wear resistance and reduce gas permeability.*
PTFE caricato carbone - Eccellente materiale per uso generale, non è abrasivo, compatibile con molti prodotti chimici; ottimo con acqua e fluidi lubrificanti.	***Carbon filled PTFE*** *- Excellent material for general purpose, good resistance to abrasion, suitable with many chemical products, very good for water and lubricants.*
PTFE caricato vetro e additivato con bisolfuro di molibdeno - Ottima resistenza all'usura, raccomandato per impieghi ad alte pressioni, compatibile con acqua e vapore, sconsigliato l'impiego su superfici non indurite.	***Glass / molybdenum filled PTFE*** *- Excellent wear resistance, suitable for high pressure applications, water and vacuum, no good for non-hardened surfaces.*
PTFE caricato vetro con additivi speciali - Materiale più soffice, migliore prestazione alle basse pressioni, ma sempre molto abrasivo. Richiede superfici indurite.	***Glass filled PTFE with special additives*** *- Softer grade, better performance with low pressure, more abrasive, requires harder running surfaces.*
UHMW - Buona resistenza chimica e buona resistenza all'usura, particolarmente usato nel settore alimentare. Ottimo comportamento alle basse temperature, ma limitato alle alte; massima temperatura per impieghi continui: 90°.	***UHMW*** *- Good chemical resistance, good wear resistance, particularly used in food industry. Very good with low temperature, not suitable for high temperature; max temperature in continuous service: 90°.*

Materiale delle molle

Anche i materiali delle molle possono cambiare in funzione delle applicazioni.

Materiali raccomandati per le molle:

- Acciaio Inox AISI 301/302
- Nickel-Cromo (Hastelloy) UNS N 10276
- Cobalto Nickel-Cromo-Molibdeno (Elgiloy) UNS R 3003
- Nickel-Cromo (Inconel) UNS N 07750

Spring material

Materials can be different according to the applications.

Recommended spring materials:

- *Stainless Steel AISI 301/302*
- *Nickel-Chromium Alloy (Hastelloy) UNS N 10276*
- *Cobalt Nickel-Chromium-Molybdenum (Elgiloy) UNS R 3003*
- *Nickel-Chromium Alloy (Inconel) UNS N 07750*

Tipi

Guarnizione energizzata PTFE con molla a "U" per pistone e stelo

Queste guarnizioni, previste per stelo e pistone per movimenti alternativi ad elevate prestazioni, sono disegnate per semplice effetto.

Types

"U" spring energized PTFE piston and rod seals

These seals for energized piston and rod for reciprocating applications, have high performance and are designed for single acting.

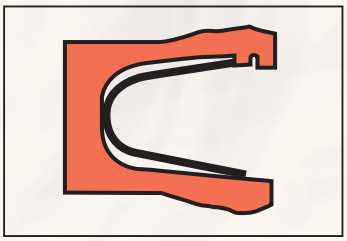

Condizioni d'impiego

Queste guarnizioni possono lavorare fino a 340 bar e con temperature da -80°C fino a +230°C (-112°F fino a +446°F).
Per movimenti alternativi, la velocità max è 14 m/sec.
Per movimenti rotativi lenti od oscillatori max 1 m/sec.

Materiali raccomandati per le guarnizioni

- PTFE VERGINE
- PTFE EKONOL
- PTFE BRONZO
- PFE CARBONE
- PTFE Vetro con Bisolfuro di Molibdeno

Materiale raccomandato per le molle

- Acciaio Inox AISI 301/302

Dimensioni sedi: vedi **Tabella E**

Operating range

These seals can operate at pressure of up to 340 bar and temperatures from -80°C to +230°C (-112°F to +446°F)
For reciprocating applications the max speed is up to 14 m/sec.
For slowly rotating and oscillating applications up to 1 m/sec.

Recommended seals materials

- *VIRGIN PTFE*
- *PTFE EKONOL*
- *BRONZE FILLED PTFE*
- *CARBON FILLED PTFE*
- *Glass / Molybdenum filled PTFE*

Recommended spring materials

- *Stainless Steel 301/302*

Groove sizes: see ***Table E***

Guarnizione energizzata PTFE con molla tonda per pistone e stelo

Coil spring energised PTFE piston and rod seals

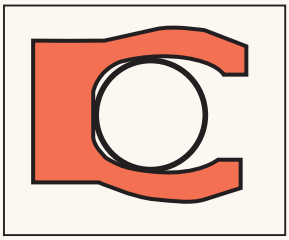

Queste guarnizioni a singolo effetto sono previste per alte pressioni sia come tenuta dinamica sia come tenuta statica.

Condizioni d'impiego

Possono lavorare con pressione fino a 600 bar (8.700 psi) e temperature da
-100°C a +230°C (-148°F fino +446°F).
Per temperature inferiori o superiori a questi valori la molla deve essere studiata.
Vi preghiamo di voler prendere contatto con il ns. Ufficio Tecnico.

Materiali raccomandati per le guarnizioni

- PTFE VERGINE
- PFE CARBONE
- PTFE EKONOL
- PTFE BRONZO

Materiali raccomandati per le molle

- Acciaio Inox AISI 301/302
- Nickel-Cromo
  (Hastelloy) UNS N 10276
- Cobalto Nickel-Cromo-Molibdeno
  (Elgiloy) UNS R 3003
- Nickel-Cromo
  (Inconel) UNS N 07750

Dimensioni sedi: vedi **Tabella E**

These seals are designed for single acting, high pressure for static and dynamic application.

Operating range

They can operate at pressure of up to 600 bar (8.700 psi) and temperatures from
-100°C to +230°C (-148°F to +446°F)
For different (higher/lower) temperatures values, the spring must be especially considered. Please, contact our Technical Department.

Recommended seal materials

- *VIRGIN PTFE*
- *CARBON/GRAPHITE FILLED PTFE*
- *PTFE EKONOL*
- *BRONZE FILLED PTFE*

Recommended spring materials

- *Stainless Steel AISI 301/302*
- *Nickel-Chromium Alloy*
  (Hastelloy) UNS N 10276
- *Cobalt Nickel-Chromium-Molybdenum*
  (Elgiloy) UNS R 3003
- *Nickel-Chromium Alloy*
  (Inconel) UNS N 07750

*Groove sizes: see **Table E***

Guarnizione energizzata PTFE con molla tonda per tenuta frontale

Coil spring energised PTFE face seals

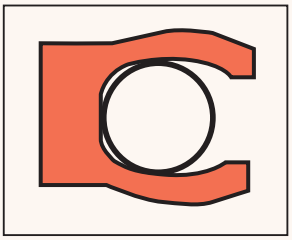

Queste guarnizioni sono utilizzate per applicazioni statiche ed alta pressione. Sono disponibili le due versioni con pressione interna ed esterna.

These seals are designed for high pressure, static applications. They are available for both internal and external fitting.

Condizioni operative

Possono operare a pressione fino a 600 bar (8.700 psi) e temperature da -100C° a +230°C (-148°F fino a +446°F).
Per temperature inferiori o superiori la molla deve essere speciale. Vi preghiamo di voler prendere contatto con il ns. Ufficio Tecnico.

Operating range

Can operate at pressure of up to 600 bar (8.700 psi) and temperatures from -100°C to +230°C (-148°F to + 446°F).
For different temperature (higher/lower) values, the spring must be especially considered. Please, contact our Technical Department.

Materiali raccomandati per le guarnizioni

- PTFE VERGINE
- PTFE CARBOGRAFITE
- PTFE CARBONE

Recommended seal materials

- *VIRGIN PTFE*
- *CARBON/GRAPHITE FILLED PTFE*
- *CARBON FILLED PTFE*

Materiali raccomandati per le molle

- Acciaio Inox AISI 301/302
- Nickel-Cromo (Hastelloy) UNS N 10276
- Cobalto Nickel-Cromo-Molibdeno (Elgiloy) UNS R 3003
- Nickel-Cromo (Inconel) UNS N 07750

Recommended spring materials

- *Stainless Steel AISI 301/302*
- *Nickel-Chromium Alloy (Hastelloy) UNS N 10276*
- *Cobalt Nickel-Chromium-Molybdenum (Elgiloy) UNS R 3003*
- *Nickel-Chromium Alloy (Inconel) UNS N 07750*

Dimensioni sedi: vedi **Tabella E**

*Groove sizes: see **Table E***

Guarnizione energizzata PTFE ad "U" per movimenti rotativi

"U" spring energised PTFE for rotary shaft seals

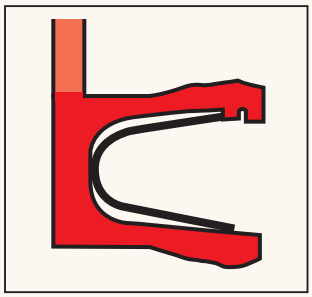

Queste guarnizioni sono utilizzate per movimenti rotativi fino a 15 m/sec. come massimo, ma questo dipende dalla pressione d'esercizio.
La guarnizione può operare da -80° C fino a +200°C (-112°F fino a +392°F)

Materiali raccomandati per le guarnizioni
- PTFE EKONOL
- PTFE CARBONE

Materiali raccomandati per le molle
- Acciaio Inox AISI 301/302

Dimensioni sedi: vedi **Tabella E**

These seals are designed for rotary applications up to max 15 m/sec., depending on working pressure.

The seal can operate at temperature from -80°C to +200°C (-112°F to +392°F)

Recommended seal materials
- *PTFE EKONOL*
- *CARBON FILLED PTFE*

Recommended spring materials
- *Stainless Steel AISI 301/302*

*Groove sizes: see **Table E***

Guarnizione energizzata PTFE con molla tonda per alberi rotanti

Coil spring energised PTFE for rotary shaft seals

Queste guarnizioni sono utilizzate per movimenti rotativi fino a 15 m/sec. come massimo, ma questo dipende dalla pressione d'esercizio.
La guarnizione può operare da -80°C fino a +200°C (-112°F fino a +392°F)

Materiali raccomandati per le guarnizioni
- PTFE EKONOL
- PTFE CARBONE

Materiali raccomandati per le molle
- Acciaio Inox AISI 301/302

Dimensioni sedi: vedi **Tabella E**

These seals are designed for rotary applications up to max 15 m/sec., depending on working pressure.

The seal can operate at temperature from -80°C to +200°C (-112°F to +392°F)

Recommended seal materials
- *PTFE EKONOL*
- *CARBON FILLED PTFE*

Recommended spring materials
- *Stainless Steel AISI 301/302*

*Groove sizes: see **Table E***

Dimensionamento delle sedi stelo/pistone

Grooves sizes rod/piston

Tabella E

Table E

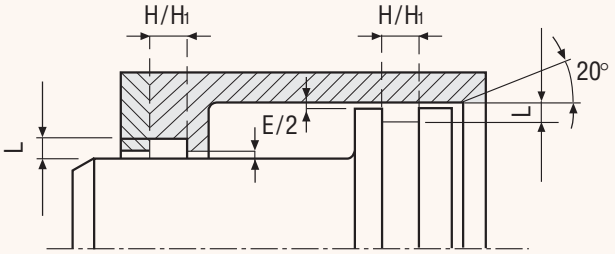

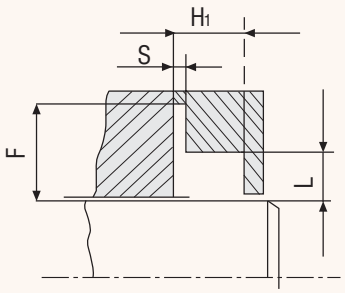

Albero rotante
Rotating shaft

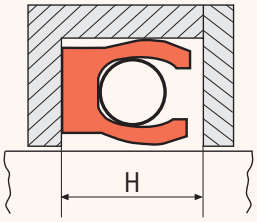

Sede standard
Standard groove

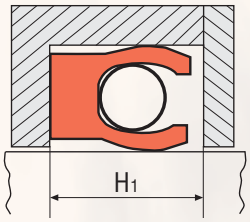

Sede rinforzata
Reinforced groove

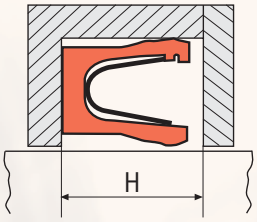

Sede standard
Standard groove

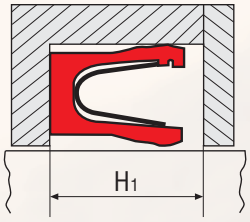

Sede rinforzata
Reinforced groove

Sezione nominale *Nominal section*	L c/s in mm	H 0,3 -0,0	H1 0,3 -0,0	F ± 0,13	S ± 0,05	E NOM	Tolleranza Albero Shaft Tolerance	Diametro minimo delle guarnizioni *Minimum seals diameter*
1/16"	1,42/1,47	2,4	3,8	3,4	0,4	0,1	-0,05	5
3/32"	2,26/2,31	3,6	4,6	4,3	0,6	0,13	-0,05	6
1/8"	3,07/3,12	4,8	6	5,5	0,7	0,15	-0,05	7,5
3/16"	4,72/4,78	7,1	8,5	8,4	0,8	0,18	-0,06	13
1/4"	6,05/6,12	9,5	12,1	11,6	1,2	0,2	-0,07	17

Dimensioni sedi guarnizioni frontali

Grooves sizes face seals

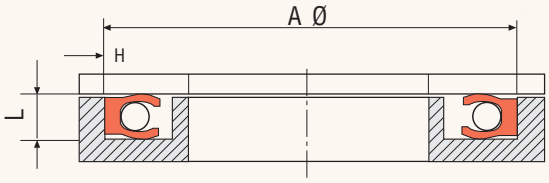

Guarnizione frontale pressione interna
Face seal internal pressure

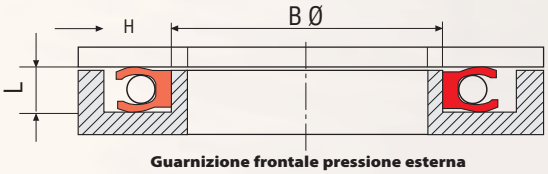

Guarnizione frontale pressione esterna
Face seal external pressure

Sezione nominale *Nominal section*	L c/s in mm	H Min.	Diametro minimo delle guarnizioni *Minimum seals diameter*
1/16"	1,42/1,47	2,4	20
3/32"	2,26/2,31	3,6	20
1/8"	3,07/3,12	4,8	25
3/16"	4,72/4,78	7,1	35
1/4"	6,05/6,12	9,5	50

Guarnizioni per settore criogenico

Queste guarnizioni con molla tonda vengono impiegate nel settore criogenico fino a temperature di -196°C.
Fino a -120°C viene impiegato il PTFE VERGINE con doppia molla coassiale in Elgiloy.
Per temperature sotto questo valore secondo le ultime esperienze acquisite è preferibile l'uso di PTCFE sia per le guarnizioni che per i seggi valvola.

Seals for cryogenic applications

The seals with coil spring are designed for the cryogenic applications up to -196°C.
VERGIN PTFE with double coaxial spring Elgiloy is suggested for temperature up to -120°C.
For temperature under this value, according to the last experiences, it is recommended the PTCFE material for both seals and seats.

GUARNIZIONI TOROIDALI
TOROIDAL SEALS

Costituzione

Gli O-RINGS in gomma sono guarnizioni a sezione rotonda vulcanizzata in stampo, definiti da un diametro interno "D" e da una sezione di corda "T".

Funzionamento

Le guarnizioni devono impedire il trafilamento dei fluidi fra due superfici metalliche e per questo motivo le O-RINGS devono essere compresse radialmente.
Questa forza, sommata a quella del fluido da tenere, aumenta con il crescere della pressione del fluido realizzando una perfetta tenuta.

Structure

The O-RINGS in elastomer have a round shape, vulcanized in tools, they are identified by an inside diameter "D" and a cross section "T".

Working

The O-RINGS must prevent the fluid leakage between two metal surfaces so that they must have a radial compression.
This strength combined with the one of the fluid to be sealed, increased by the pressure, can guarantee a perfect sealing.

Dimensioni

Sizes

Designazione mescole *Types of elastomers*	Norme AS-BS Ø corda *Standard AS-BS Ø section*	Metriche Ø corda *Metric Ø section*	Sms 1586 Ø corda *Sms 1586 Ø section*	AFN Ø corda *AFN Ø section*
NBR FPM EPDM MVQ	1,78	1,00	1,60	1,90
		1,50		
	2,62	2,00	2,40	2,70
		2,50		
	3,53	3,00	3,00	3,60
		3,50		
	5,34	4,00	5,70	5,34
		4,50		
		5,00		
	6,99	6,00	8,40	6,99

Tondino in elastomero estruso

Per applicazioni di tenuta statica è possibile utilizzare O-RINGS giuntati mediante un collante appropriato.
Le dimensioni più comunemente utilizzate sono normalmente disponibili in elastomeri NBR e FPM.

O-Rings vulcanizzate

Quando non esiste l'O-RING con la dimensione desiderata, per applicazioni statiche, possono essere forniti mediante l'utilizzo di corda tonda estrusa e vulcanizzata a caldo sotto vuoto.
Materiali fornibili: NBR-FPM-MVQ-EPDM-FMQ-HNBR.

Elastomer extruded cord

For static applications it is possible to obtain O-RINGS by using an extruded cord joined with an appropriate glue.
The most common sizes in NBR and FPM elastomers are available ex-stock.

Hot vulcanized o-rings

In case of a non standard size, for static applications, O-RINGS can be obtained by using an extruded cord with an hot vulcanized vacuum operation.

Available elastomers: NBR-FPM-MVQ-EPDM-FMQ-HNBR.

Mescole *Compounds*

Tipi *Types*	Durezza *Hardness*	Caratteristiche principali *Main characteristics*	Temperature *Temperatures*
NBR **(elastomero butadiene acrilonitrile)** ***(butadiene-acrylonitrile elastomer)***	70	Buona resistenza ad olii minerali ed ai grassi privi di additivi, clorurati e aromatici. Modesta resistenza agli agenti chimici, alla luce ed all'ossidazione. *Good resistance to mineral oils and greases without additives, chlorinated and aromatics.* *Poor chemical resistance to ageing, weathering and ozone.*	-30°C + 100°C
FPM **(elastomero fluorurato)** ***(fluoroelastomer)***	75	Eccellente resistenza alle alte temperature, ad olii e grassi anche con additivi, solventi, idrocarburi della serie automatica e alifatica. *Excellent resistance to high temperatures, to oils and greases, aromatic and chlorinated hydrocarbons.*	-25°C + 200°C
EPDM **(elastomero etilene propilene)** ***(ethylene propilene elastomer)***	70	Ottima resistenza all'acqua calda e vapore, all'invecchiamento, agli agenti atmosferici. Scarsa resistenza ad olii minerali e grassi. *Very good resistance to hot water and steam, to ageing and weathering. Poor resistance to mineral oils and greases.*	-40°C + 160°C
MVQ **(elastomero siliconico)** ***(silicone elastomer)***	70	Eccellente resistenza alle alte e basse temperature. Ottima elasticità e basso coefficiente di attrito. Eccellente resistenza all' ozono ed all'ossidazione. Medie proprietà meccaniche. *Excellent resistance to hight and low temperatures.* *Excellent flexibility and low friction.* *Excellent resistance to ageing, weathering and ozone.* *Poor tensile and tear strength.*	-60°C + 200°C
FMQ **(elastomero fluorosiliconico)** ***(fluorosilicone elastomer)***	70	Buona resistenza ai carburanti, grassi minerali, olii e olii sintetici. *Good resistance to fuels, mineral greases, oils and synthetic oils.*	-60°C + 180°C
FFKM CHEMRAZ® **(perfluoroelastomero)** ***(perfluoroelastomer)***	80 / 90	Ottima resistenza chimica simile al PTFE, eccellente resistenza al calore. Rispetta norma FDA. *Excellent chemical resistance similar to PTFE, excellent heat resistance.* *Conforms to FDA standard.*	-30°C + 324°C
FEPM FLUORAZ® **(copolimero tetrafluoroetilene e propilene)** ***(tetrafluoroethylene-propilene elastomer)***	78 / 90	Eccellente resistenza al vapore surriscaldato. Rispetta norma FDA. *Excellent resistance to superheated steam.* *Conforms to FDA standard.*	-5°C + 260°C

Finiture sedi

Groove surface finish

Tenute statiche frontali

Static and face sealing

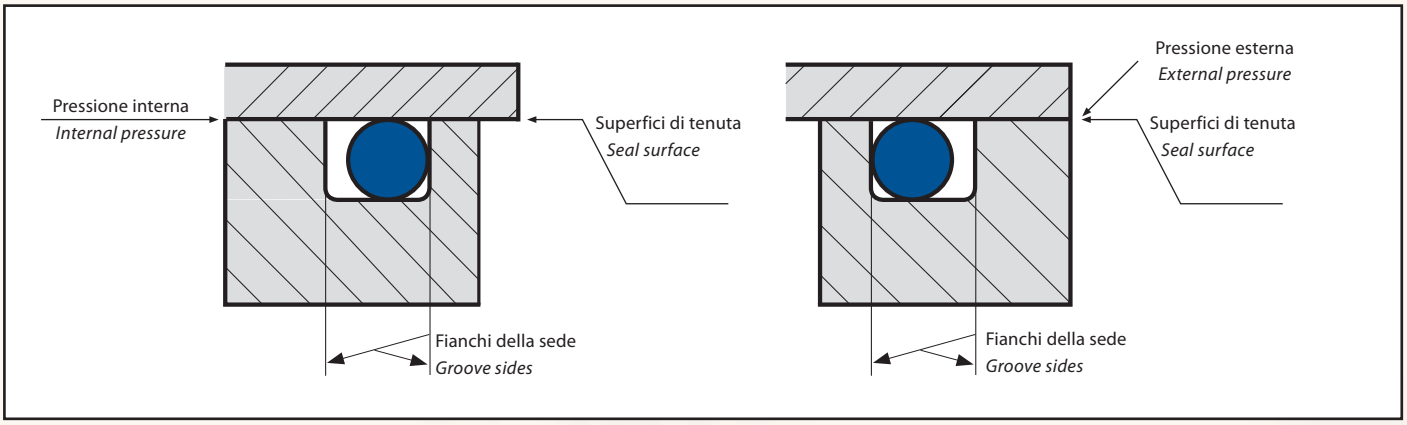

Superfici di tenuta: Ra 0,8 µm
Seal surface

Fianchi della sede: Ra 3,2 µm
Groove sides

Superfici di tenuta: Ra 0,8 µm
Seal surface

Fianchi della sede: Ra 3,2 µm
Groove sides

Tenute dinamiche radiali

Impiego dinamico
Dynamic application

Radial dynamic sealing

Impiego dinamico, movimenti alternativi
Dynamic application, reciprocating movements

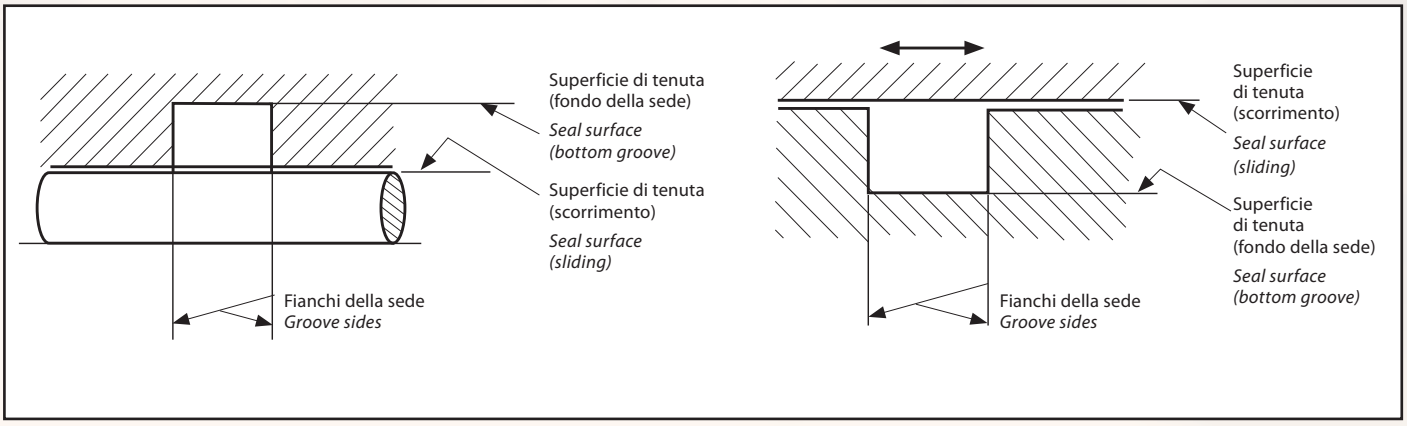

Superfici di tenuta (strisciamento): Ra 0,2 ÷ 0,4 µm
Seal surface (sliding):

Fondo della sede: Ra 3,2 µm
Bottom groove:

Fianchi della sede: Ra 3,2 µm
Groove sides:

Superfici di tenuta (strisciamento): Ra 0,4 µm
Seal surface (sliding):

Fondo della sede: Ra 0,8 µm
Bottom groove:

Fianchi della sede: Ra 0,8 µm
Groove sides:

Tolleranze di produzione guarnizioni OR *O-Rings production tolerances*

Diametro interno OR d (mm) *OR Internal diameter d (mm)*		Tolleranza *Tolerances*
oltre *over*	fino a *up to*	(mm)
—	10	± 0,15
10	18	± 0,20
18	39	± 0,35
39	66	± 0,50
66	80	± 0,65
80	120	± 0,90
120	180	± 1,25
180	250	± 1,60
250	315	± 2,00
315	400	± 2,50
400	500	± 3,20
500	630	± 4,00
630	800	± 6,30

Diametro sezione OR d (mm) *OR cross section d (mm)*		Tolleranza *Tolerances*
oltre *over*	fino a *up to*	(mm)
1,50	2,62	± 0,08
2,62	4,00	± 0,10
4,00	5,70	± 0,12
5,70	8,40	± 0,15

Gli anelli antiestrusione prodotti in PTFE vengono usati unitamente agli anelli O-RINGS per tenute statiche e dinamiche, per impedire l'estrusione dell'O-RING tra gli elementi metallici.

The back-up rings in PTFE are used with the O-RINGS for static and dynamic applications in order to prevent the O-RING extrusion between the metal parts.

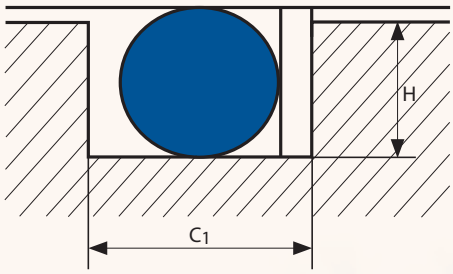

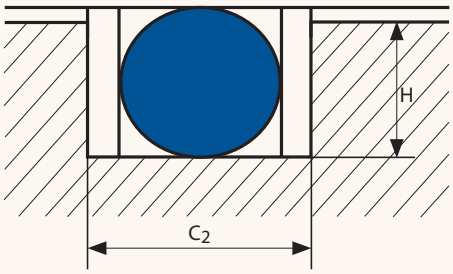

Diametro corda OR *OR cross section*	Profondità della sede *Groove depth* *H*	Larghezza della sede BK *BK Groove width*	
		C_1	C_2
1,78	1,50	4,00	5,50
2,62	2,20	5,00	6,50
3,53	3,05	6,00	7,50
5,34	4,70	8,80	10,60
6,99	6,20	12,00	14,50

A spirale tagliata
Spiral type

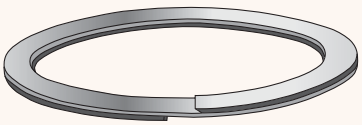

A rondella chiusa
Close washer type

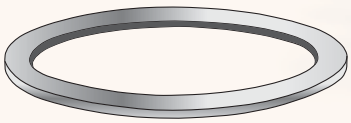

A rondella tagliata
Cutted washer type

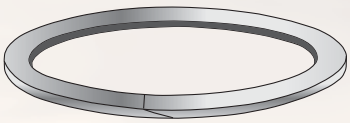

Corda 1,78 — *Section 1,78*

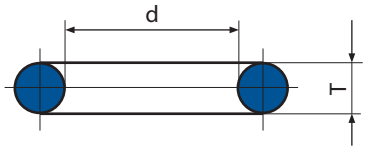

O-RING rif. AS 568 A/B.S. 1806

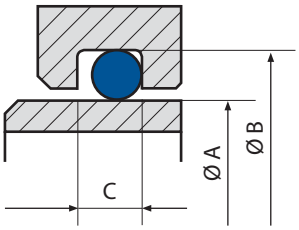

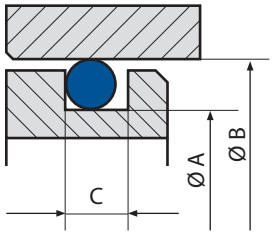

Rif. n°	AS/BS	d	T	Tenuta stelo *Rod application*				Tenuta pistone *Piston application*			
				f 7 A	H 9 B Hydro.	H 9 B Pneum.	± 0,2 C	H 8 B	h 9 A Hydro.	h 9 A Pneum.	± 0,2 C
OR 2007	004	**1,78**	**1,78**	2	5,0	Su richiesta *On request*	2,5	5	1,8	Su richiesta *On request*	2,5
OR 2010	005	**2,57**	**1,78**	2,5	5,6		2,5	5,8	2,6		2,5
OR 2012	006	**2,90**	**1,78**	3	6,0		2,5	6	3,1		2,5
OR 2015	007	**3,69**	**1,78**	4	7,0		2,5	7	4,1		2,5
OR 2018	008	**4,48**	**1,78**	5	7,8		2,5	8	5,1		2,5
OR 2021	009	**5,28**	**1,78**	5,5	8,5		2,5	8	5,1		2,5
OR 2025	010	**6,07**	**1,78**	6	9,0		2,5	9	6,1		2,5
OR 106	-	**6,75**	**1,78**	7	10,0		2,5	10	7,1		2,5
OR 2031	011	**7,66**	**1,78**	8	10,9		2,5	11	8,1		2,5
OR 108	-	**8,73**	**1,78**	9	11,0		2,5	12	9,1		2,5
OR 2037	012	**9,25**	**1,78**	10	12,9		2,5	13	10,1		2,5
OR 2043	013	**10,82**	**1,78**								
OR 114	-	**11,11**	**1,78**								
OR 2050	014	**12,42**	**1,78**								
OR 2056	015	**14,00**	**1,78**								
OR 2062	016	**15,60**	**1,78**								
OR 2068	017	**17,17**	**1,78**								
OR 2075	018	**18,77**	**1,78**								
OR 2081	019	**20,35**	**1,78**								
OR 2087	020	**21,95**	**1,78**								
OR 2093	021	**23,52**	**1,78**								
OR 2100	022	**25,12**	**1,78**								
OR 2106	023	**26,70**	**1,78**								
OR 2112	024	**28,30**	**1,78**								
OR 2118	025	**29,87**	**1,78**	**Sconsigliate per tenute dinamiche** *Not suitable for dynamic applications*							
OR 2125	026	**31,47**	**1,78**								
OR 2131	027	**33,05**	**1,78**								
OR 2137	028	**34,65**	**1,78**								
OR 2150	029	**37,82**	**1,78**								
OR 2162	030	**41,00**	**1,78**								
OR 2175	031	**44,17**	**1,78**								
OR 2187	032	**47,35**	**1,78**								
OR 2200	033	**50,52**	**1,78**								
OR 2212	034	**53,70**	**1,78**								
OR 2224	035	**56,87**	**1,78**								
OR 2237	036	**60,05**	**1,78**								
OR 2250	037	**63,22**	**1,78**								
OR 2262	038	**66,40**	**1,78**								
OR 2275	039	**69,57**	**1,78**								
OR 2287	040	**72,75**	**1,78**								

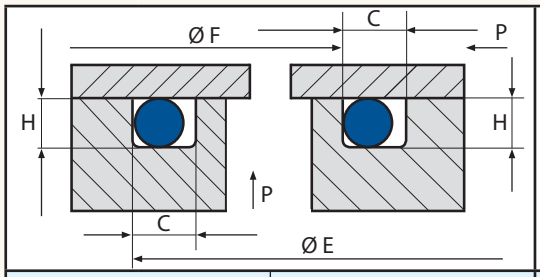

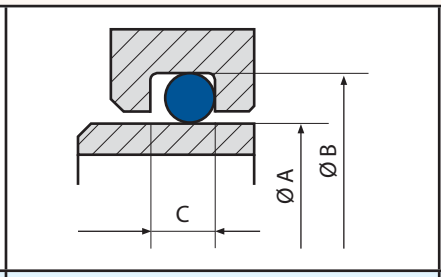

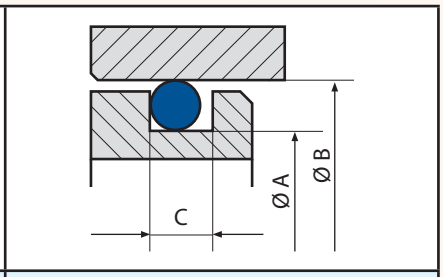

Pressione interna	Internal pression	Pressione esterna	External pression	Tenuta stelo	Rod application		Tenuta pistone	Piston application	
H 11	± 0,2	+ 0,1 / 0	h 11	f 7	H 11	± 0,2	H 8	h 11	± 0,2
E	C	H	F	A	B	C	B	A	C
5	2,5	1,3	2	2	5,0	2,5	5	1,8	2,5
5,8	2,5	1,3	2,5	2,5	5,6	2,5	5,8	2,6	2,5
6	2,5	1,3	3	3	6,0	2,5	6	3,4	2,5
7	2,5	1,3	4	4	6,8	2,5	7	4,4	2,5
8	2,5	1,3	5	5	7,6	2,5	8	5,4	2,5
8	2,5	1,3	5,5	5,5	8,3	2,5	8	5,4	2,5
9	2,5	1,3	6	6	8,8	2,5	9	6,4	2,5
10	2,5	1,3	7	7	9,8	2,5	10	7,4	2,5
11	2,5	1,3	8	8	10,6	2,5	11	8,4	2,5
12	2,5	1,3	9	9	11,6	2,5	12	9,4	2,5
13	2,5	1,3	10	10	12,6	2,5	13	10,4	2,5
14	2,5	1,3	11	11	13,6	2,5	14	11,4	2,5
15	2,5	1,3	11	11	13,6	2,5	15	12,4	2,5
16	2,5	1,3	13	13	15,6	2,5	16	13,4	2,5
18	2,5	1,3	14	14	16,6	2,5	18	15,4	2,5
19	2,5	1,3	16	16	18,6	2,5	19	16,4	2,5
21	2,5	1,3	17	17	19,6	2,5	21	18,4	2,5
22	2,5	1,3	19	19	21,6	2,5	22	19,4	2,5
24	2,5	1,3	21	21	23,6	2,5	24	21,4	2,5
26	2,5	1,3	22	22	24,6	2,5	26	23,4	2,5
27	2,5	1,3	24	24	26,6	2,5	27	24,4	2,5
28	2,5	1,3	25	25	27,6	2,5	28	25,4	2,5
30	2,5	1,3	27	27	29,6	2,5	30	27,4	2,5
32	2,5	1,3	28	28	30,6	2,5	32	29,4	2,5
33	2,5	1,3	30	30	32,6	2,5	33	30,4	2,5
35	2,5	1,3	32	32	34,6	2,5	35	32,4	2,5
36	2,5	1,3	33	33	35,6	2,5	36	33,4	2,5
38	2,5	1,3	35	35	37,6	2,5	38	35,4	2,5
41	2,5	1,3	38	38	40,6	2,5	41	38,4	2,5
45	2,5	1,3	41	41	43,6	2,5	45	42,4	2,5
48	2,5	1,3	44	44	46,6	2,5	48	45,4	2,5
51	2,5	1,3	48	48	50,6	2,5	51	48,4	2,5
54	2,5	1,3	51	51	53,6	2,5	54	51,4	2,5
57	2,5	1,3	54	54	56,6	2,5	57	54,4	2,5
60	2,5	1,3	57	57	59,6	2,5	60	57,4	2,5
64	2,5	1,3	60	60	62,6	2,5	64	61,4	2,5
67	2,5	1,3	64	64	66,6	2,5	67	64,4	2,5
70	2,5	1,3	67	67	69,6	2,5	70	67,4	2,5
73	2,5	1,3	70	70	72,6	2,5	73	70,4	2,5
76	2,5	1,3	73	73	75,6	2,5	76	73,4	2,5

Corda 1,78 — *Section 1,78*

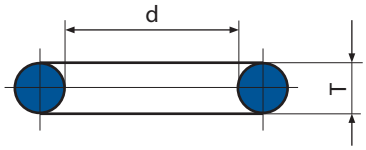

O-RING rif. AS 568 A/B.S. 1806

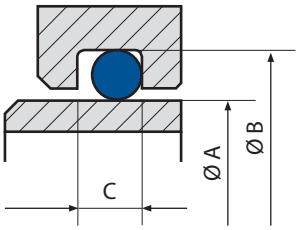

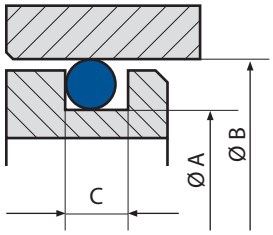

Rif. n°	AS/BS	d	T	Tenuta stelo *Rod application*				Tenuta pistone *Piston application*			
				f 7 A	H 9 B Hydro.	H 9 B Pneum.	± 0,2 C	H 8 B	h 9 A Hydro.	h 9 A Pneum.	± 0,2 C
OR 2300	041	**75,92**	**1,78**								
OR 2325	042	**82,27**	**1,78**								
OR 2350	043	**88,62**	**1,78**								
OR 2375	044	**94,97**	**1,78**								
OR 2400	045	**101,32**	**1,78**	**Sconsigliate per tenute dinamiche** *Not suitable for dynamic applications*							
OR 2425	046	**107,67**	**1,78**								
OR 2450	047	**114,02**	**1,78**								
OR 2475	048	**120,37**	**1,78**								
OR 2500	049	**126,72**	**1,78**								
OR 2525	050	**133,07**	**1,78**								

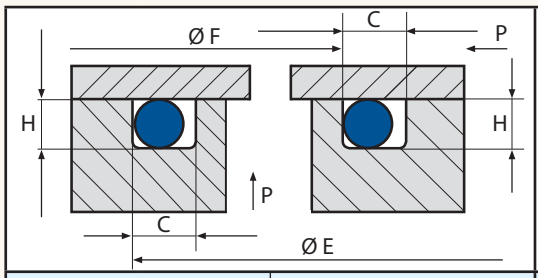

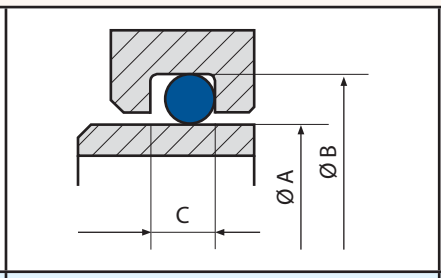

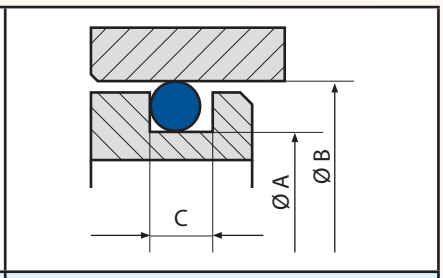

Pressione interna	Internal pression	Pressione esterna	External pression	Tenuta stelo	Rod application		Tenuta pistone	Piston application	
H 11 E	± 0,2 C	+ 0,1 0 H	h 11 F	f 7 A	H 11 B	± 0,2 C	H 8 B	h 11 A	± 0,2 C
79	2,5	1,3	76	76	78,6	2,5	79	76,4	2,5
85	2,5	1,3	82	82	84,6	2,5	85	82,4	2,5
92	2,5	1,3	89	89	91,6	2,5	92	89,4	2,5
98	2,5	1,3	95	95	97,6	2,5	98	95,4	2,5
105	2,5	1,3	102	102	104,6	2,5	105	102,4	2,5
111	2,5	1,3	108	108	110,6	2,5	111	108,4	2,5
117	2,5	1,3	114	114	116,6	2,5	117	114,4	2,5
124	2,5	1,3	121	121	123,6	2,5	124	121,4	2,5
130	2,5	1,3	127	127	129,6	2,5	130	127,4	2,5
136	2,5	1,3	133	133	135,6	2,5	136	133,4	2,5

Corda 2,62 — *Section 2,62*

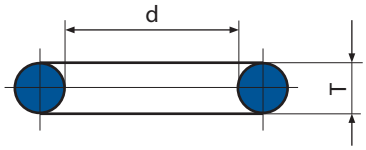

O-RING rif. AS 568 A/B.S. 1806

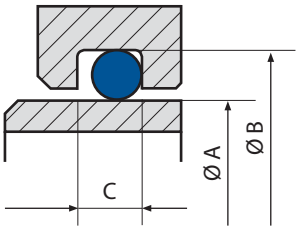

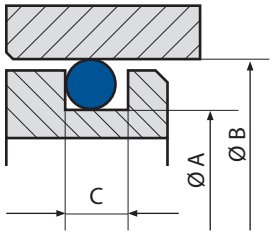

Rif. n°	AS/BS	d	T	Tenuta stelo *Rod application*				Tenuta pistone *Piston application*			
				f 7 A	H 9 B Hydro.	H 9 B Pneum.	± 0,2 C	H 8 B	h 9 A Hydro.	h 9 A Pneum.	± 0,2 C
OR 3021	107	**5,23**	**2,62**	5	9,7	Su richiesta *On request*	3,5	10	5,6	Su richiesta *On request*	3,5
OR 3024	108	**6,02**	**2,62**	6	10,7		3,5	11	5,6		3,5
OR 3030	109	**7,59**	**2,62**	8	12,7		3,5	13	8,6		3,5
OR 109	-	**9,13**	**2,62**	9	13,7		3,5	14	9,6		3,5
OR 3037	110	**9,19**	**2,62**	9	13,7		3,3	14	9,6		3,5
OR 112	-	**9,92**	**2,62**	10	14,7		3,5	15	10,6		3,5
OR 3043	111	**10,78**	**2,62**	11	15,7		3,5	16	11,6		3,5
OR 115	-	**11,91**	**2,62**	12	16,7		3,5	17	12,6		3,5
OR 3050	112	**12,37**	**2,62**	12,5	17,2		3,5	18	13,6		3,5
OR 117	-	**13,1**	**2,62**	13	17,7		3,5	18	13,6		3,5
OR 3056	113	**13,95**	**2,62**	14	18,7		3,5	19	14,6		3,5
OR 119	-	**15,08**	**2,62**	15	19,7		3,5	20	15,6		3,5
OR 3062	114	**15,54**	**2,62**	15,5	20,1		3,5	21	16,6		3,5
OR 121	-	**15,88**	**2,62**	16	20,4		3,5	21	16,6		3,5
OR 3068	115	**17,13**	**2,62**	17	21,4		3,5	22	17,6		3,5
OR 123	-	**17,86**	**2,62**	18	22,4		3,5	23	18,6		3,5
OR 3075	116	**18,72**	**2,62**	19	23,4		3,5	24	19,6		3,5
OR 3081	117	**20,24**	**2,62**								
OR 128	-	**20,63**	**2,62**								
OR 3087	118	**21,89**	**2,62**								
OR 130	-	**22,22**	**2,62**								
OR 3093	119	**23,47**	**2,62**								
OR 132	-	**23,81**	**2,62**								
OR 3100	120	**25,07**	**2,62**								
OR 3106	121	**26,65**	**2,62**	**Sconsigliate per tenute dinamiche** *Not suitable for dynamic applications*							
OR 3112	122	**28,25**	**2,62**								
OR 3118	123	**29,82**	**2,62**								
OR 3125	124	**31,42**	**2,62**								
OR 3131	125	**32,99**	**2,62**								
OR 3137	126	**34,6**	**2,62**								
OR 3143	127	**36,14**	**2,62**								
OR 3150	128	**37,77**	**2,62**								
OR 3156	129	**39,34**	**2,62**								
OR 3162	130	**40,95**	**2,62**								
OR 3168	131	**42,52**	**2,62**								
OR 3175	132	**44,12**	**2,62**								
OR 3181	133	**45,69**	**2,62**								
OR 3187	134	**47,3**	**2,62**								
OR 3193	135	**48,89**	**2,62**								
OR 3200	136	**50,47**	**2,62**								

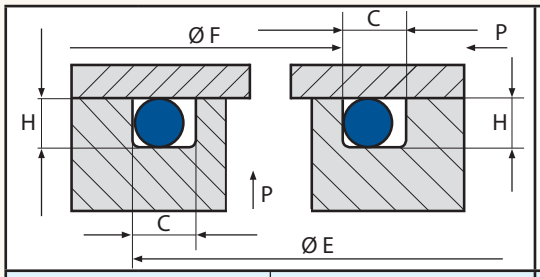

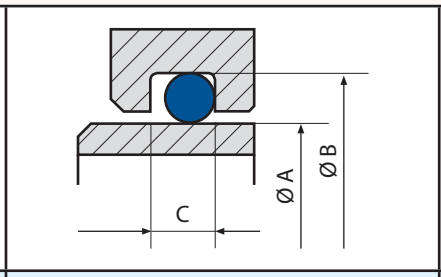

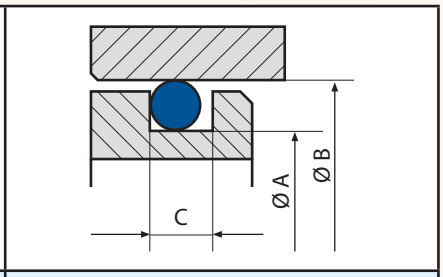

Pressione interna	Internal pression	Pressione esterna	External pression	Tenuta stelo	Rod application		Tenuta pistone	Piston application	
H 11 E	± 0,2 C	+ 0,1 0 H	h 11 F	f 7 A	H 11 B	± 0,2 C	H 8 B	h 11 A	± 0,2 C
10	3,5	2,05	5	5	9,5	3,5	10	5,9	3,5
11	3,5	2,05	5	5	10,5	3,5	11	6,9	3,5
13	3,5	2,05	8	8	12,5	3,5	13	8,9	3,5
14	3,5	2,05	9	9	13,5	3,5	14	9,9	3,5
14	3,5	2,05	9	9	13,5	3,5	14	9,9	3,5
15	3,5	2,05	10	10	14,5	3,5	15	10,9	3,5
16	3,5	2,05	11	11	15,5	3,5	16	11,9	3,5
17	3,5	2,05	12	12	16,5	3,5	17	12,9	3,5
18	3,5	2,05	12,5	12,5	16,7	3,5	18	13,9	3,5
18	3,5	2,05	13	13	17,4	3,5	18	13,9	3,5
19	3,5	2,05	14	14	18,4	3,5	19	14,9	3,5
20	3,5	20,5	15	15	19,4	3,5	20	15,9	3,5
21	3,5	2,05	15,5	15,5	19,8	3,5	21	16,9	3,5
21	3,5	2,05	16	16	20,1	3,5	21	16,9	3,5
22	3,5	2,05	17	17	21,1	3,5	22	17,9	3,5
23	3,5	2,05	18	18	22,1	3,5	23	18,9	3,5
24	3,5	2,05	19	19	23,1	3,5	24	19,9	3,5
25	3,5	2,05	20	20	24,1	3,5	25	20,9	3,5
26	3,5	2,05	21	21	25,1	3,5	26	21,9	3,5
27	3,5	2,05	22	22	26,1	3,5	27	22,9	3,5
27	3,5	2,05	23	23	27,1	3,5	27	22,9	3,5
29	3,5	2,05	24	24	28,1	3,5	29	24,9	3,5
29	3,5	2,05	24	24	28,1	3,5	29	24,9	3,5
30	3,5	2,05	25	25	29,1	3,5	30	25,9	3,5
32	3,5	2,05	27	27	31,1	3,5	32	27,9	3,5
33	3,5	2,05	28	28	32,1	3,5	33	28,9	3,5
35	3,5	2,05	30	30	34,1	3,5	35	30,9	3,5
37	3,5	2,05	32	32	36,1	3,5	37	32,9	3,5
38	3,5	2,05	33	33	37,1	3,5	38	33,9	3,5
40	3,5	2,05	35	35	39,1	3,5	40	35,9	3,5
41	3,5	2,05	36	36	40,1	3,5	41	36,9	3,5
43	3,5	2,05	38	38	42,1	3,5	43	38,9	3,5
45	3,5	2,05	40	40	44,1	3,5	45	40,9	3,5
46	3,5	2,05	41	41	45,1	3,5	46	41,9	3,5
48	3,5	2,05	43	43	47,1	3,5	48	43,9	3,5
49	3,5	2,05	44	44	48,1	3,5	49	44,9	3,5
51	3,5	2,05	46	46	50,1	3,5	51	46,9	3,5
53	3,5	2,05	48	48	52,1	3,5	53	48,9	3,5
54	3,5	2,05	49	49	53,1	3,5	54	49,9	3,5
56	3,5	2,05	51	51	55,1	3,5	56	51,9	3,5

Corda 2,62 — *Section 2,62*

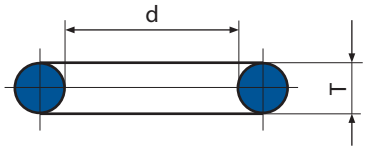

O-RING rif. AS 568 A/B.S. 1806

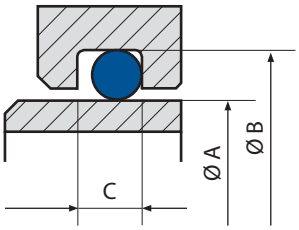

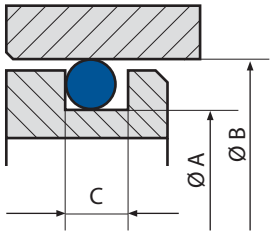

Rif. n°	AS/BS	d	T	Tenuta stelo *Rod application*				Tenuta pistone *Piston application*			
				f 7 A	H 9 B Hydro.	H 9 B Pneum.	± 0,2 C	H 8 B	h 9 A Hydro.	h 9 A Pneum.	± 0,2 C
OR 3206	137	**52,07**	**2,62**								
OR 3212	138	**53,65**	**2,62**								
OR 3218	139	**55,25**	**2,62**								
OR 3225	140	**56,82**	**2,62**								
OR 3231	141	**58,42**	**2,62**								
OR 3237	142	**60**	**2,62**								
OR 3243	143	**61,6**	**2,62**								
OR 3250	144	**63,17**	**2,62**								
OR 3256	145	**64,77**	**2,62**								
OR 3262	146	**66,35**	**2,62**								
OR 3268	147	**67,95**	**2,62**								
OR 3275	148	**69,52**	**2,62**								
OR 3281	149	**71,12**	**2,62**								
OR 3287	150	**72,69**	**2,62**								
OR 3300	151	**75,87**	**2,62**								
OR 3325	152	**82,22**	**2,62**								
OR 3350	153	**88,57**	**2,62**	**Sconsigliate per tenute dinamiche** *Not suitable for dynamic applications*							
OR 3375	154	**94,92**	**2,62**								
OR 3400	155	**101,27**	**2,62**								
OR 3425	156	**107,62**	**2,62**								
OR 3450	157	**113,97**	**2,62**								
OR 3475	158	**120,32**	**2,62**								
OR 3500	159	**126,67**	**2,62**								
OR 3525	160	**133,02**	**2,62**								
OR 3550	161	**139,37**	**2,62**								
OR 3575	162	**145,72**	**2,62**								
OR 3600	163	**152,07**	**2,62**								
OR 3625	164	**158,42**	**2,62**								
OR 3650	165	**164,77**	**2,62**								
OR 3675	166	**171,12**	**2,62**								
OR 3700	167	**177,47**	**2,62**								
OR 3725	168	**183,62**	**2,62**								
OR 3750	169	**190,17**	**2,62**								
OR 3775	170	**196,52**	**2,62**								
OR 3800	171	**202,87**	**2,62**								
OR 3825	172	**209,22**	**2,62**								
OR 3850	173	**215,57**	**2,62**								
OR 3875	174	**221,92**	**2,62**								
OR 3900	175	**228,27**	**2,62**								
OR 3925	176	**234,62**	**2,62**								
OR 3950	177	**240,97**	**2,62**								
OR 3975	178	**247,32**	**2,62**								

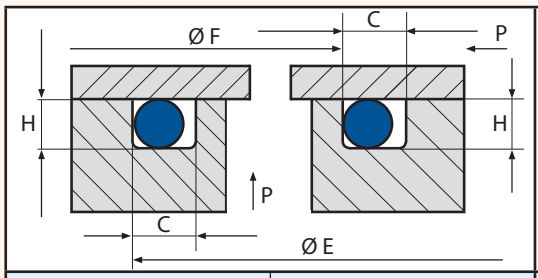

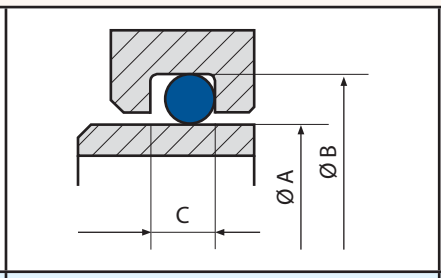

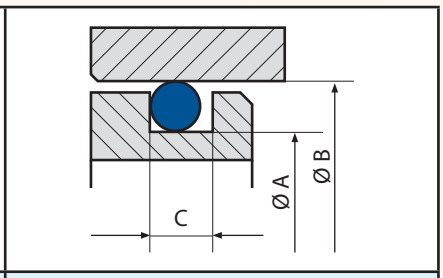

Pressione interna	Internal pression	Pressione esterna	External pression	Tenuta stelo	Rod application		Tenuta pistone	Piston application	
H 11 E	± 0,2 C	+ 0,1 0 H	h 11 F	f 7 A	H 11 B	± 0,2 C	H 8 B	h 11 A	± 0,2 C
57	3,5	2,05	52	52	56,1	3,5	57	52,9	3,5
59	3,5	2,05	54	54	58,1	3,5	59	54,9	3,5
61	3,5	2,05	55	55	59,1	3,5	61	56,9	3,5
62	3,5	2,05	57	57	61,1	3,5	62	57,9	3,5
64	3,5	2,05	59	59	63,1	3,5	64	59,9	3,5
65	3,5	2,05	60	60	64,1	3,5	65	60,9	3,5
67	3,5	2,05	62	62	66,1	3,5	67	62,9	3,5
68	3,5	2,05	63	63	67,1	3,5	68	63,9	3,5
70	3,5	2,05	65	65	69,1	3,5	70	65,9	3,5
72	3,5	2,05	67	67	72,1	3,5	72	67,9	3,5
73	3,5	2,05	68	68	72,1	3,5	73	68,9	3,5
75	3,5	2,05	70	70	74,1	3,5	75	70,9	3,5
76	3,5	2,05	71	71	75,1	3,5	76	71,9	3,5
78	3,5	2,05	73	73	77,1	3,5	78	73,9	3,5
81	3,5	2,05	76	76	80,1	3,5	81	76,9	3,5
87	3,5	2,05	83	83	87,1	3,5	87	82,9	3,5
94	3,5	2,05	89	89	93,1	3,5	94	89,9	3,5
100	3,5	2,05	95	95	99,1	3,5	100	95,9	3,5
106	3,5	2,05	101	101	105,1	3,5	106	101,9	3,5
113	3,5	2,05	108	108	112,1	3,5	113	108,9	3,5
119	3,5	2,05	114	114	118,1	3,5	119	114,9	3,5
125	3,5	2,05	121	121	125,1	3,5	125	120,9	3,5
132	3,5	2,05	127	127	131,1	3,5	132	127,9	3,5
138	3,5	2,05	133	133	137,1	3,5	138	133,9	3,5
144	3,5	2,05	140	140	144,1	3,5	144	139,9	3,5
151	3,5	2,05	146	146	150,1	3,5	151	146,9	3,5
157	3,5	2,05	152	152	156,1	3,5	157	152,9	3,5
164	3,5	2,05	159	159	163,1	3,5	164	159,9	3,5
170	3,5	2,05	165	165	169,1	3,5	170	165,9	3,5
176	3,5	2,05	171	171	175,1	3,5	176	171,9	3,5
183	3,5	2,05	178	178	182,1	3,5	183	178,9	3,5
189	3,5	2,05	184	184	188,1	3,5	189	184,9	3,5
195	3,5	2,05	190	190	194,1	3,5	195	190,9	3,5
202	3,5	2,05	197	197	201,1	3,5	202	197,9	3,5
208	3,5	2,05	203	203	207,1	3,5	208	203,9	3,5
214	3,5	2,05	209	209	213,1	3,5	214	209,9	3,5
221	3,5	2,05	216	216	220,1	3,5	221	216,9	3,5
227	3,5	2,05	222	222	226,1	3,5	227	222,9	3,5
234	3,5	2,05	228	228	232,1	3,5	234	229,9	3,5
239	3,5	2,05	235	235	239,1	3,5	239	234,9	3,5
246	3,5	2,05	241	241	245,1	3,5	246	241,9	3,5
253	3,5	2,05	247	247	251,1	3,5	253	248,9	3,5

Corda 3,53 — *Section 3,53*

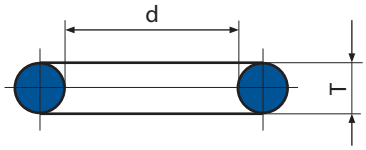

O-RING rif. AS 568 A/B.S. 1806

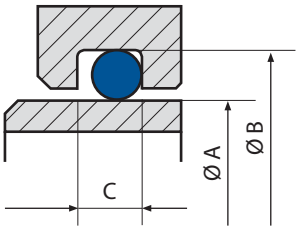

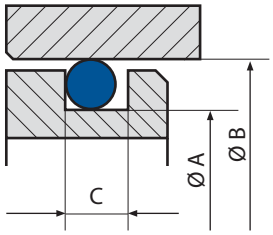

Rif. n°	AS/BS	d	T	Tenuta stelo *Rod application*				Tenuta pistone *Piston application*			
				f 7 A	H 9 B Hydro.	H 9 B Pneum.	± 0,2 C	H 8 B	h 9 A Hydro.	h 9 A Pneum.	± 0,2 C
OR 4028	203	**7,51**	**3,53**	8	14,1	Su richiesta *On request*	4,5	14	7,9	Su richiesta *On request*	4,5
OR 4036	204	**9,12**	**3,53**	9	15,1		4,5	16	9,9		4,5
OR 4050	206	**12,29**	**3,53**	12	18,1		4,5	19	12,9		4,5
OR 4055	207	**13,87**	**3,53**	14	20,1		4,5	21	14,9		4,5
OR 4061	208	**15,47**	**3,53**	15	21,1		4,5	23	16,9		4,5
OR 4067	209	**17,04**	**3,53**	17	23,1		4,5	24	17,9		4,5
OR 4075	210	**18,64**	**3,53**	19	25,1		4,5	26	19,9		4,5
OR 4081	211	**20,22**	**3,53**	20	26,1		4,5	28	21,9		4,5
OR 4087	212	**21,82**	**3,53**	22	28,1		4,5	29	22,9		4,5
OR 4093	213	**23,4**	**3,53**	23	29,1		4,5	30	23,9		4,5
OR 4100	214	**24,99**	**3,53**	25	31,1		4,5	32	25,9		4,5
OR 134	-	**25,8**	**3,53**	26	32,1		4,5	33	26,9		4,5
OR 4106	215	**26,58**	**3,53**	27	33,1		4,5	34	27,9		4,5
OR 4112	216	**28,17**	**3,53**	28	34,1		4,5	35	28,9		4,5
OR 4118	217	**29,75**	**3,53**	30	36,1		4,5	37	30,9		4,5
OR 4125	218	**31,34**	**3,53**	31	37,1		4,5	38	31,9		4,5
OR 4131	219	**32,93**	**3,53**	33	39,1		4,5	40	33,9		4,5
OR 4137	220	**34,52**	**3,53**	35	41,1		4,5	42	35,9		4,5
OR 4143	221	**36,1**	**3,53**	36	42,1		4,5	43	36,9		4,5
OR 4150	222	**37,69**	**3,53**	38	44,1		4,5	45	38,9		4,5
OR 144	-	**36,69**	**3,53**								
OR 4162	223	**40,86**	**3,53**								
OR 146	-	**41,28**	**3,53**								
OR 147	-	**42,86**	**3,53**								
OR 4175	224	**44,04**	**3,53**								
OR 149	-	**44,45**	**3,53**								
OR 150	-	**46,04**	**3,53**								
OR 4187	225	**47,22**	**3,53**								
OR 152	-	**47,63**	**3,53**	**Sconsigliate per tenute dinamiche** *Not suitable for dynamic applications*							
OR 153	-	**49,21**	**3,53**								
OR 4200	226	**50,39**	**3,53**								
OR 155	-	**50,8**	**3,53**								
OR 156	-	**52,39**	**3,53**								
OR 4212	227	**53,57**	**3,53**								
OR 158	-	**53,98**	**3,53**								
OR 159	-	**55,56**	**3,53**								
OR 4225	228	**56,74**	**3,53**								
OR 161	-	**57,15**	**3,53**								
OR 162	-	**58,74**	**3,53**								
OR 4237	229	**59,92**	**3,53**								

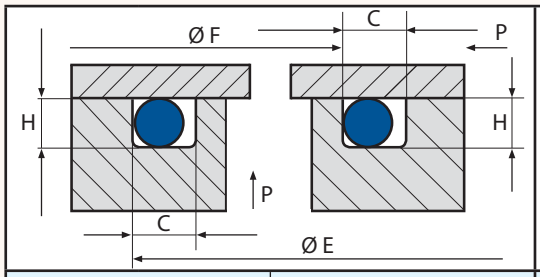

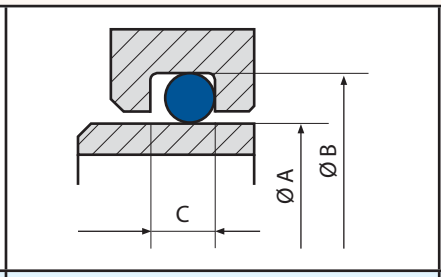

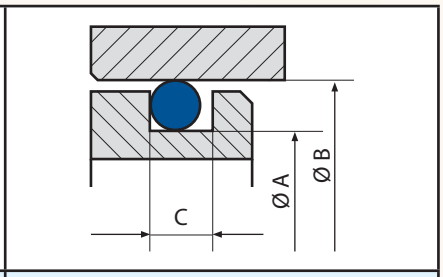

Pressione interna	Internal pression	Pressione esterna	External pression	Tenuta stelo	Rod application		Tenuta pistone	Piston application	
H 11 E	± 0,2 C	+ 0,1 0 H	h 11 F	f 7 A	H 11 B	± 0,2 C	H 8 B	h 11 A	± 0,2 C
14	4,5	2,9	8	8	13,8	4,5	14	8,2	4,5
16	4,5	2,9	9	9	14,8	4,5	16	10,2	4,5
19	4,5	2,9	12	12	17,8	4,5	19	13,2	4,5
21	4,5	2,9	14	14	19,8	4,5	21	15,2	4,5
23	4,5	2,9	15	15	20,8	4,5	23	17,2	4,5
24	4,5	2,9	17	17	22,8	4,5	24	18,2	4,5
26	4,5	2,9	19	19	24,8	4,5	26	20,2	4,5
28	4,5	2,9	20	20	25,8	4,5	28	22,2	4,5
29	4,5	2,9	22	22	27,8	4,5	29	23,2	4,5
30	4,5	2,9	23	23	28,8	4,5	30	24,2	4,5
32	4,5	2,9	25	25	30,8	4,5	32	26,2	4,5
33	4,5	2,9	26	26	31,8	4,5	33	27,2	4,5
34	4,5	2,9	27	27	32,8	4,5	34	28,2	4,5
35	4,5	2,9	28	28	33,8	4,5	35	29,2	4,5
37	4,5	2,9	30	30	35,8	4,5	37	31,2	4,5
38	4,5	2,9	31	31	36,8	4,5	38	32,2	4,5
40	4,5	2,9	33	33	38,8	4,5	40	34,2	4,5
42	4,5	2,9	35	35	40,8	4,5	42	36,2	4,5
43	4,5	2,9	36	36	41,8	4,5	43	37,2	4,5
45	4,5	2,9	38	38	43,8	4,5	45	39,2	4,5
46	4,5	2,9	40	40	45,8	4,5	46	40,2	4,5
48	4,5	2,9	42	42	47,8	4,5	48	42,2	4,5
48	4,5	2,9	42	42	47,8	4,5	48	42,2	4,5
50	4,5	2,9	43	43	48,8	4,5	50	44,2	4,5
51	4,5	2,9	45	45	50,8	4,5	51	45,2	4,5
51	4,5	2,9	45	45	50,8	4,5	51	45,2	4,5
53	4,5	2,9	46	46	51,8	4,5	53	47,2	4,5
54	4,5	2,9	48	48	53,8	4,5	54	48,2	4,5
54	4,5	2,9	48	48	53,8	4,5	54	48,2	4,5
56	4,5	2,9	49	49	54,8	4,5	56	50,2	4,5
58	4,5	2,9	51	51	56,8	4,5	58	52,2	4,5
58	4,5	2,9	51	51	56,8	4,5	58	52,2	4,5
60	4,5	2,9	52	52	57,8	4,5	60	54,2	4,5
61	4,5	2,9	54	54	59,8	4,5	61	55,2	4,5
61	4,5	2,9	54	54	59,8	4,5	61	55,2	4,5
62	4,5	2,9	56	56	61,8	4,5	62	56,2	4,5
64	4,5	2,9	58	58	63,8	4,5	64	58,2	4,5
64	4,5	2,9	58	58	63,8	4,5	64	58,2	4,5
65	4,5	2,9	59	59	64,8	4,5	65	59,2	4,5
67	4,5	2,9	60	60	65,8	4,5	67	61,2	4,5

Corda 3,53 — *Section 3,53*

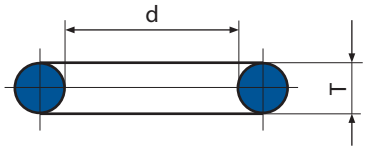

O-RING rif. AS 568 A/B.S. 1806

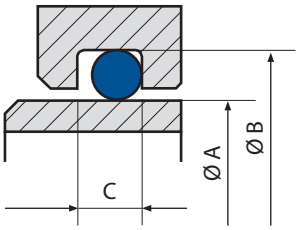

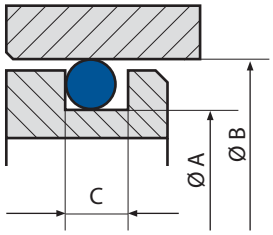

Rif. n°	AS/BS	d	T	Tenuta stelo *Rod application*				Tenuta pistone *Piston application*			
				f 7 A	H 9 B Hydro.	H 9 B Pneum.	± 0,2 C	H 8 B	h 9 A Hydro.	h 9 A Pneum.	± 0,2 C
OR 164	-	**60,33**	**3,53**	67,39							
OR 165	-	**61,91**	**3,53**	68,97							
OR 4250	230	**63,09**	**3,35**	70,15							
OR 167	-	**63,5**	**3,53**	70,56							
OR 168	-	**65,09**	**3,53**	72,15							
OR 4262	231	**66,27**	**3,53**	73,33							
OR 170	-	**66,68**	**3,53**	73,74							
OR 171	-	**68,26**	**3,53**	75,32							
OR 4275	232	**69,44**	**3,53**	76,5							
OR 173	-	**69,85**	**3,53**	76,91							
OR 174	-	**71,44**	**3,53**	78,5							
OR 4287	233	**72,62**	**3,53**	79,68							
OR 176	-	**73,03**	**3,53**	80,09							
OR 177	-	**74,61**	**3,53**	81,67							
OR 4300	234	**75,8**	**3,53**	82,86							
OR 4312	235	**78,97**	**3,53**	86,03							
OR 4325	236	**82,14**	**3,53**	89,2							
OR 4337	237	**85,32**	**3,53**	92,38							
OR 4350	238	**88,5**	**3,53**	95,56							
OR 4362	239	**91,67**	**3,53**	98,73							
OR 4375	240	**94,84**	**3,53**	101,9							
OR 4387	241	**98,02**	**3,53**	105,08							
OR 4400	242	**101,2**	**3,53**	108,26							
OR 4412	243	**104,4**	**3,53**	111,46							
OR 4425	244	**107,5**	**3,53**	114,56							
OR 4437	245	**110,7**	**3,53**	117,76							
OR 4450	246	**113,9**	**3,53**	120,96							
OR 4462	247	**117,1**	**3,53**	124,16							
OR 4475	248	**120,2**	**3,53**	127,26							
OR 4487	249	**123,4**	**3,53**	130,46							
OR 4500	250	**126,6**	**3,53**	133,66							
OR 4512	251	**129,8**	**3,53**	136,86							
OR 4525	252	**132,9**	**3,53**	139,96							
OR 4537	253	**136,1**	**3,53**	143,16							
OR 4550	254	**139,3**	**3,53**	146,36							
OR 4562	255	**142,5**	**3,53**	149,56							
OR 4575	256	**145,6**	**3,53**	152,66							
OR 4587	257	**148,8**	**3,53**	155,86							
OR 4600	258	**152**	**3,53**	159,06							
OR 4625	259	**158,3**	**3,53**	165,36							

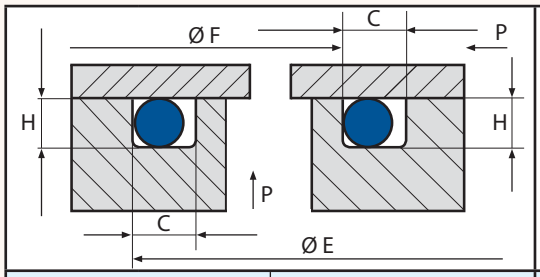

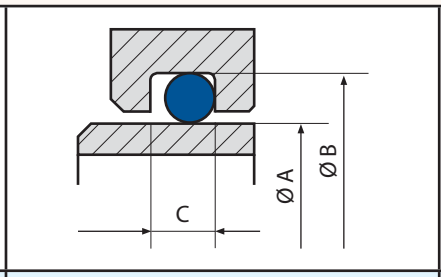

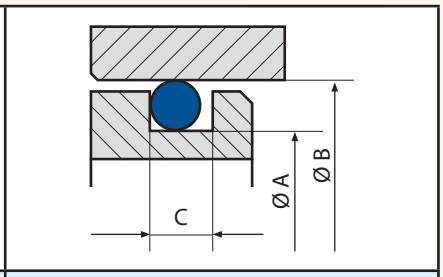

Pressione interna	Internal pression	Pressione esterna	External pression	Tenuta stelo	Rod application		Tenuta pistone	Piston application	
H 11 E	± 0,2 C	+ 0,1 0 H	h 11 F	f 7 A	H 11 B	± 0,2 C	H 8 B	h 11 A	± 0,2 C
67	4,5	2,9	61	61	66,8	4,5	67	61,2	4,5
69	4,5	2,9	62	62	67,8	4,5	69	63,2	4,5
70	4,5	2,9	64	64	69,8	4,5	70	64,2	4,5
70	4,5	2,9	64	64	69,8	4,5	70	64,2	4,5
72	4,5	2,9	65	65	70,8	4,5	72	66,2	4,5
73	4,5	2,9	67	67	72,8	4,5	73	67,2	4,5
73	4,5	2,9	67	67	72,8	4,5	73	67,2	4,5
75	4,5	2,9	68	68	73,8	4,5	75	69,2	4,5
77	4,5	2,9	70	70	75,8	4,5	77	71,2	4,5
77	4,5	2,9	70	70	75,8	4,5	77	72,2	4,5
78	4,5	2,9	72	72	77,8	4,5	78	72,2	4,5
80	4,5	2,9	73	73	78,8	4,5	80	74,2	4,5
80	4,5	2,9	74	74	79,8	4,5	80	74,2	4,5
81	4,5	2,9	75	75	80,8	4,5	81	75,2	4,5
83	4,5	2,9	76	76	81,8	4,5	83	77,2	4,5
86	4,5	2,9	79	79	84,8	4,5	86	80,2	4,5
89	4,5	2,9	82	82	87,8	4,5	89	83,2	4,5
92	4,5	2,9	85	85	90,8	4,5	92	86,2	4,5
95	4,5	2,9	89	89	94,8	4,5	95	89,2	4,5
99	4,5	2,9	92	92	97,8	4,5	99	93,2	4,5
102	4,5	2,9	95	95	100,8	4,5	102	96,2	4,5
105	4,5	2,9	98	98	103,8	4,5	105	99,2	4,5
108	4,5	2,9	101	101	106,8	4,5	108	102,2	4,5
111	4,5	2,9	105	105	110,8	4,5	111	105,2	4,5
114	4,5	2,9	108	108	113,8	4,5	114	108,2	4,5
118	4,5	2,9	111	111	116,8	4,5	118	112,2	4,5
121	4,5	2,9	114	114	119,8	4,5	121	115,2	4,5
124	4,5	2,9	117	117	122,8	4,5	124	118,2	4,5
127	4,5	2,9	120	120	125,8	4,5	127	121,2	4,5
130	4,5	2,9	123	123	128,8	4,5	130	124,2	4,5
133	4,5	2,9	127	127	132,8	4,5	133	127,2	4,5
136	4,5	2,9	130	130	135,8	4,5	136	130,2	4,5
140	4,5	2,9	133	133	138,8	4,5	140	134,2	4,5
143	4,5	2,9	136	136	141,8	4,5	143	137,2	4,5
146	4,5	2,9	140	140	145,8	4,5	146	140,2	4,5
149	4,5	2,9	143	143	148,8	4,5	149	143,2	4,5
152	4,5	2,9	146	146	151,8	4,5	152	146,2	4,5
155	4,5	2,9	149	149	154,8	4,5	155	149,2	4,5
159	4,5	2,9	152	152	157,8	4,5	159	153,2	4,5
165	4,5	2,9	159	159	164,8	4,5	165	159,2	4,5

Corda 3,53 — *Section 3,53*

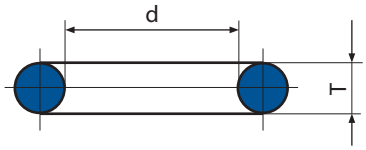

O-RING rif. AS 568 A/B.S. 1806

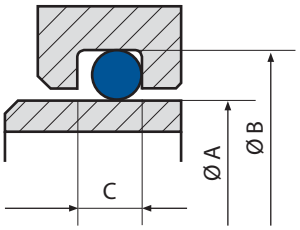

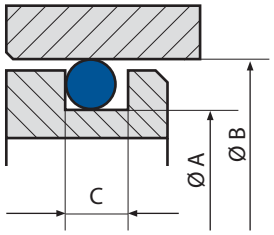

Rif. n°	AS/BS	d	T	Tenuta stelo *Rod application*				Tenuta pistone *Piston application*			
				f 7 A	H 9 B Hydro.	H 9 B Pneum.	± 0,2 C	H 8 B	h 9 A Hydro.	h 9 A Pneum.	± 0,2 C
OR 4650	260	**164,7**	**3,53**								
OR 4675	261	**171**	**3,53**								
OR 4700	262	**177,4**	**3,53**								
OR 4725	263	**183,7**	**3,53**								
OR 4750	264	**190,1**	**3,53**								
OR 4775	265	**196,4**	**3,53**								
OR 4800	266	**202,8**	**3,53**								
OR 4825	267	**209,1**	**3,53**								
OR 4850	268	**215,5**	**3,53**	**Sconsigliate per tenute dinamiche** *Not suitable for dynamic applications*							
OR 4875	269	**221,8**	**3,53**								
OR 4900	270	**228,2**	**3,53**								
OR 4925	271	**234,5**	**3,53**								
OR 4950	272	**240,9**	**3,53**								
OR 4975	273	**247,2**	**3,53**								
OR 41000	274	**253,6**	**3,53**								
OR 41050	275	**266,27**	**3,53**								
OR 41100	276	**278,99**	**3,53**								
OR 41150	277	**291,69**	**3,53**								
OR 41200	278	**304,39**	**3,53**								
OR 41300	279	**329,79**	**3,53**								
OR 41400	280	**355,19**	**3,53**								
OR 41500	281	**380,59**	**3,53**								
OR 41600	282	**405,26**	**3,53**								
OR 41700	283	**430,66**	**3,53**								
OR 41800	284	**456,06**	**3,53**								

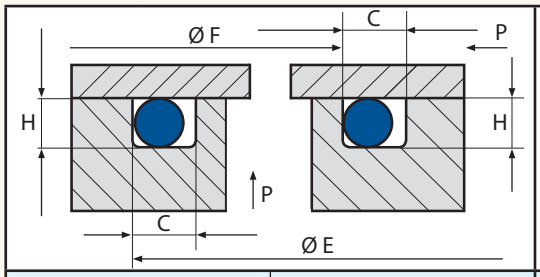

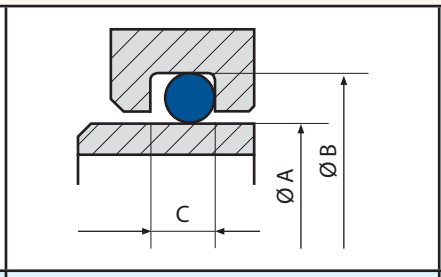

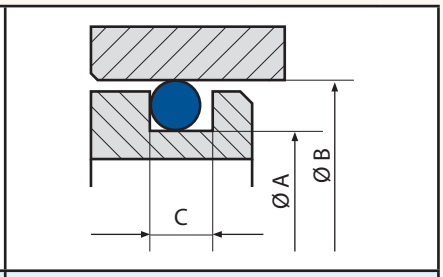

Pressione interna	Internal pression	Pressione esterna	External pression	Tenuta stelo	Rod application		Tenuta pistone	Piston application	
H 11 E	± 0,2 C	+ 0,1 0 H	h 11 F	f 7 A	H 11 B	± 0,2 C	H 8 B	h 11 A	± 0,2 C
172	4,5	2,9	165	165	170,8	4,5	172	166,2	166,2
178	4,5	2,9	172	172	177,8	4,5	178	172,2	172,2
184	4,5	2,9	178	178	183,8	4,5	184	178,2	178,2
190	4,5	2,9	184	184	189,8	4,5	190	184,2	184,2
197	4,5	2,9	190	190	195,8	4,5	197	191,2	191,2
203	4,5	2,9	197	197	202,8	4,5	203	197,2	197,2
210	4,5	2,9	203	203	208,8	4,5	210	204,2	204,2
216	4,5	2,9	210	210	215,8	4,5	216	210,2	210,2
222	4,5	2,9	216	216	221,8	4,5	222	216,2	216,2
228	4,5	2,9	222	222	227,8	4,5	228	222,2	222,2
235	4,5	2,9	229	229	234,8	4,5	235	229,2	229,2
241	4,5	2,9	235	235	240,8	4,5	241	235,2	235,2
248	4,5	2,9	241	241	246,8	4,5	248	242,2	242,2
254	4,5	2,9	248	248	253,8	4,5	254	248,2	248,2
260	4,5	2,9	254	254	259,8	4,5	260	254,2	254,2
273	4,5	2,9	266	266	271,8	4,5	273	267,2	267,2
286	4,5	2,9	279	279	284,8	4,5	286	280,2	280,2
299	4,5	2,9	292	292	297,8	4,5	299	293,2	293,2
311	4,5	2,9	304	304	309,8	4,5	311	305,2	305,2
337	4,5	2,9	330	330	335,8	4,5	337	331,2	331,2
362	4,5	2,9	355	355	360,8	4,5	362	356,2	356,2
388	4,5	2,9	381	381	386,8	4,5	388	382,2	382,2
412	4,5	2,9	405	405	410,8	4,5	412	406,2	406,2
438	4,5	2,9	431	431	436,8	4,5	438	432,2	432,2
463	4,5	2,9	456	456	461,8	4,5	463	457,2	457,2

Corda 5,34

Section 5,34

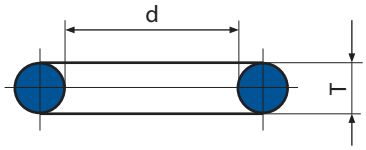

O-RING rif. AS 568 A/B.S. 1806

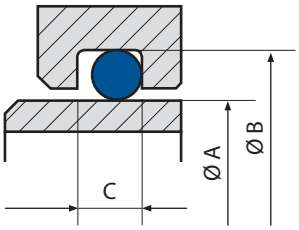

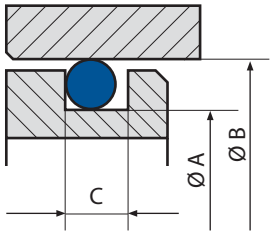

Rif. n°	AS/BS	d	T	Tenuta stelo *Rod application*				Tenuta pistone *Piston application*			
				f 7 A	H 9 B Hydro.	H 9 B Pneum.	± 0,2 C	H 8 B	h 9 A Hydro.	h 9 A Pneum.	± 0,2 C
OR 6150	325	**37,47**	**5,34**	38	47,4	Su richiesta *On request*	7	48	38,6	Su richiesta *On request*	7
OR 6162	326	**40,65**	**5,34**	41	50,4		7	52	42,6		7
OR 6175	327	**43,82**	**5,34**	44	53,4		7	55	45,6		7
OR 6187	328	**47**	**5,34**	47	56,4		7	58	48,6		7
OR 6200	329	**50,16**	**5,34**	50	59,4		7	61	51,6		7
OR 6212	330	**53,34**	**5,34**	53	62,4		7	64	54,6		7
OR 6225	331	**56,52**	**5,34**	57	66,4		7	68	58,6		7
OR 6237	332	**59,69**	**5,34**	60	69,4		7	70	60,6		7
OR 6250	333	**62,87**	**5,34**	63	72,4		7	73	63,6		7
OR 6262	334	**66,04**	**5,34**	66	75,4		7	77	67,6		7
OR 6275	335	**69,22**	**5,34**	69	78,4		7	80	70,6		7
OR 6287	336	**72,39**	**5,34**	73	82,4		7	83	73,6		7
OR 178	-	**74,63**	**5,34**	75	84,4		7	85	75,6		7
OR 6300	337	**75,57**	**5,34**	76	85,4		7	86	76,6		7
OR 6312	338	**78,74**	**5,34**	79	88,4		7	90	80,6		7
OR 181	-	**79,77**	**5,34**	80	89,4		7	90	80,6		7
OR 6325	339	**81,92**	**5,34**	82	91,4		7	92	82,6		7
OR 6337	340	**85,09**	**5,34**	85	94,4		7	95	85,6		7
OR 6350	341	**88,27**	**5,34**	88	97,4		7	98	88,6		7
OR 185	-	**89,69**	**5,34**	90	99,4		7	100	90,6		7
OR 6362	342	**91,44**	**5,34**	92	101,4		7	102	92,6		7
OR 6375	343	**94,62**	**5,34**	95	104,4		7	105	95,6		7
OR 6387	344	**97,79**	**5,34**	98	107,4		7	108	98,6		7
OR 189	-	**100**	**5,34**	100	109,4		7	110	100,6		7
OR 6400	345	**101**	**5,34**	101	110,4		7	111	101,6		7
OR 6412	346	**104,1**	**5,34**	104	113,4		7	115	105,6		7
OR 6425	347	**107,2**	**5,34**	107	116,4		7	118	108,6		7
OR 193	-	**109,5**	**5,34**	110	119,4		7	120	110,6		7
OR 6437	348	**110,5**	**5,34**	111	120,4		7	121	111,6		7
OR 6450	349	**113,7**	**5,34**	114	123,4		7	125	115,6		7
OR 199	-	**117,5**	**5,34**								
OR 201	-	**120,7**	**5,34**								
OR 203	-	**123,8**	**5,34**	**Sconsigliate per tenute dinamiche** *Not suitable for dynamic applications*							
OR 206	-	**127**	**5,34**								
OR 208	-	**130,2**	**5,34**								
OR 210	-	**133,4**	**5,34**								
OR 213	-	**136,5**	**5,34**								
OR 215	-	**139,7**	**5,34**								
OR 217	-	**142,9**	**5,34**								
OR 219	-	**146,1**	**5,34**								

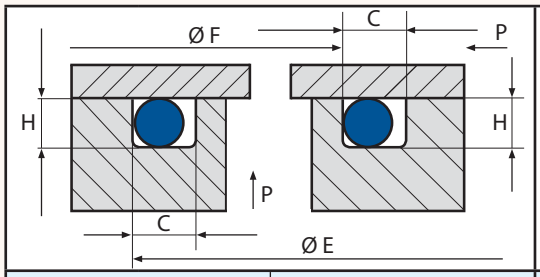

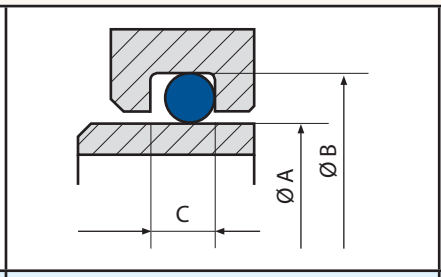

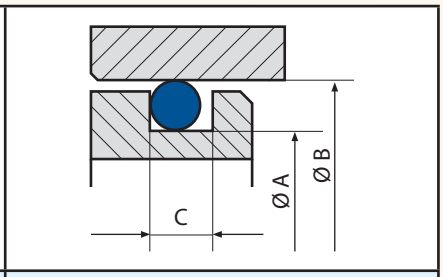

Pressione interna	Internal pression	Pressione esterna	External pression	Tenuta stelo	Rod application		Tenuta pistone	Piston application	
H 11 E	± 0,2 C	+ 0,1 0 H	h 11 F	f 7 A	H 11 B	± 0,2 C	H 8 B	h 11 A	± 0,2 C
48	7	4,5	38	38	47	7	48	39	7
52	7	4,5	41	41	50	7	52	43	7
55	7	4,5	44	44	53	7	55	46	7
58	7	4,5	47	47	56	7	58	49	7
61	7	4,5	50	50	59	7	61	52	7
64	7	4,5	53	53	62	7	64	55	7
68	7	4,5	57	57	66	7	68	59	7
70	7	4,5	60	60	69	7	70	61	7
73	7	4,5	63	63	72	7	73	64	7
77	7	4,5	66	66	75	7	77	68	7
80	7	4,5	69	69	78	7	80	71	7
83	7	4,5	73	73	82	7	83	74	7
85	7	4,5	75	75	84	7	85	76	7
86	7	4,5	76	76	85	7	86	77	7
90	7	4,5	79	79	88	7	90	81	7
90	7	4,5	80	80	89	7	90	81	7
92	7	4,5	82	82	91	7	92	83	7
95	7	4,5	85	85	94	7	95	86	7
98	7	4,5	88	88	97	7	98	89	7
100	7	4,5	90	90	99	7	100	91	7
102	7	4,5	92	92	101	7	102	93	7
105	7	4,5	95	95	104	7	105	96	7
108	7	4,5	98	98	107	7	108	99	7
110	7	4,5	100	100	109	7	110	101	7
111	7	4,5	101	101	110	7	111	102	7
115	7	4,5	104	104	113	7	115	106	7
118	7	4,5	107	107	116	7	118	109	7
120	7	4,5	110	110	119	7	120	111	7
121	7	4,5	111	111	120	7	121	112	7
125	7	4,5	114	114	123	7	125	116	7
128	7	4,5	118	118	127	7	128	119	7
132	7	4,5	121	121	130	7	132	123	7
135	7	4,5	124	124	133	7	135	126	7
137	7	4,5	127	127	136	7	137	128	7
140	7	4,5	130	130	139	7	140	131	7
145	7	4,5	134	134	143	7	145	136	7
147	7	4,5	137	137	146	7	147	138	7
150	7	4,5	140	140	149	7	150	141	7
153	7	4,5	143	143	152	7	153	144	7
156	7	4,5	146	146	155	7	156	147	7

Corda 5,34

Section 5,34

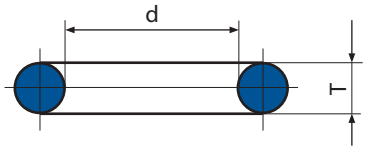

O-RING rif. AS 568 A/B.S. 1806

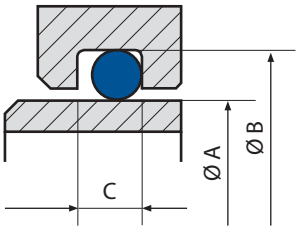

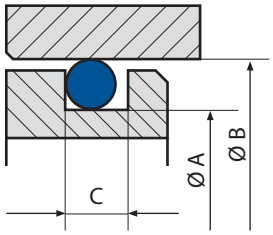

Rif. n°	AS/BS	d	T	Tenuta stelo *Rod application*				Tenuta pistone *Piston application*			
				f 7 A	H 9 B Hydro.	H 9 B Pneum.	± 0,2 C	H 8 B	h 9 A Hydro.	h 9 A Pneum.	± 0,2 C
OR 221	-	**149,2**	**5,34**								
OR 6600	361	**151,77**	**5,34**								
OR 6625	362	**158,11**	**5,34**								
OR 6645	363	**164,46**	**5,34**								
OR 6670	364	**170,82**	**5,34**								
OR 6700	365	**177,16**	**5,34**								
OR 6720	366	**183,51**	**5,34**								
OR 6745	367	**189,86**	**5,34**								
OR 6775	368	**196,21**	**5,34**								
OR 6795	369	**202,56**	**5,34**								
OR 6820	370	**208,91**	**5,34**								
OR 6850	371	**215,26**	**5,34**								
OR 6870	372	**221,61**	**5,34**	**Sconsigliate per tenute dinamiche** *Not suitable for dynamic applications*							
OR 6895	373	**227,96**	**5,34**								
OR 6920	374	**234,31**	**5,34**								
OR 6945	375	**240,66**	**5,34**								
OR 6975	376	**247,01**	**5,34**								
OR 6995	377	**253,36**	**5,34**								
OR 61050	378	**266,06**	**5,34**								
OR 61100	379	**278,76**	**5,34**								
OR 61150	380	**291,46**	**5,34**								
OR 61200	381	**304,16**	**5,34**								
OR 61300	382	**327,56**	**5,34**								
OR 61400	383	**354,96**	**5,34**								
OR 61500	384	**380,36**	**5,34**								
OR 61600	385	**405,26**	**5,34**								
OR 61700	386	**430,66**	**5,34**								
OR 61800	387	**456,06**	**5,34**								
OR 61900	388	**481,41**	**5,34**								
OR 62000	389	**506,81**	**5,34**								
OR 62100	390	**532,2**	**5,34**								

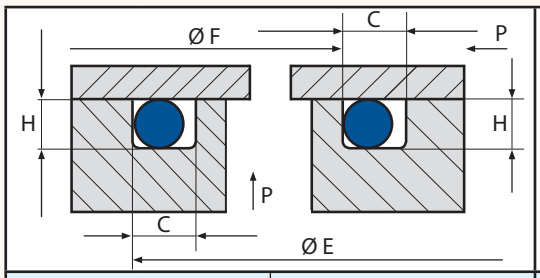

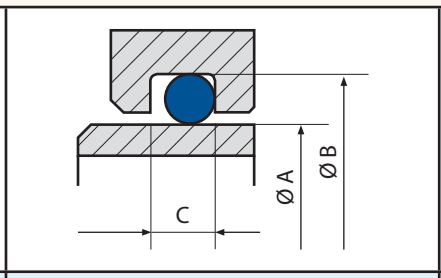

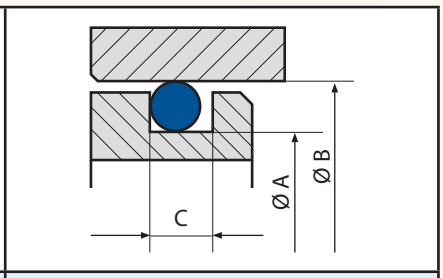

Pressione interna	Internal pression	Pressione esterna	External pression	Tenuta stelo	Rod application		Tenuta pistone	Piston application	
H 11 E	± 0,2 C	+ 0,1 0 H	h 11 F	f 7 A	H 11 B	± 0,2 C	H 8 B	h 11 A	± 0,2 C
160	7	4,5	150	150	159	7	160	151	7
162	7	4,5	152	152	161	7	162	153	7
169	7	4,5	158	158	167	7	169	160	7
175	7	4,5	165	165	174	7	175	166	7
181	7	4,5	171	171	180	7	181	172	7
188	7	4,5	177	177	186	7	188	179	7
194	7	4,5	184	184	193	7	194	185	7
200	7	4,5	190	190	199	7	200	191	7
207	7	4,5	196	196	205	7	207	198	7
213	7	4,5	202	202	211	7	213	204	7
220	7	4,5	209	209	218	7	220	211	7
226	7	4,5	215	215	224	7	226	217	7
232	7	4,5	222	222	231	7	232	223	7
239	7	4,5	228	228	237	7	239	230	7
245	7	4,5	234	234	243	7	245	236	7
251	7	4,5	241	241	250	7	251	242	7
258	7	4,5	247	247	256	7	258	249	7
264	7	4,5	253	253	262	7	264	255	7
277	7	4,5	266	266	275	7	277	268	7
289	7	4,5	279	279	288	7	289	280	7
302	7	4,5	291	291	300	7	302	293	7
315	7	4,5	304	304	315	7	315	306	7
338	7	4,5	328	328	337	7	338	329	7
366	7	4,5	355	355	364	7	366	357	7
391	7	4,5	380	380	389	7	391	382	7
416	7	4,5	405	405	414	7	416	407	7
441	7	4,5	431	431	440	7	441	432	7
467	7	4,5	456	456	465	7	467	458	7
492	7	4,5	481	481	490	7	492	483	7
517	7	4,5	507	507	516	7	517	508	7
543	7	4,5	532	532	541	7	543	534	7

Corda 6,99

Section 6,99

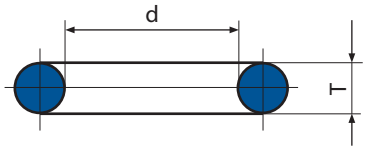

O-RING rif. AS 568 A/B.S. 1806

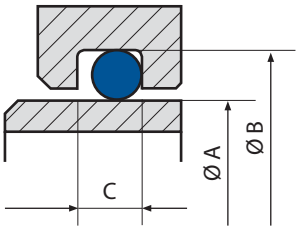

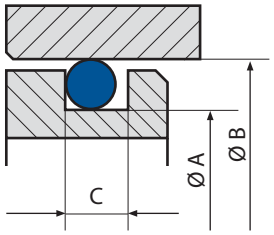

Rif. n°	AS/BS	d	T	Tenuta stelo *Rod application*				Tenuta pistone *Piston application*			
				f 7 A	H 9 B Hydro.	H 9 B Pneum.	± 0,2 C	H 8 B	h 9 A Hydro.	h 9 A Pneum.	± 0,2 C
OR 8450	425	**113,7**	**6,99**	114	126,4	Su richiesta *On request*	9,5	127	114,6	Su richiesta *On request*	9,5
OR 197	-	**114,7**	**6,99**	115	127,4		9,5	128	115,6		9,5
OR 8462	426	**116,8**	**6,99**	117	129,4		9,5	130	117,6		9,5
OR 8475	427	**120**	**6,99**	120	132,4		9,5	135	122,6		9,5
OR 8487	428	**123,2**	**6,99**	123	135,4		9,5	137	124,6		9,5
OR 204	-	**124,6**	**6,99**	125	137,4		9,5	138	125,6		9,5
OR 8500	429	**126,4**	**6,99**	126	138,4		9,5	140	127,6		9,5
OR 8512	430	**129,5**	**6,99**	130	142,4		9,5	143	130,6		9,5
OR 8525	431	**132,7**	**6,99**	133	145,4		9,5	146	133,6		9,5
OR 211	-	**134,5**	**6,99**	135	147,4		9,5	148	135,6		9,5
OR 8537	432	**135,9**	**6,99**	136	148,4		9,5	150	137,6		9,5
OR 8550	433	**139,1**	**6,99**	139	151,4		9,5	153	140,6		9,5
OR 8562	434	**142,2**	**6,99**	142	154,4		9,5	156	143,6		9,5
OR 8575	435	**145,4**	**6,99**	145	157,4		9,5	160	147,6		9,5
OR 8587	436	**148,6**	**6,99**	149	161,4		9,5	162	149,6		9,5
OR 8600	437	**151,8**	**6,99**	152	164,4		9,5	165	152,6		9,5
OR 223	-	**155,6**	**6,99**	156	168,4		9,5	170	157,6		9,5
OR 8625	438	**158,1**	**6,99**	158	170,4		9,5	172	159,6		9,5
OR 225	-	**159,5**	**6,99**	160	172,4		9,5	173	160,6		9,5
OR 226	-	**161,9**	**6,99**	162	174,4		9,5	175	162,6		9,5
OR 8650	439	**164,5**	**6,99**	165	177,4		9,5	178	165,6		9,5
OR 228	-	**166,7**	**6,99**	167	179,4		9,5	180	167,6		9,5
OR 229	-	**168,3**	**6,99**	168	180,4		9,5	182	169,6		9,5
OR 8675	440	**170,8**	**6,99**	170	182,4		9,5	184	171,6		9,5
OR 231	-	**174,6**	**6,99**	175	187,4		9,5	188	175,6		9,5
OR 8700	441	**177,2**	**6,99**	178	190,4		9,5	191	178,6		9,5
OR 233	-	**181**	**6,99**	180	192,4		9,5	195	182,6		9,5
OR 8725	442	**183,5**	**6,99**	184	196,4		9,5	197	184,6		9,5
OR 235	-	**187,3**	**6,99**	188	200,4		9,5	200	187,6		9,5
OR 8750	443	**189,9**	**6,99**	190	202,4		9,5	203	190,6		9,5
OR 237	-	**193,7**	**6,99**	194	206,4		9,5	207	194,6		9,5
OR 8775	444	**196,2**	**6,99**	196	208,4		9,5	210	197,6		9,5
OR 239	-	**200**	**6,99**	200	212,4		9,5	214	201,6		9,5
OR 8800	445	**202,6**	**6,99**	203	215,4		9,5	216	203,6		9,5
OR 8825	445A	**208,9**	**6,99**	210	222,4		9,5	222	209,6		9,5
OR 8850	446	**215,3**	**6,99**	215	227,4		9,5	230	217,6		9,5
OR 8875	446A	**221,6**	**6,99**	222	234,4		9,5	235	222,6		9,5
OR 8900	447	**227,9**	**6,99**	230	242,4		9,5	242	229,6		9,5
OR 8925	447A	**234,3**	**6,99**	235	247,4		9,5	250	237,6		9,5
OR 8950	448	**240,7**	**6,99**	240	252,4		9,5	255	242,6		9,5

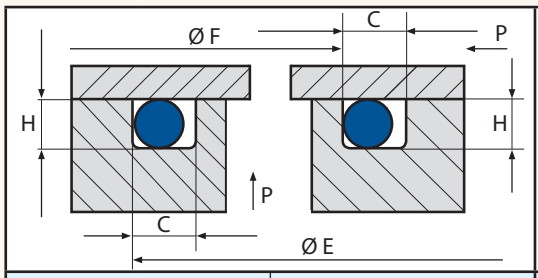

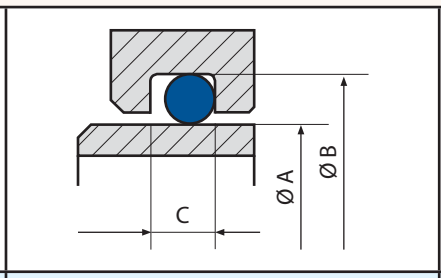

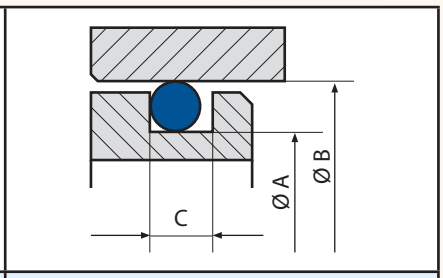

Pressione interna *Internal pression*		Pressione esterna *External pression*		Tenuta stelo *Rod application*			Tenuta pistone *Piston application*		
H 11 E	± 0,2 C	+ 0,1 0 H	h 11 F	f 7 A	H 11 B	± 0,2 C	H 8 B	h 11 A	± 0,2 C
127	9,,5	6	114	114	126	9,5	127	115	9,5
128	9,5	6	115	115	127	9,5	128	116	9,5
130	9,5	6	117	117	129	9,5	130	118	9,5
135	9,5	6	120	120	132	9,5	135	123	9,5
137	9,5	6	123	123	135	9,5	137	125	9,5
138	9,5	6	125	125	137	9,5	138	126	9,5
140	9,5	6	126	126	138	9,5	140	128	9,5
143	9,5	6	130	130	142	9,5	143	131	9,5
146	9,5	6	133	133	145	9,5	146	134	9,5
148	9,5	6	135	135	147	9,5	148	136	9,5
150	9,5	6	136	136	148	9,5	150	138	9,5
153	9,5	6	139	139	151	9,5	153	141	9,5
156	9,5	6	142	142	154	9,5	156	144	9,5
160	9,5	6	145	145	157	9,5	160	148	9,5
162	9,5	6	149	149	161	9,5	162	150	9,5
165	9,5	6	152	152	164	9,5	165	153	9,5
170	9,5	6	156	156	168	9,5	170	158	9,5
172	9,5	6	158	158	170	9,5	172	160	9,5
173	9,5	6	160	160	172	9,5	173	161	9,5
175	9,5	6	162	162	174	9,5	175	163	9,5
178	9,5	6	165	165	177	9,5	178	166	9,5
180	9,5	6	167	167	179	9,5	180	168	9,5
182	9,5	6	168	168	180	9,5	182	170	9,5
184	9,5	6	170	170	182	9,5	184	172	9,5
188	9,5	6	175	175	187	9,5	188	176	9,5
191	9,5	6	178	178	190	9,5	191	179	9,5
195	9,5	6	180	180	192	9,5	195	183	9,5
197	9,5	6	184	184	196	9,5	197	185	9,5
200	9,5	6	188	188	200	9,5	200	188	9,5
203	9,5	6	190	190	202	9,5	203	191	9,5
207	9,5	6	194	194	206	9,5	207	195	9,5
210	9,5	6	196	196	208	9,5	210	198	9,5
214	9,5	6	200	200	212	9,5	214	202	9,5
216	9,5	6	203	203	215	9,5	216	204	9,5
222	9,5	6	210	210	222	9,5	222	210	9,5
230	9,5	6	215	215	227	9,5	230	218	9,5
235	9,5	6	222	222	234	9,5	235	223	9,5
242	9,5	6	230	230	242	9,5	242	230	9,5
250	9,5	6	235	235	247	9,5	250	238	9,5
255	9,5	6	240	240	252	9,5	255	243	9,5

Corda 6,99

Section 6,99

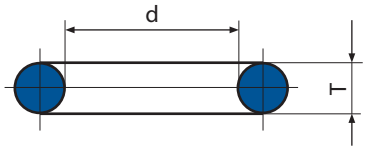

O-RING rif. AS 568 A/B.S. 1806

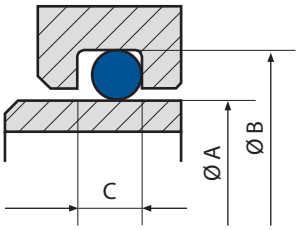

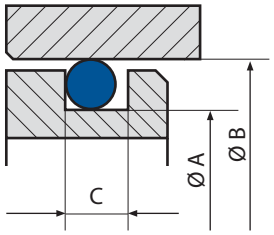

Rif. n°	AS/BS	d	T	Tenuta stelo *Rod application*				Tenuta pistone *Piston application*			
				f 7 A	H 9 B Hydro.	H 9 B Pneum.	± 0,2 C	H 8 B	h 9 A Hydro.	h 9 A Pneum.	± 0,2 C
OR 8975	448A	**247**	**6,99**	248	260,4	Su richiesta *On request*	9,5	260	247,6	Su richiesta *On request*	9,5
OR 81000	449	**253,3**	**6,99**	255	267,4		9,5	270	257,6		9,5
OR 81025	449A	**259,7**	**6,99**	260	272,4		9,5	275	262,6		9,5
OR 81050	450	**266,1**	**6,99**	265	277,4		9,5	280	267,6		9,5
OR 81075	450A	**272,4**	**6,99**	273	285,4		9,5	286	273,6		9,5
OR 81100	451	**278,7**	**6,99**	280	292,4		9,5	295	282,6		9,5
OR 81125	451A	**285,2**	**6,99**	285	297,4		9,5	300	287,6		9,5
OR 81150	452	**291,5**	**6,99**	292	304,4		9,5	305	292,6		9,5
OR 81175	452A	**297,8**	**6,99**	300	312,4		9,5	315	302,6		9,5
OR 81200	453	**304,1**	**6,99**	305	317,4		9,5	320	307,6		9,5
OR 81250	454	**316,9**	**6,99**	318	330,4		9,5	330	317,6		9,5
OR 81300	455	**329,5**	**6,99**	330	342,4		9,5	345	332,6		9,5
OR 81350	456	**342,3**	**6,99**	342	354,4		9,5	355	342,6		9,5
OR 81400	457	**354,9**	**6,99**	355	367,4		9,5	370	357,6		9,5
OR 81450	458	**367,7**	**6,99**	370	382,4		9,5	380	367,6		9,5
OR 81500	459	**380,3**	**6,99**	380	392,4		9,5	395	382,6		9,5
OR 81550	460	**393,1**	**6,99**	393	405,4		9,5	410	397,6		9,5
OR 81600	461	**405,3**	**6,99**								
OR 81650	462	**418**	**6,99**								
OR 81700	463	**430,7**	**6,99**								
OR 81750	464	**443,4**	**6,99**	**Sconsigliate per tenute dinamiche** *Not suitable for dynamic applications*							
OR 81800	465	**456,1**	**6,99**								
OR 81850	466	**468,8**	**6,99**								
OR 81900	467	**481,5**	**6,99**								
OR 81950	468	**494,2**	**6,99**								
OR 82000	469	**506,9**	**6,99**								
OR 82100	470	**532,3**	**6,99**								
OR 82200	471	**557,7**	**6,99**								
OR 82300	472	**582,7**	**6,99**								
OR 82400	473	**608,1**	**6,99**								
OR 82500	474	**633,5**	**6,99**								
OR 82600	475	**658,9**	**6,99**								

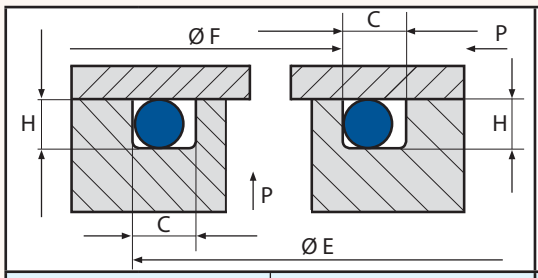

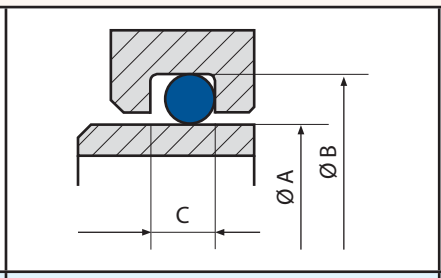

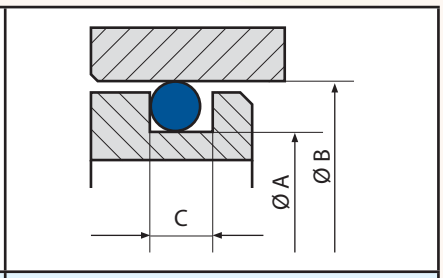

Pressione interna	Internal pression	Pressione esterna	External pression	Tenuta stelo	Rod application		Tenuta pistone	Piston application	
H 11 E	± 0,2 C	+ 0,1 0 H	h 11 F	f 7 A	H 11 B	± 0,2 C	H 8 B	h 11 A	± 0,2 C
260	9,5	6	248	248	260	9,5	260	248	9,5
270	9,5	6	255	255	267	9,5	270	258	9,5
275	9,5	6	260	260	272	9,5	275	263	9,5
280	9,5	6	265	265	277	9,5	280	268	9,5
286	9,5	6	273	273	285	9,5	286	274	9,5
295	9,5	6	280	280	292	9,5	295	283	9,5
300	9,5	6	285	285	297	9,5	300	288	9,5
305	9,5	6	292	292	304	9,5	305	293	9,5
315	9,5	6	300	300	312	9,5	315	303	9,5
320	9,5	6	305	305	317	9,5	320	308	9,5
330	9,5	6	318	318	330	9,5	330	318	9,5
345	9,5	6	330	330	342	9,5	345	333	9,5
355	9,5	6	342	342	354	9,5	355	343	9,5
370	9,5	6	355	355	367	9,5	370	358	9,5
380	9,5	6	370	370	382	9,5	380	368	9,5
395	9,5	6	380	380	392	9,5	395	383	9,5
410	9,5	6	393	393	405	9,5	410	398	9,5
420	9,5	6	405	405	417	9,5	420	408	9,5
435	9,5	6	420	420	432	9,5	435	423	9,5
445	9,5	6	430	430	442	9,5	445	433	9,5
460	9,5	6	445	445	457	9,5	460	448	9,5
475	9,5	6	460	460	472	9,5	475	463	9,5
485	9,5	6	470	470	482	9,5	485	473	9,5
500	9,5	6	485	485	497	9,5	500	488	9,5
510	9,5	6	495	495	507	9,5	510	498	9,5
525	9,5	6	510	510	522	9,5	525	513	9,5
550	9,5	6	535	535	547	9,5	550	538	9,5
575	9,5	6	560	560	572	9,5	575	563	9,5
600	9,5	6	585	585	597	9,5	600	588	9,5
625	9,5	6	610	610	622	9,5	625	613	9,5
650	9,5	6	635	635	647	9,5	650	638	9,5
675	9,5	6	660	660	672	9,5	675	663	9,5

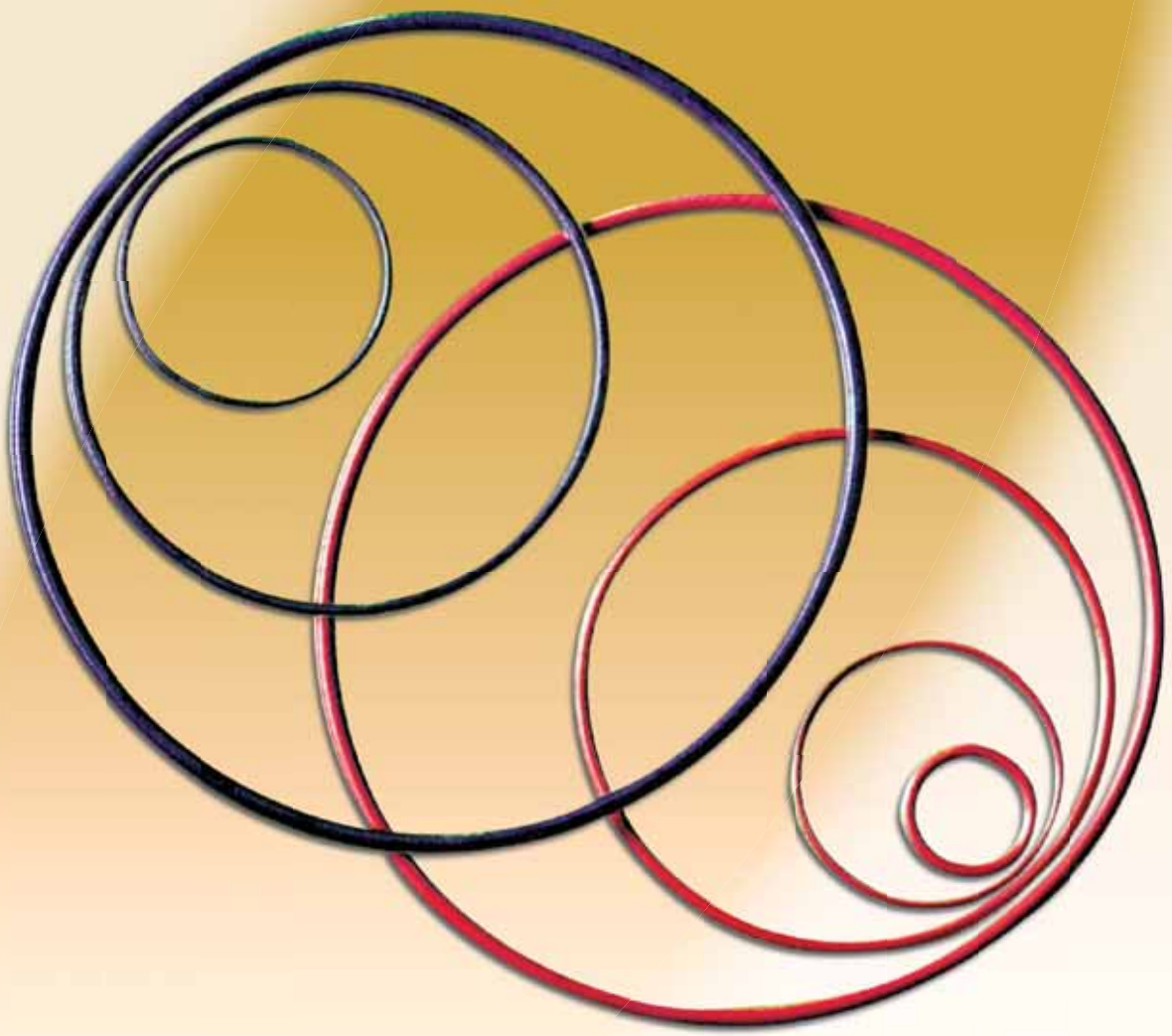

O-RINGS IN ELASTOMERO INCAPSULATI FEP/PFA

FEP/PFA ENCAPSULATED ELASTOMER O-RINGS

Generalità

Gli anelli FEP-SEALS sono resistenti ai solventi ed ai prodotti chimici in genere, salvo i metalli alcalini fusi, il fluoro ed alcuni composti alogenati ad alte temperature.
Possiedono una memoria elastica vicina a quella degli O-rings in gomma.
Il polimero FEP presenta un valore di attrito estremamente favorevole (0.1 ÷ 0.2) ed una permeabilità ai gas molto bassa.
Si può dire che rappresenta una soluzione di tenuta ottimale in condizioni difficili.

General

FEP-SEALS are solvent resistant and chemically inert, except for attack by alkaline metals, fluorine and some halogenated compounds at high temperature.
They have an elastomeric memory near that of rubber O-rings.
FEP polymer has an extremely low coefficient of friction (0.1 ÷ 0.2) and very low permeability to gases.
We can say that it is a virtually universal seal for use in difficult situations.

Funzionamento

Il FEP-SEAL funziona come fluido ad alta viscosità, la pressione esercitata sull'anello è praticamente trasmessa intatta in tutte le direzioni.
Il FEP garantisce la tenuta, mentre l'anima in elastomero assicura il permanente contatto con il punto di tenuta.

Function

The FEP-SEAL behaves like a highly viscous fluid, any pressure exerted on the seal is transmitted practically undiminished in all directions.
FEP encapsulation provides the sealing while the constant pressure on to the sealing point is assured by the elastomeric core.

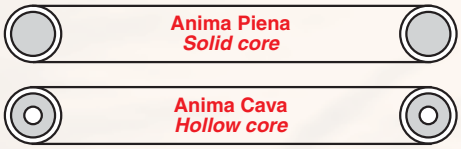

Deformazione permanente a compressione

Da prove effettuate risulta che la combinazione delle proprietà meccaniche dei fluoroelastomeri e dei siliconi con la resistenza chimica delle resine PTFE FEP/PFA consente ai FEP-SEALS di resistere alla compressione e mantenere le proprietà meccaniche.

Compression set

The results of tests demonstrate that, by combining the mechanical properties of fluoroelastomer or siliconelastomer and the chemical resistance of PTFE FEP/PFA resins, FEP-SEALS resist to compression set and retain its mechanical properties.

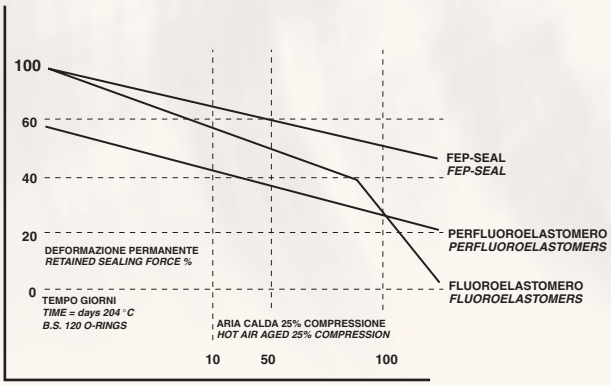

Vantaggi

- Resistenza chimica
- Basso coefficiente di attrito
- Ampio campo di temperature di esercizio
- Assenza di effetto di incollaggio sulla superficie
- Basso assorbimento di solventi
- Resistenza alla compressione
- Resistenza alla pressione
- Fisiologicamente inerte può essere sterilizzato
- Nessuna contaminazione se usato in applicazioni alimentari o medicali.

Advantages

- *Chemical resistance*
- *Low friction surface*
- *Wide temperature range*
- *Non stick*
- *Low absorption of solvents*
- *High compression set resistance*
- *High pressure capability*
- *Physiologically harmless can be sterilised*
- *No contamination when used with foodstuffs and pharmaceutical and medical products.*

Materiali

I FEP-SEALS sono fornibili con incapsulatura in polimero di PTFE FEP o PFA. Le caratteristiche di questi due polimeri sono essenzialmente simili salvo la capacità del PFA di superare i 205°C di temperatura continua.

Materials

FEP-SEALS are available with FEP or PFA PTFE polymer incapsulation. The capabilities of these two polymers are essentially similar except that PFA can be used with continuous temperature over 205°C.

Dimensioni

FEP-SEALS possono essere prodotti seguendo le dimensioni degli O-rings secondo Norme BS 1806-AS568A con alcune limitazioni riguardo al diametro interno e la sezione della corda come indicato nella tabella F.

Sizes

FEP-SEALS can be produced following the standard sizes of O-rings according to BS 1806-AS568A with some limitations on the minimum size of inner diameter and the cross section see table F.

Tabella F

Tabella F

Sezione corda *Cross section*	"Spessore rivestimento *Fep encapsulation thickness"*
1,60 mm	0,203 mm
1,78 mm	0,203 mm
2,00 mm	0,203 mm
2,40 mm	0,254 mm
2,62 mm	0,254 mm
3,00 mm	0,254 mm
3,53 mm	0,305 mm
4,00 mm	0,305 mm
5,00 mm	0,381 mm
5,33 mm	0,508 mm
5,70 mm	0,508 mm
6,99 mm	0,508 mm
8,00 mm	0,508 mm
8,40 mm	0,508 mm
9,50 mm	0,508 mm
10,00 mm	0,508 mm
12,00 mm	0,762 mm

Tabella F / ***Tabella F***

Sezione corda *Cross section*	Diametro interno minimo / *Minimum internal diameter*	
	Produzione standard *Standard production*	Produzione speciale *Special production*
1,60 mm	-	7,20 mm
1,78 mm	11,00 mm	7,20 mm
2,00 mm	11,00 mm	7,20 mm
2,62 mm	13,50 mm	9,30 mm
3,00 mm	13,50 mm	10,00 mm
3,53 mm	16,30 mm	12,00 mm
4,00 mm	23,00 mm	18,00 mm
5,00 mm	25,00 mm	20,00 mm
5,33 mm	25,00 mm	20,00 mm
6,00 mm	28,00 mm	25,00 mm
6,99 mm	32,00 mm	32,00 mm
8,00 mm	65,00 mm	50,80 mm
9,00 mm	70,00 mm	50,80 mm
10,00 mm	85,00 mm	57,00 mm
12,00 mm	100,00 mm	70,00 mm
12,70 mm	150,00 mm	70,00 mm

Temperatura

- Incapsulatura FEP:
-60°C +205°C
Brevi periodi fino a +260°C

- Incapsulatura PFA:
-60°C +260°C
Brevi periodi fino a +300°C

L'anima può essere Viton oppure Silicone.
Le qualità impiegate sono:
VITON GRADO E-60C
SILICONE GRADO ZZR 7658

Durezza

Le durezze indicative sono:
- 85 ÷ 90 Shore A per anima silicone MVQ
- 90 ÷ 95 Shore A per anima fluoroelastomero FPM
- 75 ÷ 80 Shore A per anima cava silicone MVQ

Valore di schiacciamento suggerito
- 15 ÷ 22% per applicazioni statiche
- 10 ÷ 15% per applicazioni dinamiche
- 8 ÷ 10% per applicazioni pneumatiche

Temperature

- FEP incapsulation:
-60°C +205°C
Short duration up to +260°C

- PFA incapsulation:
-60°C +260°C
Short duration up to +300°C

Core materials are either Viton or Silicone.
Utilized qualities are:
VITON GRADE E-60C
SILICONE GRADE ZZR 7658

Hardness

Shore hardness as an average overall are:
- 85 ÷ 90 Shore A for solid core silicone MVQ
- 90 ÷ 95 Shore A for solid core fluoroelastomer FPM
- 75 ÷ 80 Shore A for hollow core silicone MVQ

Degree of recommended squeeze
- 15 ÷ 22% for static applications
- 10 ÷ 15% for dynamic applications
- 8 ÷ 10% for pneumatic applications

Istruzioni per il montaggio dei FEP -SEALS

- Tutte le superfici di contatto dei FEP-SEALS devono essere esenti da spigoli vivi, fori, tracce d'utensile. Raccomandiamo una finitura di 0.5 µm nella sede e di 0.25 µm sull'albero.

- Lubrificare il FEP-SEAL e le superfici di contatto con olio pulito o grasso.

- Se il montaggio dovesse risultare difficile è conveniente preriscaldare l'anello in acqua bollente (100°C) per alcuni minuti.
  Questa operazione ammorbidisce l'anello che, con una operazione di estensione o contrazione, può essere montato più facilmente.
  Montare l'anello quando è ancora caldo, una volta raffreddato ritornerà alle dimensioni originali.

Viton max estensione 7%
Silicone max estensione 15-20%

Le guarnizioni incapsulate per raccordi KAMLOCK sono state studiate per una tenuta non contaminante sui raccordi per tubi.

Instructions for installing FEP-SEALS

- *All surfaces that FEP-SEALS will contact in operation should be free from sharp edges, holes, burss and deep scratches. A 0.5 µm finish is recommended on the bore, 0.25 µm finish on the shaft.*

- *Lubricate the FEP-SEAL and the contact surfaces with a clean light oil or grease.*

- *It is difficult to install a FEP-SEAL in some applications, it is therefore recommended to immerse it in boiling water (100°C) for a few minutes.*
  This operation softens and enlarges the O-ring and allows it to be fitted more easily.
  Install the O-ring when it is still hot and it will return to its original size when cooled.

Viton max stretching 7%
Silicone max stretching 15-20%

The encapsulated gasket for KAMLOCK coupling are designed as non-contaminating hose coupling seals.

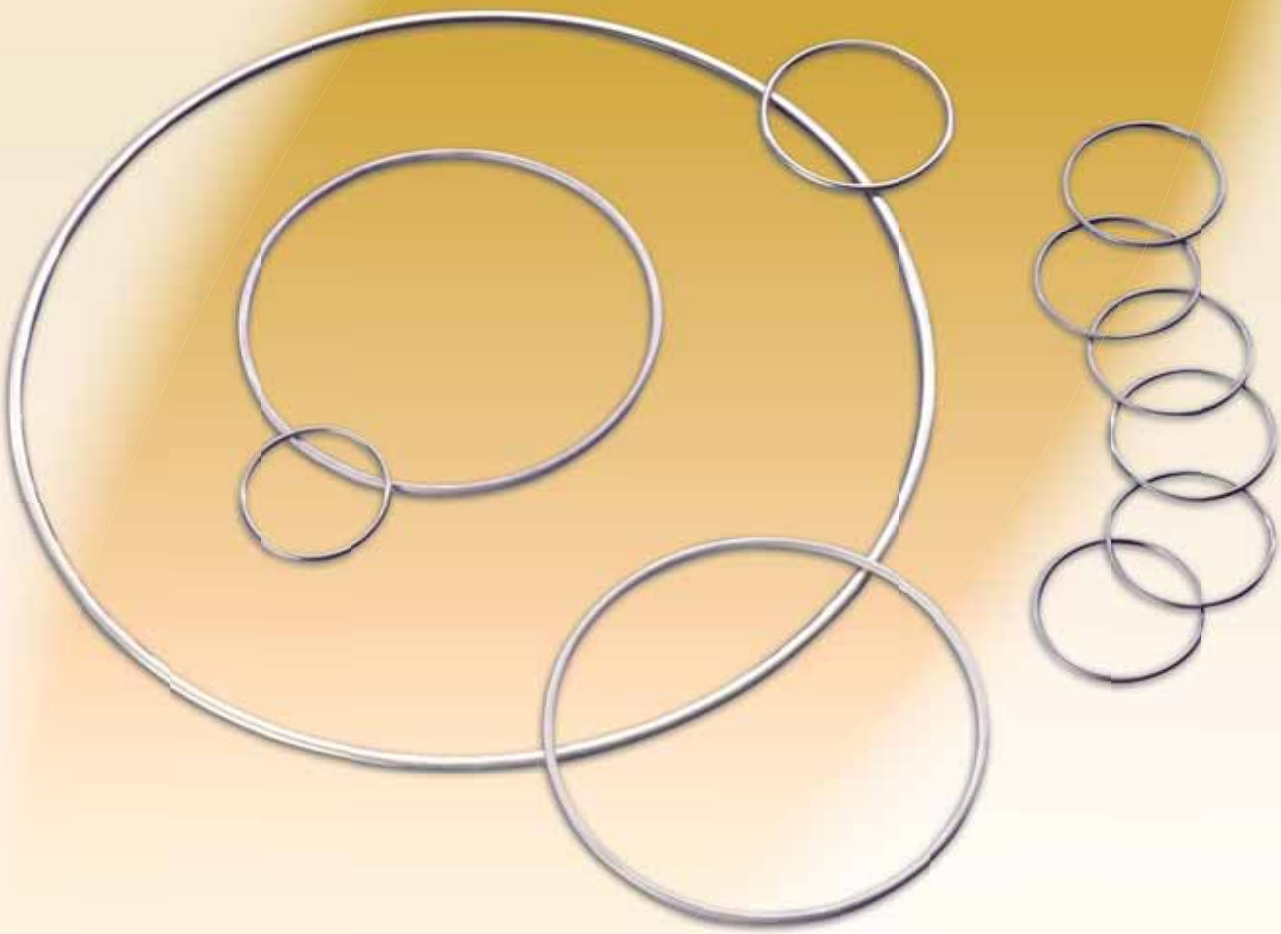

GUARNIZIONI METALLICHE
METAL SEALS

Queste guarnizioni, concepite e sviluppate per esigenze nucleari, aeronautiche e aerospaziali, hanno trovato un largo impiego nei settori motoristico, chimico, farmaceutico, petrolchimico ed off-shore dove è richiesto un livello di tenuta che dia le migliori garanzie.

Le guarnizioni metalliche sono l'unica soluzione possibile quando le condizioni operative non consentono l'impiego di guarnizioni in elastomero o polimeriche.

These seals studied and developped to suit nuclear, aeronautical and aerospace applications are now largely used in engines, chemical and petrolchemical industries, off shore, where it is requested the highest possible sealing level.

The metal seals are the only possible solution where conventional seals, such as rubber, elastomers, and plastic, cannot work satisfactorily.

Come funzionano?

Sfruttando l'elasticità dei metalli ed operando entro questo campo, seppur piccolo, si riesce a garantire la tenuta in condizioni estreme.
Le applicazioni sono solo statiche e devono compensare unicamente movimenti tra due superfici piane.

How does a metal seal works?

The resilience of metal allows a "springback" against the loading faces and can guarantee the sealing under extreme conditions.
Seals are only for static applications and are installed between two flat surfaces.

Quando si usano?

Tutte le volte che per condizioni fisiche (temperatura, pressione) o per resistenza all'attacco chimico non è possibile l'uso di elastomeri o guarnizioni polimeriche energizzate.

Le guarnizioni metalliche possono garantire:
a) vuoto -10-11 Torr,
b) pressione fino a 7.000 Bar,
c) temperature estreme (–250°C a 1.100°C),
d) radiazioni: completamente insensibili.

Questi risultati si possono ottenere con la giusta scelta dei materiali e con una corretta applicazione.

Mettiamo a disposizione la ns esperienza tecnica per cercare la soluzione più idonea che soddisfi le aspettative dei clienti.

When are they used?

In all cases where difficult conditions (temperature, pressure, chemical attack) precludes the use of elastomers or energized polymeric seals.

Metal seals main characteristics are:
a) vacuum -10-11 Torr,
b) pressure up to 7.000 Bar,
c) extreme temperatures (–250°C to 1.100°C),
d) radiation: unlimited.

These performances can be obtained by choosing the right material for the right application.

We offer our experience in order to guarantee the most suitable solution to meet customer's requirements.

Come si montano?

Le guarnizioni metalliche, si montano tra due flange parallele, in grado di utilizzare lo schiacciamento che consente di lavorare entro il campo elastico del materiale e con una finitura delle superfici idonea a garantire la tenuta in funzione della natura del fluido da tenere.

Tre sono i modi base d'installazione:
a) cava aperta lato pressione e guarnizione sostenuta nel lato opposto,
b) cava tradizionale,
c) cava completamente aperta, ma guarnizione sostenuta sul lato opposto della pressione da un anello di ritegno.

How are they installed?

Metal seals, are installed between two flats, parallel surfaces in order to be compressed and obtain a sealing efficency considering material resilience and surface finishes suitable for the fluid to be sealed.

There are 3 basic installation systems:
a) open groove pressure side and seal supported on opposite side,
b) traditional groove,
c) open groove but seal supported on opposite side by a retainer plate.

Schema classico di applicazione
(vedi schema)

Types of configuration
(see scheme)

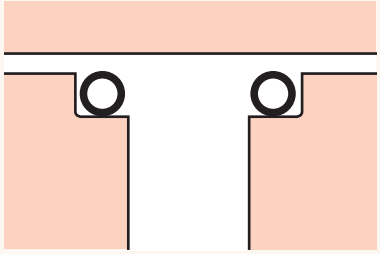

Cava aperta
Counterbore

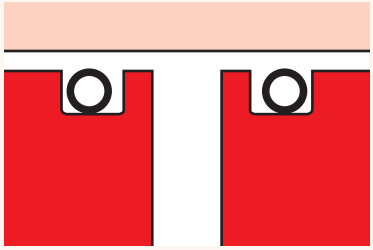

Cava
Groove

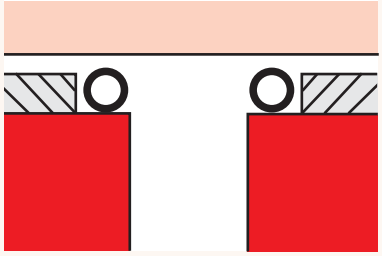

Anello di ritegno
Retainer plate

Finiture delle flange

Fondamentale per il successo di un'applicazione è la finitura delle superfici che, a seconda dei fluidi da tenere, varia come indicato nella tabella A.

Tabella A:

Flanges finish

It is absolutely important and depending of the medium to be sealed the values must be according to the following table A.

Table A:

Fluidi - Pressione ***Media - Pressure***	**Valori suggeriti** ***Recommended value***
Alto e Ultra alto vuoto - *Hard and Ultra-High Vacuum*	**0,2 Ra**
Criogenico - *Cryogenic*	**0,2 Ra**
Elio, Idrogeno, Freon - *Helium, Hydrogen, Freon*	**0,2 Ra**
Leggero vuoto e vapore - *Light vacuum and steam*	**0,4 Ra**
Azoto, aria, argon, benzina, acqua, olio e polimeri fusi *Nitrogen, air, argon, fuel, water, hydraulic oil an polymers*	**0,8 Ra**

Se la pressione supera i 700 bar si raccomanda una finitura inferiore a 0,4 Ra.

Se la pressione va oltre i 1500 bar si raccomanda una finitura inferiore a 0,2 Ra.

Per una buona tenuta è molto importante che sulle superfici non rimangano tracce di lavorazioni meccaniche.

If pressure is higher than 700 Bar, improve finish to 0,4 Ra.

If pressure is higher than 1500 Bar, improve finish to 0,2 Ra.

A good sealing efficiency it is also granted by avoiding all imperfections in the mating surfaces.

Spesso la placcatura o il rivestimento della guarnizione stessa compensano le imperfezioni delle superfici con la riduzione del coefficiente di attrito.
Per una corretta scelta bisogna tener conto della temperatura massima di lavoro e della forza di serraggio disponibile secondo la seguente tabella B.

The plating or coating of the seal penetrates the imperfections in the mating surfaces and reduces the coefficient of friction.
A good choice must consider the temperature value and the available load compression according to the following table B.

Tabella B:

Table B:

Codice ***Code***	**Tipo materiale** ***Finish material***	**Proprietà, utilizzo e limitazioni** ***Properties, uses and limitations***
A	Argento Silver	Rivestimento ideale, soffice con buona resistenza alle temperature ed alla corrosione, varietà di applicazioni, Tmax 430°C (ossidante), T650°C (non ossidante) *Ideal plating, soft (excellent anti-galling), good corrosion and temperatures resistance, wide variety of applications, Tmax 430°C (oxydizing), T650°C (non-oxydizing)*
O	Oro Gold	Tenero, eccellente resistenza ad ossidazione e prodotti chimici, Tmax 930°C *Soft, excellent chemical and oxidation resistance, Tmax 930°C*
R	Rame Copper	Relativamente tenero, basso costo, Tmax 930°C *Relatively soft, inexpensive, Tmax 930°C*
NP	Nickel	Duro, usato al posto dell'argento in ambienti ossidanti, Tmax 1200°C *Hard, used instead of silver in hot, oxydizing environments, Tmax 1200°C*
P	Piombo Lead	Molto tenero, eccellente per applicazioni criogeniche, usato per tenute a bassa compressione (70 N/mm max), Tmax 200°C *Extremely soft, excellent for cryogenics, used for low load seals (70 N/mm max), Tmax 200°C*
T	PTFE	Estremamente tenero (non impiegabile se compressione > 80 N/mm), ottima resistenza chimica, Tmax 230°C *Extremely soft (no high load seals, 80 N/mm max), chemically inert, Tmax 230°C*
NO	Non placcato Unplated	Applicazioni dove il livello di tenuta richiesto non è elevato, temperatura secondo materiale base *Applications where no extreme leaktightness is required, Tmax depends on base material*

O-rings metallici

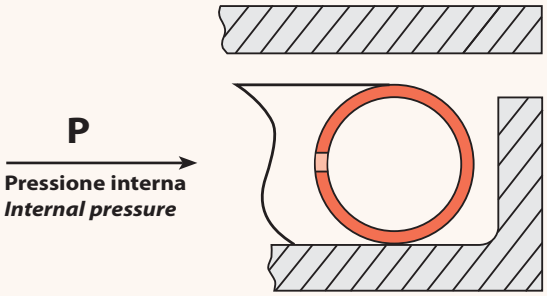

OI

Guarnizione estremamente versatile in grado di soddisfare la maggior parte delle esigenze e l'unica che consente forme costruttive anche non circolari.
Ad eccezione del tipo autoattivante, la guarnizione è identica sia che lavori con pressione interna che esterna.

Metal o-rings

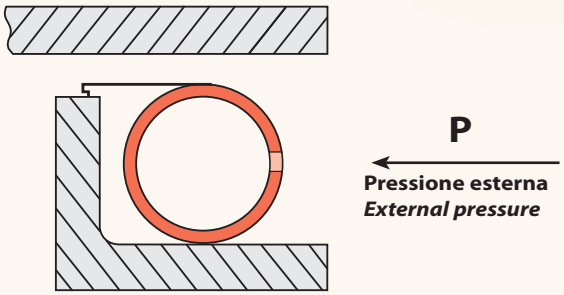

OE

Extremely versatile seal which can satisfy a wide range of applications and can also be produced in non-round configuration.
Excluding the self-energized type, this seal can work either with inside or outside pressure.

C-rings metallici

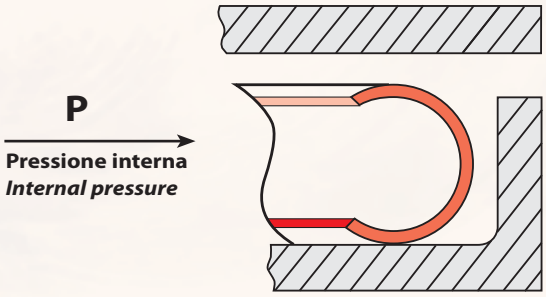

CI

Questa guarnizione, a parità di carico di serraggio, ha un ritorno elastico maggiore dell'O-ring metallico e consente una buona tenuta anche a bassa pressione, perché si autoattiva.
Non può sopportare pressioni molto elevate perché oltre un certo limite tende a chiudersi, inoltre la configurazione cambia a seconda se la pressione è interna o esterna.

Metal c-rings

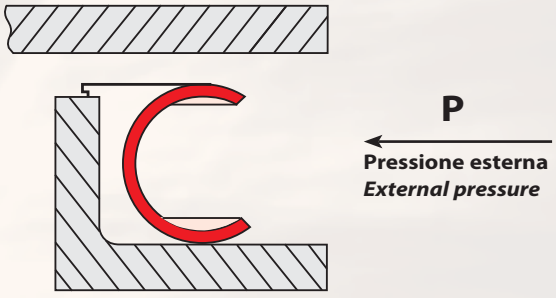

CE

This seal has the advantage of a bigger springback, with same load, and allows a good sealing also at low pressure, thanks to it self-energizing design.
Not suitable for very high pressure as over a certain value it closes and changes configurations according to inside/ outside pressure.

C-Rings metallici energizzati

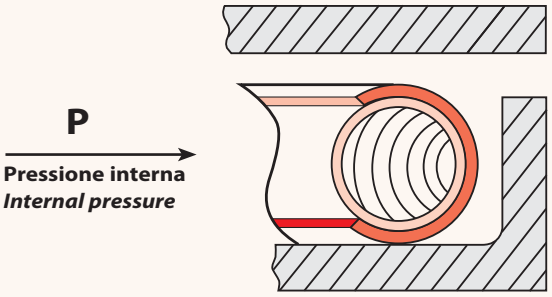

CSI

Guarnizione che offre grandi prestazioni in condizioni estreme, grazie alla parte esterna che mantiene l'elasticità di un C-ring ed alla molla interna che mantiene un contrasto con le forze di serraggio anche in condizioni limite.
Particolarmente apprezzate per impieghi criogenici, nell'alto ultra vuoto, nel settore nucleare con cicli termici ripetitivi

Spring metal C-Rings

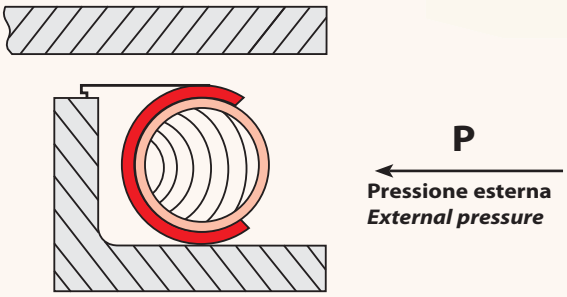

CSE

This seal offers high sealing efficiency in severe conditions with the C-shaped outer metal jacket which maintains the resilience and the spring which guarantees the resistance against the seating load also in extreme applications.
Particularly employed in cryogenics and ultra high vacuum applications, nuclear installations, with repeated thermal cycles.

O-Rings metallici autoattivati

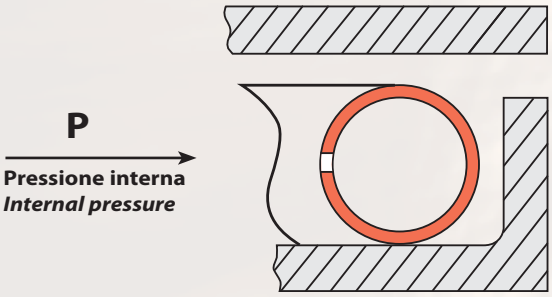

OVI

Questa guarnizione presenta una serie di forellini dal lato pressione, che consente di avere all'interno una pressione identica a quella da tenere, con il risultato di poter utilizzare spessori di parete del tubo più sottili, minori carichi di serraggio e nessun rischio di collassamento della guarnizione.

Vented metal O-Rings

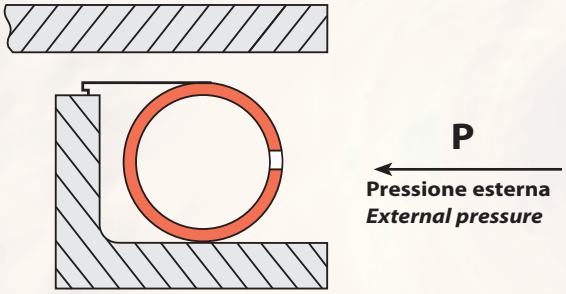

OVE

This seal has holes, on the pressure side, which allows an internal pressure same as the one to be sealed, so that thinner wall thickness of the tube can be used, with lower loads and no risk of seal break down.

O-rings metallici pressurizzati

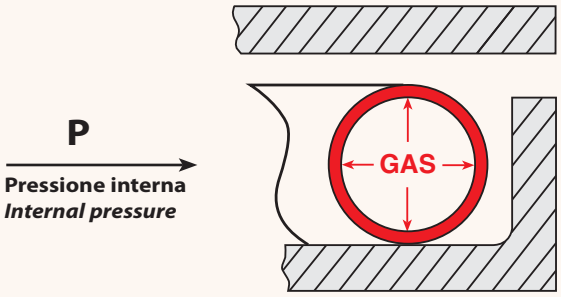

OGI

Si ricorre a questa versione quando non può essere utilizzata la versione autoattivata perché il fluido da tenere cambia il suo stato fisico durante il suo processo.
Esempio: le resine che passano dallo stato semiliquido a solido, causa la temperatura.
In questo caso in fase costruttiva della guarnizione viene iniettato un gel che all'aumento della temperatura passa allo stato di vapore con relativo aumento della pressione interna garantendo così lo stesso effetto dei tipi OVI e OVE (poiché il processo è reversibile non esistono neanche limitazioni sul numero dei cicli).

Pressure-filled metal o-rings

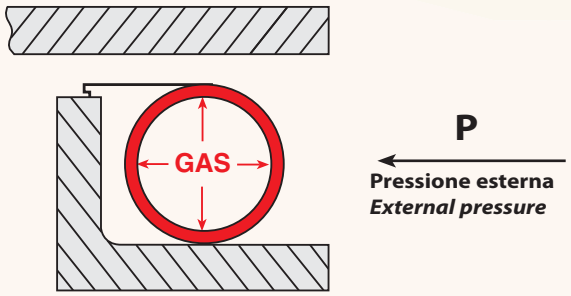

OGE

This type of seal to be employed instead of the vented ones in case the fluid to be sealed changes his physical condition during the process.
Example: resins which change from semi-liquid to solid state because of temperature.
In this case a gel, introduced in the seal, becomes vapour, because of the temperature, increases the inside pressure granting the same performance of types OVI and OVE (due to the reversible process there are no limits on cycles numbers).

Scelta della guarnizione

Non è sempre facile scegliere la guarnizione più appropriata, quasi sempre la scelta è frutto di un compromesso, per questo Vi invitiamo a rivolgerVi al nostro Ufficio Tecnico che potrà studiare con Voi la migliore soluzione per il Vs. problema.
Le guarnizioni metalliche vengono costruite su specifica richiesta del Cliente e possono avere varie forme.
La tabella C seguente, indica il raggio minimo esterno per le varie sezioni assiali.

Seal selection

The seal selection process is not easy and is very often a compromise so that we invite you to ask for the Technical Department in order to find the best solution to your problem.
Metal seals are produced under request and can be manufactured in different shapes.
The table C below, indicates the minimum outer corner radius for the various cross sections.

Tabella C

Table C

Sezione Assiale *Axial Section*	0,79	0,89	1,19	1,57	2,39	3,18	3,96	4,78	6,35	9,53	12,7	15,88
Raggio Minimo Esterno *Minimum Outer Radius*	3,2	3,2	5	6,5	13	25	50	75	100	200	300	400

Materiali di base utilizzati per la produzione delle guarnizioni.

Tabella D

Materiali
NICKEL ALLOY X-750
NICKEL ALLOY 718
321 SS
NICKEL ALLOY 600
304 SS
316 SS
HASTELLOY
302 SS

Basic materials used in the manufacture of the seals.

Table D

Materials
NICKEL ALLOY X-750
NICKEL ALLOY 718
321 SS
NICKEL ALLOY 600
304 SS
316 SS
HASTELLOY
302 SS

Per ordinare correttamente una guarnizione deve essere indicato:

1. Tipo
2. Dimensione cava
3. Sezione del tubo
4. Spessore parete del tubo
5. Materiali da definire secondo le condizioni di esercizio.
6. Rivestimento esterno del tubo (se necessario)
7. Trattamento termico finale (se necessario)

L'Ufficio Tecnico è a disposizione per la giusta soluzione al Vs. problema di tenuta.

To place correctly an order of a seal it shall be indicated the following:

1. *Type*
2. *Groove sizes*
3. *Tube cross-section*
4. *Tube wall thickness*
5. *Materials according to working conditions*
6. *Tube coating (if needed)*
7. *Final heat treatments (if needed)*

The Technical Department can give you assistance for the right solution of your sealing problem.

ANTIVIBRANTI
ANTIVIBRATION MOUNTS

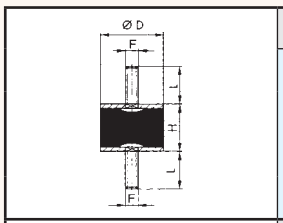

CILINDRICI - *CIRCULAR*

TIPO *TYPE*	RIF. - *REF.*	D	H	F	L
MM	MM 1510/4	15	10	M4	15
		FINO A - *UP TO*			
	MM 10060/16	100	60	M16	50

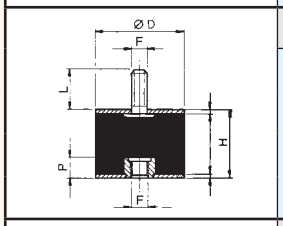

CILINDRICI - *CIRCULAR*

TIPO *TYPE*	RIF. - *REF.*	D	H	F	L	P
MF	MF 1510/4	15	15	M4	15	5
		FINO A - *UP TO*				
	MF 10080/16	100	80	M16	50	16

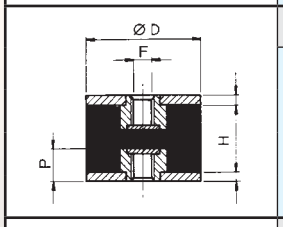

CILINDRICI - *CIRCULAR*

TIPO *TYPE*	RIF. - *REF.*	D	H	F	P
FF	FF 1510/4	15	15	M4	5
		FINO A - *UP TO*			
	FF 10080/16	100	80	M16	16

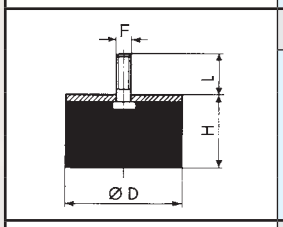

CILINDRICI - *CIRCULAR*

TIPO *TYPE*	RIF. - *REF.*	D	H	F	L
PM	PM 1510/4	15	10	M4	15
		FINO A - *UP TO*			
	PM 10050/16	100	50	M16	16

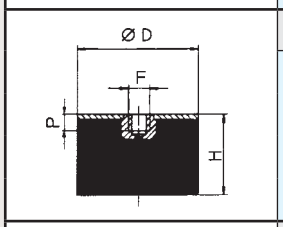

CILINDRICI - *CIRCULAR*

TIPO *TYPE*	RIF. - *REF.*	D	H	F	P
PF	PF 1515/6	15	15	M4	5
		FINO A - *UP TO*			
	PF 10050/16	100	50	M16	16

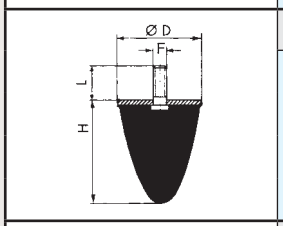

PARABOLICI - *PARABOLIC*

TIPO *TYPE*	RIF. - *REF.*	D	H	F	L
PMP	PMP 3015/6	30	15	M6	16
		FINO A - *UP TO*			
	PMP 10083	100	83	M16	50

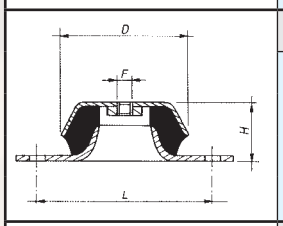

A CAMPANA CON FLANGIA - *CONICAL WITH FLANGES*

TIPO *TYPE*	D	F	L	H
Z	48	M8	68	23
	FINO A - *UP TO*			
	108	M16	160	50

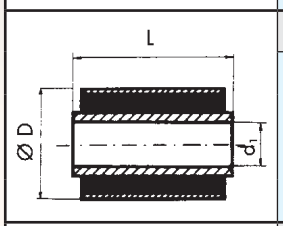

BUSSOLE - *BUSHES*

TIPO *TYPE*	D	d_1	L
BU	26	12	24
	FINO A - *UP TO*		
	75	40	70

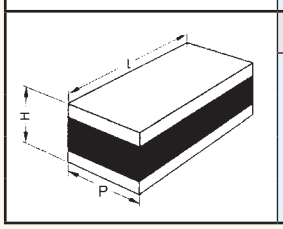

BARRE - *BARS*

TIPO *TYPE*	H	P	L
BZ	40	30	500/1000
	FINO A - *UP TO*		
	150	80	500/1000

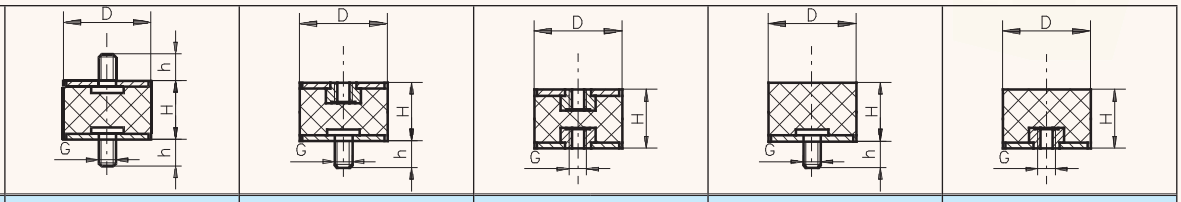

D	H	Type MM	Type MF	Type FF	Type PM	Type PF
6	7	M3xh*	M3xh*/M3	M3	M3xh*	M3
8	5	M3xh*			M3xh*	
8	8		M3xh*/M3	M3		M3
8	10					
9	12	M3xh* M4xh* M5xh*	M3xh*/M3 M4xh*/M4	M3 M4	M3xh* M4xh* M5xh*	M3 M4 M5
10	8	M3xh* M4xh* M5xh*	M3xh*/M3 M4xh*/M4	M3	M3xh* M4xh* M5xh*	M3 M4 M5
10	10			M3		
10	15		M3xh*/M3 M4xh*/M4 M5xh*/M5	M3 M4 M5		
10	17					
10	18					
10	30					
11	11	M3xh* M4xh* M5xh*	M3xh*/M3 M4xh*/M4	M3 M4	M3xh* M4xh* M5xh*	M3 M4 M5
12	10	M3xh* M4xh* M5xh*	M3xh*/M3 M4xh*/M4	M3	M3xh* M4xh* M5xh*	M3 M4 M5
13	26	M4xh* M5xh*	M4xh*/M4 M5xh*/M5 M6xh*/M6	M3 M4 M5	M4xh* M5xh* M6xh*	M3 M4
15	4				M4xh*	
15	5					
15	6	M4xh* M5xh*			M4xh* M5xh*	
15	7					
15	8		M4xh*/M4	M3		M3 M4
15	9					
15	10		M4xh*/M4 M5xh*/M5			
15	12			M3 M4		
15	13					
15	15			M3 M4 M5		M3 M4 M5
15	20					
15	25					
15	30					
16	18	M4xh* M5xh*	M4xh*/M4 M5xh*/M5	M3 M4 M5	M4xh* M5xh*	M3 M4 M5
20	5				M5xh*	
20	8	M5xh*			M6xh*	M5
20	10	M6xh* M8xh*	M5xh*/M5 M6xh*/M6		M8xh*	M6

G	h*
M3	4,6,10
M4	6,8,10
M5	10,12,15
M6	6,8,10,12,15,18,20,23,28
M8	8,10,12,15,18,20,23,25,28,33

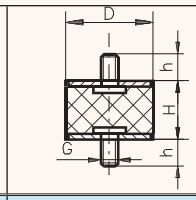

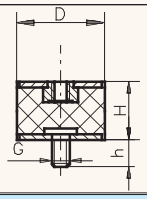

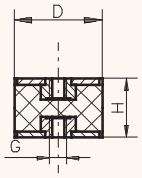

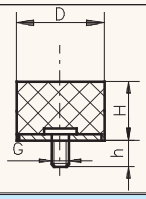

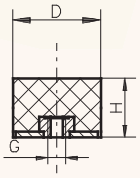

D	H	Type MM	Type MF	Type FF	Type PM	Type PF
20	11	M5xh* M6xh* M8xh*	M5xh*/M5 M6xh*/M6		M5xh*/M5 M6xh*/M6 M8h*/M8	M5 M6 M8
20	12					
20	13					
20	15		M5xh*/M5 M6xh*/M6 M8h*/M8	M5 M6		
20	17					
20	20			M5 M6 M8		
20	23					
20	25					
20	30					
25	8	M6xh*			M6xh* M8xh*	
25	10	M6xh* M8xh*				M6
25	12					M6 M8
25	13					
25	14					
25	15		M6xh*/M6 M8xh*/M8	M6		
25	17					
25	18					
25	19					
25	20			M6 M8		
25	22					
25	25					
25	27					
25	28					
25	30					
26	22	M6xh* M8xh*	M6xh*/M6 M8xh*/M8	M6 M8	M6xh* M8xh*	M6 M8
30	8				M6xh* M8xh M10xh	
30	10					M6
30	12					M6 M8
30	13					
30	15	M6xh* M8xh* M10xh*	M6xh*/M6 M8xh*/M8 M10xh*/M10	M6		M6 M8 M10
30	17					
30	18					
30	20			M6 M8		
30	22					
30	25			M6 M8 M10		
30	30					
30	35					
30	45					
30	40					
40	10	M6xh* M8xh* M10xh*			M6xh* M8xh* M10xh*	M6
40	15		M6xh*/M6 M8xh*/M8 M10xh/M10	M6 M6 M8		M6 M8 M10
40	20					
40	25					
40	27			M6 M8 M10		
40	28					
40	30					

G	h*mm.
M5	10,12,15
M6	6,8,10,12,15,18,20,23,28
M8	8,10,12,15,18,20,23,25,28,33
M10	10,12,15,18,20,23,25,28,33,38,43

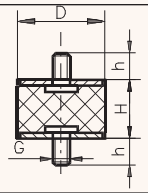

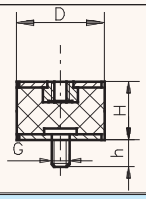

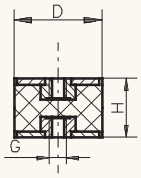

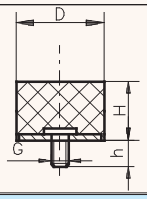

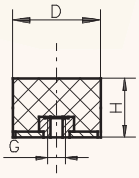

D	H	Type MM	Type MF	Type FF	Type PM	Type PF
40	35	M6xh*	M6xh*/M6	M6	M6xh*	M6
40	38	M8xh*	M8xh*/M8	M8	M8xh*	M8
40	40	M10xh*	M10xh*/M10	M10	M10xh*	M10
40	45					
40	60					
50	7				M8xh*	
50	9	M8xh*			M10xh*	
50	12				M8xh*	M8
50	15	M8xh*			M10xh*	
50	17	M10xh*			M12xh*	M8
50	20	M12xh*	M8xh*/M8	M8		M10
50	21		M10xh*/M10			M12
50	25		M12xh*/M12	M8		
50	27			M10		
50	28					
50	30			M8		
50	35			M10		
50	37			M12		
50	40					
50	42					
50	45					
50	50					
50	80					
60	15	M8xh*			M8xh*	M8
60	16	M10xh*			M10xh*	M10
60	20			M8	M12xh*	M8
60	25	M8xh*	M8xh*/M8	M8		M10
		M10xh*	M10xh*/M10	M10		M12
60	30	M12xh*	M8xh*/M8	M8		
60	35		M10xh*/M10	M10		
60	40		M12xh*/M12	M12		
60	45					
60	50					
60	60					
65	35	M12xh*	M12xh*/M12	M12	M12xh*	M12
70	20				M10xh*	M10
70	25	M10xh*		M10	M12xh*	M12
70	30	M10xh*	M10xh*/M10	M10		
70	35	M12xh*	M12xh*/M12	M12		
70	40					
70	45					
70	50					
70	53					
70	55					
70	60					
70	70					

G	h*mm.
M 6	6,8,10,12,15,18,20,23,28
M 8	8,10,12,15,18,20,23,25,28,33
M10	10,12,15,18,20,23,25,28,33,38,43
M12	10,12,18,20,23,25,27,33,37,42

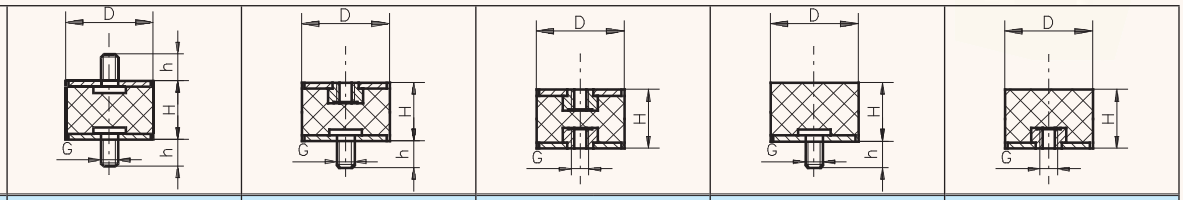

D	H	Type MM	Type MF	Type FF	Type PM	Type PF
75	20				M10xh* M12xh*	M10 M12
75	25	M10xh* M12xh*	M10xh*/M10 M12xh*/M12	M10 M12		
75	30					
75	35					
75	40					
75	45					
75	50					
75	55					
75	60					
75	70					
75	100					
100	25	M12xh* M16xh*			M12xh* M16xh*	
100	30					M12 M16
100	35			M12 M16		
100	40		M12xh*/M12 M16xh*/M16			
100	45					
100	50					
100	55					
100	60					
100	65					
100	70					
100	75					
100	80					
100	100					
150	50	M16xh* M20xh*		M16 M20	M16xh* M20xh*	M16 M20
150	55		M16xh/M16 M20xh/M20			
150	60					
150	75					
200	100	M20xh*	M20xh*/M20	M20	M20xh*	M20

G	h*mm.
M10	10,12,15,18,20,23,25,28,33,38,43
M12	10,12,18,20,23,25,27,33,37,42
M16	26,36,41,46
M20	41,45

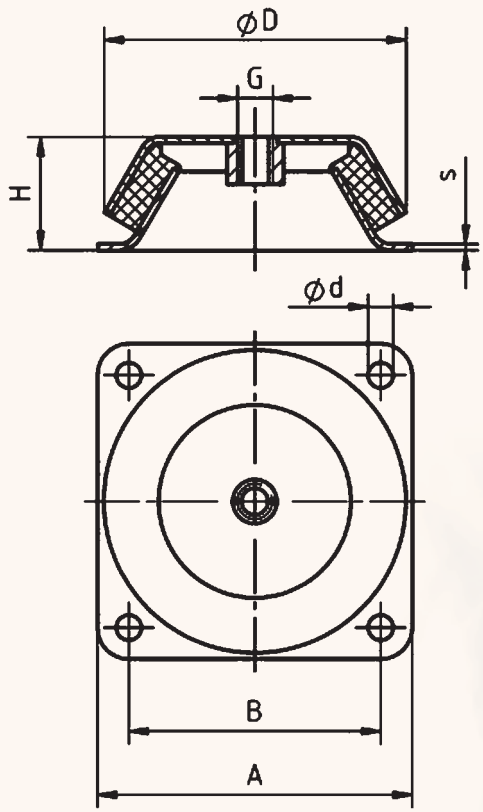

Z

D/H	D	H	A	B	S	G	d	Load (daN)
160/60	160	60	175	145	3	M 16	12,5	800
177/63	177	63	180	150	3	M 20	13	1400

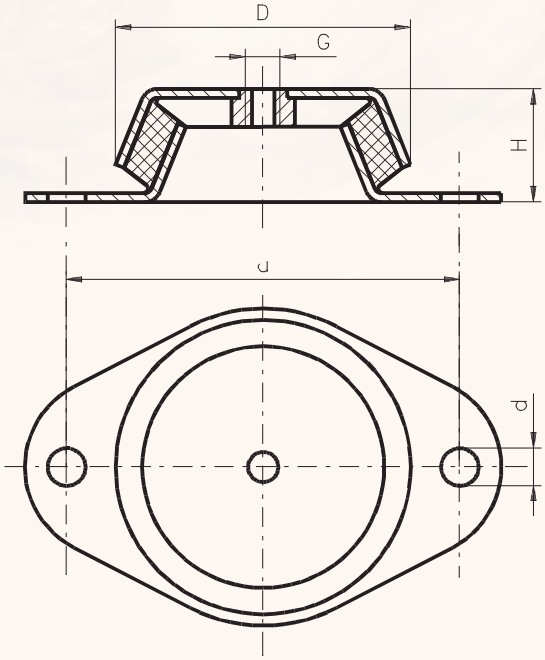

Z

D/H	D	H	a	d	G	Load (daN)
48/23	48	23	68	6,2	M8	100
62/30	62	30	85	8,2	M10	200
92/45	92	45	110	10,2	M12	300
101/38	101	38	175	14	M12	400
106/38	106	38	140	12,4	M12	400
160/60	160	60	200	16,2	M16	1000

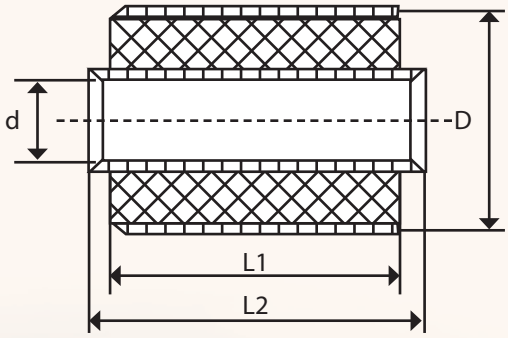

D	d	L1	L2
22	10	24	20
22	12	25	28
25	10	20	25
26	8,5	25	25
27	14	40	48
30	13	40	40
30	14	25	28
30	14	67	76
32	16	50	54
40	25	20	20
40	25	30	30
45	20	60	63
50	25	30	34
50	25	65	68
50	25	80	85
55	15,5	30	16
60	30	60	68
62	36	65	71
64	38	80	88

BADERNE
PACKINGS

Materiale:

Intrecciata diagonalmente ed é realizzata con filato di pura grafite flessibile espansa.

Material:

Diagonal braided construction of pure, expanded flexible graphite-tapes.

Proprietá:

Treccia molto flessibile e morbida, é una valida alternativa agli anelli preformati in grafite. Unisce i vantaggi degli anelli in pura grafite alla flessibilità, compressibilità e facilità d'installazione della treccia convenzionale; ha un bassissimo coefficiente d'attrito e un'alta conduttività termica; ha una lunga durata, non si indurisce; é chimicamente inerte (pH 0-14) ad eccezione con agenti fortemente ossidanti. Ha l'approvazione BAM per l'utilizzo con l'ossigeno.

Property:

Very flexible and supple packing, good alternative to preformed graphite-rings. Combines all the advantages of pure graphite rings with the flexibilty, compressibility and ease of installation of a conventional packing; very low coefficient of friction and high thermal conductivity; extended shelf life, does not harden; chemically inert (pH 0-14) except with highly oxidizing agents. BAM approved for oxygen applications.

Applicazioni:

È adatta per pompe rotative e valvole in centrali elettriche e caldaie, nell'industria petrolchimica e in molte altre aree industriali.
È indicata per vapore, acqua, carburanti, gas, prodotti chimici, olii minerali e sintetici, liquami. E' adatta per tutti i processi di lavorazione esclusi quelli dove sono presenti agenti fortemente ossidanti.

Applications:

Rotary pumps and valves in power stations and boiler houses, in the petrochemical industry and many other industrial areas.
Steam, water, fuel, gases, chemicals, mineral and synthetic oils, effluents. Suitable for all processes, except with highly oxidizing media.

Proprietà applicative *Application property*

Pressione rot. *Rotational pressure* bar	Pressione osc. *Assial pressure* bar	Pressione statica *Static pressure* bar	Velocità *Speed* m/sec	Temperatura *Temperature* °C	Valore *Value* pH	Densità *Density* g/cm³
25/35	**100/200**	**100/450**	**15/30**	**-240/+450** **Vapore/Steam** **+650**	**0/14**	**0,9/1,7**

Materiale:

Intrecciata con un nuovo esclusivo filato in PTFE espanso con particelle riempitive minerali altamente raffinate.

Material:

Is braided from a new type of proprietary yarn made from expanded PTFE with highly refined mineral filler particles.

Proprietá:

Treccia molto flessibile ad altissima densità. Facile e veloce da installare, richiede una manutenzione minima. Grazie alla malleabilità dell'esclusivo filato di cui è composta, le emissioni (perdite) possono essere facilmente regolate e ridotte a livelli minimi. Altissima resistenza chimica e bassissimo coefficiente d'attrito.
Conforme alle normative FDA, BAM, WRC. Le approvazioni possono prevedere diversi limiti applicativi da verificare nei rispettivi certificati.

Property:

Is a very supple packing with consistently high density and flexibility. Fast and simple to install, with minimum maintenance requirements. Because of the malleability of the unique yarn used for this packing, emissions (leakage) can be adjusted very finely and reduced to extremely low levels. Highest chemical resistance, very low coefficient of friction. FDA conformity, BAM approval, WRC approval.

Applicazioni:

Sebbene sia stata ideata come treccia per valvola, può essere impiegato per impianti a rotazione lenta come pompe centrifughe e alternative, pompe a ghigliottina, miscelatori, ecc.
L'insuperabile resistenza chimica del PTFE rende questa treccia adatta all'impiego con quasi tutti i mezzi, compresi quelli più aggressivi. Adatta per applicazioni alimentari e farmaceutiche, acqua potabile, solventi, oli, gas, effluenti, ecc.

Applications:

Although primarily designed as a valve packing, can also be used for slow moving rotating equipment like centrifugal pumps and reciprocating pumps, sliders, mixers, etc.
The unsurpassed chemical resistance of PTFE makes this packing ideal for nearly all - even the most aggressive - media. Also suitable for pharmaceutical and food applications, potable water, solvents, oils, gases, effluents, oxygen (BAM approved) etc.

Proprietà applicative *Application property*

Pressione rot. *Rotational pressure* bar	Pressione osc. *Assial pressure* bar	Pressione statica *Static pressure* bar	Velocità *Speed* m/sec	Temperatura *Temperature* °C	Valore *Value* pH	Densità *Density* g/cm³
10/20	**30/200**	**20/250**	**4/25**	**-200/+280**	**0/14**	**1,4/1,9**

Materiali:

Intrecciata diagonalmente e realizzata con filato di PTFE grafitato (PTFE con grafite incorporata), rinforzata sugli angoli con filato aramidico continuo, lubrificata con olio di silicone.

Materials:

Diagonally braided from PTFE-yarn (PTFE with incorporated graphite), reinforced at the corners with continuous Aramid yarn, lubricated with silicone oil.

Proprietá:

Treccia multi filato ad alte prestazioni, che unisce i vantaggi del compatto PTFE grafitato a quelli del tenace e duraturo filato aramidico. Il risultato é una ridotta usura degli alberi e una migliore conduttività termica rispetto alle trecce aramidiche standard.

Property:

Is a high performance multi-yarn packing, which combines the advantages of the supple PTFE material with those of tough and durable Aramid. This results in reduced shaft-wear and better thermal conductivity than standard Aramid packings.

Applicazioni:

E' una treccia polivalente, particolarmente adatta per l'utilizzo su pompe a pistone, miscelatori, agitatori, reattori, per valvole di processo industriale e chimico, ottima per applicazioni ad alte pressioni.
Può essere utilizzata a contatto con una vasta gamma di fluidi inclusi quelli abrasivi: acqua fredda e calda, vapore, solventi, olii, grassi, acidi e liscivie diluiti, acqua salata, acque di scarico, etc.

Applications:

Multi-purpose packing, particularly well suited for use in piston-pumps, mixers, stirrers, reactors, for industrial and chemical process valves, good for high pressure applications. Can be used with a wide variety of media including abrasive ones: cold and hot water, steam, solvents, oils, greases, diluted acids and lyes, brine, sewage etc.

Proprietà applicative *Application property*

Pressione rot. *Rotational pressure* bar	Pressione osc. *Assial pressure* bar	Pressione statica *Static pressure* bar	Velocità *Speed* m/sec	Temperatura *Temperature* °C	Valore *Value* pH	Densità *Density* g/cm³
30/35	**200/250**	**200/250**	**12/25**	**-100/+280**	**0/14**	**1,5/1,6**

Materiale:

Intrecciata diagonalmente e realizzata con filato aramidico continuo, impregnata con PTFE e olio siliconico per alte temperature.

Materials:

Diagonally braided from continuous Aramid fibres, impregnated with PTFE and high temperature silicone oil.

Proprietá:

La treccia, estremamente resistente e duratura, possiede una compatibilità chimica migliore di quella dell'amianto impregnato con PTFE e un'insuperabile resistenza meccanica del filato aramidico. L'impregnazione di PTFE e il lubrificante danno come risultato un basso coefficiente d'attrito e consentono velocità dell'albero fino a 20 m/sec. Tuttavia, a causa della tenacità della fibra aramidica, consigliamo una durezza dell'albero (bussola) >= 60 HRC.

Property:

Extremely tough and durable packing with a chemical compatibility better than PTFE-lubricated asbestos and the unsurpassed mechanical strength of Aramid. The impregnation with PTFE and lubricant results in a low coefficient of friction and allows shaft speeds up to 20 m/sec. However, due to the toughness of Aramid we recommend a shaft (sleeve) hardness > 60 HRC.

Applicazioni:

Sebbene sia stata progettata principalmente come treccia per pompe rotative, miscelatori e reattori nelle seguenti industrie: farmaceutiche, alimentari, chimiche e petrolchimiche, cartiere, zuccherifici, centrali elettriche, acciaierie e molte altre. Ideale anche come anelli anti estrusione in combinazione con trecce piu' morbide.
La resistenza chimica del filato aramidico unita all'impregnazione di PTFE consente l'utilizzo di questa treccia con la maggior parte dei prodotti chimici (ad eccezione di quelli molto corrosivi), acqua, vapore, olii, solventi, etc. mentre la sua notevole resistenza all'abrasione la rende ideale per l'utilizzo con sabbia abrasiva, fanghiglia e altri fluidi ghiaiosi.

Applications:

Although mainly designed as a rotary pump packing, mixers and reactors in the following industries: pulp and paper, pharmaceutical, food, sugar, chemical and petro-chemical, power stations, steel mills and many more. Also ideal as antiextrusion rings in combination with softer packings.
The chemical resistance of Aramid together with the PTFEimpregnation allows this packing to be used in connection with most chemicals (except very corrosive ones), water, steam, oils, solvents, etc., while its extrem abrasion resistance makes it ideal for use with abrasive sand, slurry and other gritty media.

Proprietà applicative *Application property*

Pressione rot. *Rotational pressure* bar	Pressione osc. *Assial pressure* bar	Pressione statica *Static pressure* bar	Velocità *Speed* m/sec	Temperatura *Temperature* °C	Valore *Value* pH	Densità *Density* g/cm³
20/35	**80/200**	**150/250**	**15/20**	**-100/+290**	**1/13**	**1,2/1,5**

Materiali:

Intrecciata diagonalmente e realizzata con filato di vetro testurizzato di alta qualità, impregnata filo per filo con grafite purissima in polvere e con inibitore di corrosione, oppure PTFE in dispersione e lubrificante di rodaggio esente silicone.

Materials:

Diagonally braided from high-quality textured glass fibre, impregnated yarn by yarn with pure graphite powder and a corrosion inhibitor. Other type impregnated throughout with PTFE-dispersion, silicone-free break-in lubricant.

Proprietá:

Il processo di grafitatura riduce l'usura delle fibre di vetro, evitandone il danneggiamento reciproco e l'abrasione sotto pressione.
E' una treccia molto compatta e flessibile con una buona resistenza chimica.

Property:

The graphiting process reduces fretting of the glass fibres, this prevents the glass fibres from abrading and damaging each other under pressure.
Very dense and supple packing, good chemical resistance.

Applicazioni:

Prevalentemente una treccia per valvole, ma é consigliata anche per passi d'uomo, coperchi di cisterne e per altre applicazioni statiche.
Acqua, olii, soluzioni alcaline, acidi deboli, prodotti chimici, etc.
Può essere utilizzata con acqua, vapore, solventi, olii, la maggior parte dei prodotti chimici, acidi e liscivie dolci, etc.

Applications:

Predominantly a valve packing, but can also be recommended for man holes, tank lids and other static applications.
Water, oils, alkaline solutions, weak acids, chemical products etc.
Can be used with water, steam, solvents, oils, most chemicals, mild acids and lyes, etc.

Proprietà applicative *Application property*

Pressione rot. *Rotational pressure* bar	Pressione osc. *Assial pressure* bar	Pressione statica *Static pressure* bar	Velocità *Speed* m/sec	Temperatura *Temperature* °C	Valore *Value* pH	Densità *Density* g/cm³
15	**20**	**150**	**8**	**-40/+550** **Vapore/Steam** **+200**	**4/11**	**1,5**

©Copyright OTP®

È vietata la riproduzione anche parziale del contenuto di questo Catalogo Tecnico. Non si possono accettare responsabilità per eventuali errori od omissioni. Le misure non sono impegnative.

The reproduction, even partial, of the contained concerning this Technical Catalogue, is forbidden. Liability for possible errors and/or omissions are not accepted. Sizes are not binding.

OTP®

COMPONENTI INDUSTRIALI

INDUSTRIALS COMPONENTS

1.4.11 ©Copyright

79800005000080000110