III. Linear ball bearings

MTK+ BEARINGS

Linear ball bushings

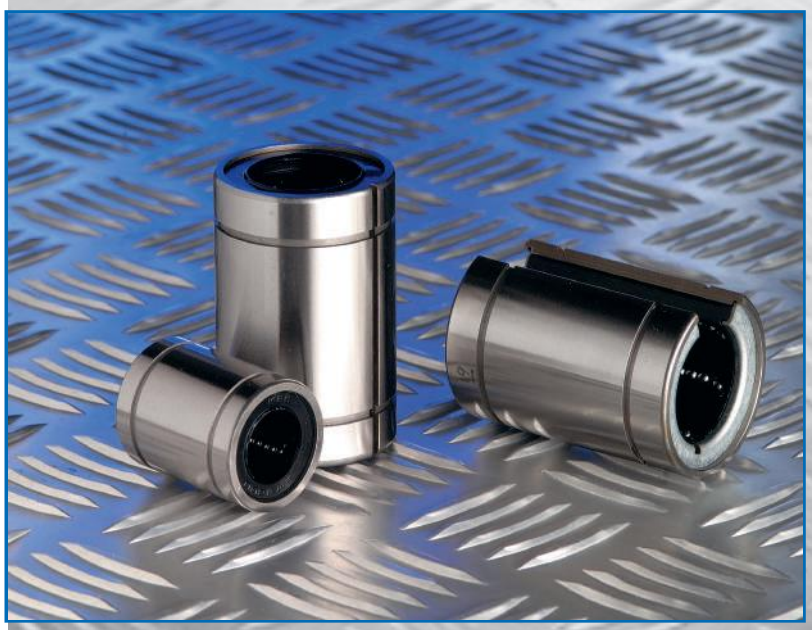

Linear ball bushings

Load rating

Basic dynamic load rating

This term is arrived at based on an evaluation of a number of identical linear systems individually run in the same conditions, if 90% of them can run with the load (with a constant value in a constant direction) for a distance of 50 km without damage caused by rolling fatigue. This is the basis of the rating.

Allowable static moment

This term defines the allowable limit value of static moment load, with reference to the amount of permanent deformation similar to that used for evalution of basic rated load (Co).

Static safety factor

This factor is used based on the application condition as shown in Table 1.

Basic static load rating

This term defines a static load such that, at the contacting position where the maximum stress is exercised , the sum of the permanent deformation of the rolling elements and that of the rolling plane is 0,0001 time of the diameter of the rolling elements.

Static safety factors

Table 1.

Condition of use	Low limit of fs
When the shaft has less deflection and shock	1 to 2
When elastic deformation should be considered whith respect to pinch load	2 to 4
When the equipment is subject to vibration and impacts	3 to 5

Rating Life

Rating life of the linear system

As long as linear system reciprocates while being loaded, continous stress acts on the linear system to couse flaking on the rolling bodies and planes because of material fatigue. The travelling distance of linear system until the fist flaking occurs is called the life of the system. The life of the dimensions, structure, material, heat treatment and processing method, when used in the same conditions. This variation is brought about from the essential variations in the material fatigue itself. The rating life defined bellow is used as an index for the life expectancy of the linear system.

Rating life

Rating life is the total travelling distance that 90% of a group of systems of the same size can reach without causing any flaking when they operate under the same conditions.

The rating life can be obtained from the following equation with the basic dynamic load rating and the load on the linear system:

For ball type:

$$L = \left(\frac{C}{P}\right)^3 50,$$

where:
L - rating life, km,
C - basic dynamic load rating N
P -load, N.

Consideration and influence of vibration impact loads and distribution of load should be taken into account when designing a linear motion system. It is difficult to calculate the actual load. The rating life is also affected by the operating temperature. In these conditions, the expression (1) is arranged as follows:

For ball type:

$$L = \left(\frac{f_H^3 \times f_T \times f_C}{f_W \times P}\right) \times 50,$$

where:

L -rating life, km,
f_H -hardness factor (see figure 1),
C -basic dynamic load rating, N,
f_T -temperatuer coefficient (see figure 2),
P -load, N,
f_c -contact coefficient (see table 2),
f_w -load coefficient (see table 3).

The rating life in hours can be calculated by obtaining the travelling distance per unit time. The rating life in hours can be obtained from the following expression when the stroke length and the number of strokes are constant:

$$L_h = \frac{L \times 10^3}{2\, l_s \times n_1 \times 60},$$

where:

L_h -rating life in hours, h_r,
l_s -stroke length, m,
L -rating life, km,
n_1 -no of strokes per minute, cpm.

Hardness factor

The shaft be sufficiently hardened when a linear bushing is used. If not properly hardened, permissible load is lowered and the life of the bushing will be shortened

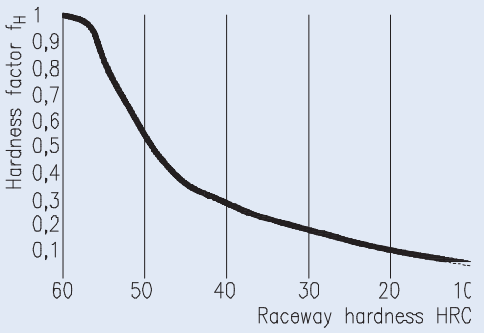

Fig. 1

Temperature coefficient

If the temperature of the linear system exceeds 100˚C, Hardness of the linear system and the shaft lowers to decresure the permissible load compared to that of the linear system used at room temperature rise shortens the rating life.

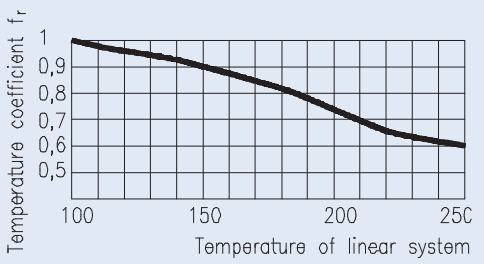

Fig. 2

Contact coefficient

Generally two or more linear bushings are used on one shaft. Thus, the load on each linear system differs depending on each precessing accuracy. Because the linear bushings are not loaded equally, the number of linear bushings per shaft changes the permissible load of system.

Contact coefficient

Table 2

Number of linear systems per shaft	Contact coefficient f_c
1	1,00
2	0,81
3	0,72
4	0,66
5	0,61

Load coefficient

When calculating the load on the linear system, it is necessary to accurately obtain object weight, inertial force based on motion speed, moment load, and each transition as time passes. However, it is difficult to calculate those values accurately because reciprocating motion involves the repetition of start and stop as well as vibration and impact. A more practical approach is to obtain the load coefficient by taking the actual operating conditions into account.

Load coefficient

Table 3

Operating Conditions	fw
Operation at low speed(15m/min. or less) without impulsive shock from outside	1,0 to 1,5
Operation at intermediate speed (60 m/min. or less) without impulsive shock	1,5 to 2,0
Operation at high speed (over 60 m/min.) With impulsive shock from outside	2,0 to 3,5

Frictional resistance

The static frictional resistance of the MTK linear system is so low as to be only slightly different from the kinetic frictional resistance, enabling smooth linear movement from low to high speeds. In general, the friction resistance is expressed by the following equation.

$$F = \mu W + f,$$

where:

F -frictional resistance,
μ -coefficient of friction,
W -load weight,
f -sealing resistance.

The frictional resistance of each MTK linear system depends on the model, load weight, speed, and lubricant. The sealing resistance depends on lip interference and lubricant, regardless of the load weigh. The sealing resistance of one linear system is about 200 to 500 gf. The coefficient of friction depends on the load weight, moment load, and preload. Table 6 shows the coefficient of kinetic friction of each type of linear system which has been instaled and lubricated properly and applied with normal load (P/C= 0,2)

Coefficient of linear system friction

Table 4

Linear System Type	Models	Coefficient of Friction
Linear Bushing	LM LME LMB	0,002 to 0,003

Ambient working temperature

The ambient working temperature range for each MTK linear system depends on the model. Consult MTK on use outside the recommended temperature range.

Temperature conversion equation:

$$C = \frac{5}{9}(F-32)$$

$$F = 32+\frac{9}{5}C$$

Ambient working temperature

Table 5

Linear System Type	Models	Ambient Working Temperature
Linear Bushing	LM LME LMB	-20 to 80˚C

Lubrication and dust prevention

Using MTK linear systems without lubrication increases the abrasion of the rolling elements, shortening the life span. The MTK linear systems, therefore require appropriate lubrication. For lubrication MTK recommends turbine oil conforming to ISO Standards G32 to G68 or lithium base soap grease no. 2. Some MTK linear systems are sealed to block dust out and seal lubricant in. If used in a harsh or corrosive enviroment, however, apply a protective cover to the part involving linear motion.

Structure and features

The MTK linear bushing consists of an outer cylinder, ball retainer, balls and two end rings. The ball retainer which holds the balls in the recirculating trucks inheld inside the outer cylinder by end rings.

Those parts are assembled to optimize their required functions.

The outer cylinder is maintained sufficient hardness by heat treatment, therefore if ensures the bushings projected travel life and satisfactory durability.

The ball retainer is made from synthetics to reduce running noise.

High precision and rigidity

The MTK linear bushing is reduced from a solid steel outer cylinder and incorporates an industrial strength resin retainer.

Ease of assembly

The standard type of MTK linear bushing can be loaded from any direction. Precision control is possible using only the shaft supporter, and the mounting surface can be machined easily.

Ease of replacement

MTK linear bushing of each type are completely interchangeable because of their standardized dimensions and strict precision control. Replacement because of wear or damage is therefore easy and accurate.

Variety of types

MTK offers a full line of linear bushing: The standard, integral single - retainer closed type, the clearance adjustable type and the open types. The user can choose from among these according to the application requirements to be met.

Linear ball bushing designation

Designation

Group I	Group II	Group III	Group IV
Type	Nominal shaft diameter	Modification	Seal

Example:
LM 25 UU AJ

Type:
LM -metric dimension series most widely used in Japan,
LME -metric dimension series generally used in Europe,
LMB -inch dimension series used mainly in USA.

Modification:
No entry -standard type,
AJ -adjustable type,
OP -open type.

Seal:

No entry	-no seal,
U	-seal on one side,
UU	-seals on both sides.

Tolerance

Note that precision of inscribed circle diameters and outside diameters for the clearance adjustable type (...-AJ) and the open type (...-OP) indicates the value obtained before the corresponding type is subjected to cutting process.

Load rating and life expectancy

The life of a linear bushing can be obtained from the following equation with the basic dynamic load rating and the load applied to the bush:

$$L = \left(\frac{f_H \times f_T \times f_C}{f_W \times P} \times \frac{C}{P} \right)^3 \times 50, \qquad (1)$$

where:

L	-ratedlife, km,
C	-basic dynamic load rating, N,
P	-working load, N,
fw	-load coefficient,
f_H	-hardness factor (see page 340),
f_T	-temperature coefficient (see page 340),
f_C	-contact coefficient (see page 340).

The lifespan of a linear bushing in hours can be obtained by calculating the travelling distance per unit time.

The lifespan can be obtained from the following equation if the stroke length and the number of strokes are constant:

$$L_h = \left(\frac{L \times 10^3}{2 \times l_s \times n_1 \times 60} \right), \qquad (2)$$

where:

L_h	-lifespan, hr,
l_S	-stroke length, m,
L	-rated life, km,
n_1	-number of strokes per minute, cpm.

Relation between ball circuits and load rating

The MTK linear bushing includes ball circuits that are spaced equally and circumferentially. The load rating varies according to the loaded position on the circumference.

The value in the dimension table indicates the load rating when the load is placed on top of one ball circuit. If the MTK linear bushing is used with two ball circuits loaded uniformly, the load rating will be greater. The following table shows the values by the number of ball circuits in such cases:

Tabel 6

Row position load ratio	Number of rows				
	3	4	5	6	8
Row position load ratio	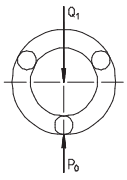 $Q_1 = P_0$	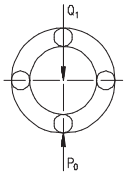 $Q_1 = P_0$	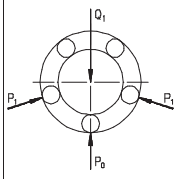 $Q1 = 1{,}106P_0$	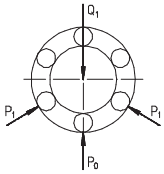 $Q1 = 1{,}354P_0$	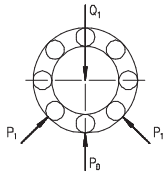 $Q1 = 1{,}841P_0$
Row position	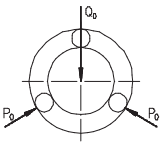 $Q_0 = P_0$	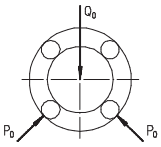 $Q0 = 1{,}414P_0$	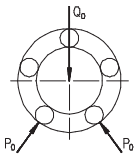 $Q0 = 1{,}618P_0$	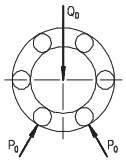 $Q0 = 1{,}732\ P_0$	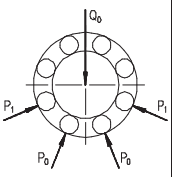 $Q0 = 2{,}052P_0$
Load ratio	$Q_0/Q_1 = 1$	$Q_0/Q_1 = 1{,}414$	$Q_0/Q_1 = 1{,}463$	$Q_0/Q_1 = 1{,}280$	$Q_0/Q_1 = 1{,}115$

Sample calculations

Obtaining the rated life and lifespan the MTK linear bushing used in the following conditions:

Linear bushing	LM20
Stroke length	50 mm
Number of strokes per minute	50 cpm
Load per bush	490 N

The basic dynamic load rating of the linear bushing is 882N from the dimension table. From equation (1) therefore, the rated life is obtained as follows:

$$L = \left(\frac{f_H \times f_T \times f_C}{f_W \times P} \times \frac{C}{P} \right)^3 \times 50 = \left(\frac{882}{490} \right)^3 \times 50 = 292\,\text{km},$$

where:
$F_H = f_T = f_C = f_W = 1.0$

From equation (2), the lifespan is obtained as followes:

$$L_h = \left(\frac{L \times 10^3}{2 \times e_s \times n_1 \times 60} \right) = \left(\frac{292 \times 10^3}{2 \times 0{,}05 \times 50 \times 60} \right) = 973\ \text{hr}$$

Selecting the linear bushing type satisfying the following conditions:

Number of linear bushing used	4
Stroke length	1 m
Traveling speed	10 m/min
Number of strokes per minute	5 cpm
Lifespan	10 hr
Total load	980 N

From equation (2), the travelling distance within the lifespan is obtained as follows

$$L = 2 \times l_s \times n_1 \times 60 \times L_h = 6\ 000\ \text{km}$$

From ecuation (1), the basic dynamic load rating is obtained as follows:

$$C = \sqrt[3]{\frac{L}{50}} \times \left(\frac{f_W}{f_H \times f_T \times f_C} \right) \times P = 1492\ \text{N}$$

Assume the following with a pair of shafts each with two linear bushings:

$f_C = 0{,}81,\ f_W = f_T = f_H = 1$

As a result, LM30 is selected from the dimension table as the MTK linear bushing type satisfying the value of C.

Clearance and fit

When a standard-type MTK linear bushing is used with a shaft, inadequate clearance, adjustment may cause early bush failure and/or poor, rough traveling. The clearence adjustable linear bush and open linear bush can be clearence adjusted when assembled in the housing which can control the outside cylinder diameter. However, too much clearance adjustment increases the deformation of the outside cylinder, to affect its precision and life. Therefore, the appropriate clearance between the bush and shaft, and clearance between the bush and housing are required according to the application. Table 7 shows recommended fit of the bush:

Table 7

Division / Model	Shaft Normal fit High class	Transi-tional	Housing Loose fit	Tight fit
LM	g6	h6	H7	J7
LMB				
LME	h6	j6	H7	J7

Note. The clearance may be zero or negative. Please attention the movement.

Shaft and housing

To optimize performance of the MTK linear bushing high precision of the shaft and housing is required.

Shaft

The rolling balls in the MTK linear bushing are in point contact with the shaft surface. Therefore,the shaft dimensions, tolerance, surface finish and hardness greatly affect the travelling performance of the bush. The shaft should be manufactered with due attention to the following points:

- Since the surface finish critically affects smooth rolling of balls, grind the shaft at 1,5 S or better.
- The best hardness of the shaft is HRC 60 to 64; Hardness less than HRC 60 decreases the life considerably, and hence reduces the permissible load. On the other hand, hardness over HRC 64 accelerates ball wear.
- The shaft diameter for the clearance adjustable linear bush and open linear bush should as much as possible be of the lower value of the inscribed circle diameter in the specification table. Do not set the shaft diameter to the upper value.
- Zero clearance or negative clearance increases the frictional resistance slightly. If the negative clearance is too tight, the deformation of the outside cylinder will become larger, to shorten the bush life.

Housing

There is a wide range of housings differing in design, machining and mounting. For the fitness and shapes of housings see in table 8 and the folowing section on mounting.

Mounting

When inserting the linear bush into the bushing do not hit the linear bush on the side ring holding the retainer but apply the cylinder circumference with a proper jig and push the linear bush into the housing by hand or lightly knock it in. In inserting the shaft after mounting the bush,

be careful not to shock the balls. Note that if two shafts are used in parallel, the parallelism is the most important factor to assure the smooth linear movement. Take care in setting the shafts.

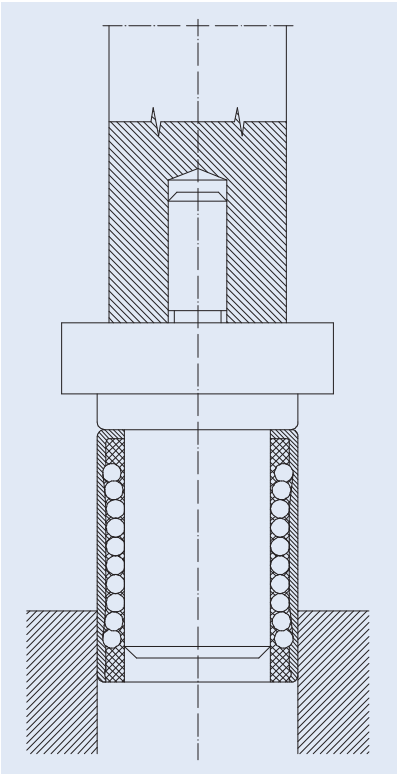

Exemples of mounting

The popular way to mount a linear bush is to operate it with an appropriate interference. It is recommended, however, to make a loose fit in principle because otherwise precision is apt to be minimized. The following examples show assembling of the inserted bush in terms of designing and mounting for reference.

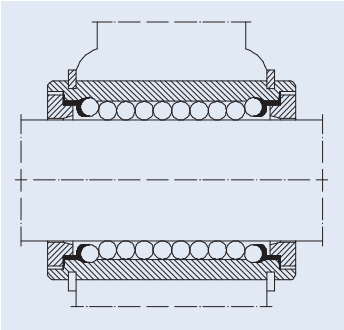

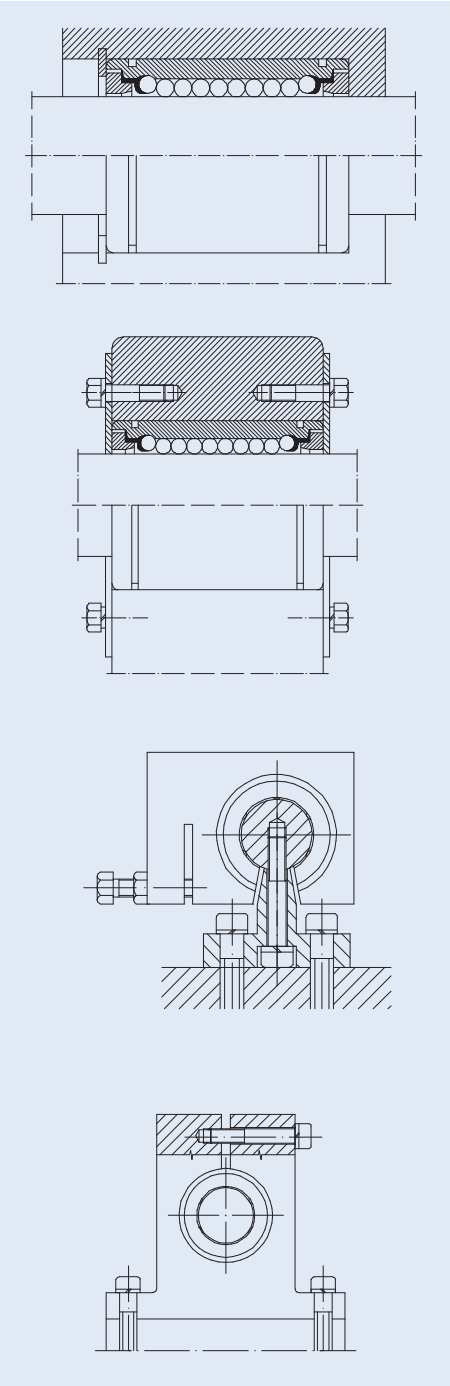

MTK ball bushing interchangeability list

Ball bushing compact type

MTK	NTN	STAR	INA	SKF	FAG
KH . . .	KH . . .	0658 - 0 . . .-00	KH . . .	LBBR . . . LBBS . . .	LNA . . . LFA
KH . . .PP	KH . . .LL	0658 - 2 . . .-40	KH . . .PP	LBBR . . .2LS LBBS . . .2LS	LNA . . .2RS LFA . . .2RS

Ball bushing resin retainer

MTK	NB	INA	SKF	THK	IKO	THOMSON	EASE
LME	KB...G	KB	LBAR / LBCR	LME...	LBE...	MA M...	SDE
LME...UU	KB...GUU	KB...PP	LBAR / LBCR ...2LS	LME...UU	LBE...UU	MA M...WW	SDE . . .UU
LME...AJ	KB...GAJ	KBS...	LBAS...	LME...AJ	LBE...AJ	MA M...ADJ	SDE . . .AJ
LME...UUAJ	KB...GUUAJ	KBS...PP	LBAS...2LS	LME...UUAJ	LBE...UUAJ	MA M...ADJ WW	SDE...UUAJ
LME...OP	KB...GOP	KBO...	LBAT / LBCT...	LME...OP	LBE...OP	MA M...OPN	SDE...OP
LME...UUOP	KB...GUUOP	KBO...PP	LBAT / LBCT...2LS	LME...UUOP	LBE...UUOP	MA M...OPN WW	SDE...UUOP

The above types are metric dimension series generally used in Europe.

MTK	NB	THK	EASE
LM...	SM...G	LM	SDM
LM...UU	SM...GUU	LM...UU	SDM...UU
LM...AJ	SM...GAJ	LM...AJ	SDM...AJ
LM...UUAJ	SM...GUUAJ	LM...UUAJN	SDM...UUAJ
LM...OP	SM...GOP	LM...OP	SDM...OP
LM...UUOP	SM...GUUOP	LM...UUOP	SDM...UUOP

The above types are metric dimension series generally used in Japan and other countries.

MTK	NB	THK	EASE
LMB...	SW...G	LMB	SDB
LMB...UU	SW...GUU	LMB...UU	SDB...UU
LMB...AJ	SW...GAJ	LMB...AJ	SDB...AJ
LMB...UUAJ	SW...GUUAJ	LMB...UUAJ	SDB...UUAJ
LMB...OP	SW...GOP	LMB...OP	SDB...OP
LMB...UUOP	SW...GUUOP	LMB...UUOP	SDB...UUOP

The above types are inch dimension series generally used in US.

Standard type 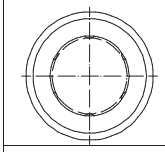	page 346 page 348 page 350	
Open type 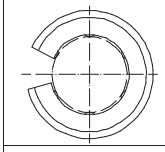	page 346 page 348 page 350	One ball circuit (50º - 80º) is removed to allow an opening slot to fit over rail supports.
Adjustable type 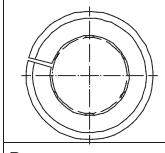	page 346 page 348 page 350	This type has a slot in the outside cylinder. This design allows for clearance adjustment.
Drawn cup type 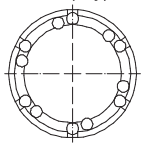	page 345	This type linear ball bushings consist of thin walled drawn cups, plastic cages and grade 10 steel balls. Bushings are available with seals at one or both ends.

Linear ball bushing

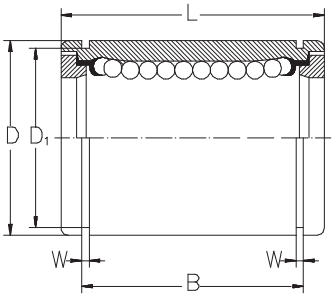

Nominal part no. Standard type	Seal type	Ball circuit	Weight	Adjustable type	Open type	Nominal shaft diameter Tolerance	
—	—		gr	—	—	mm	
LM 5	**LM 5UU**	4	4	—	—	5^{0}	-0,008
LM 6	**LM 6UU**	4	8	**LM 6 AJ**	—	6^{0}	-0,009
LM 8S	**LM 8SUU**	4	11	**LM 8S AJ**	—	8	
LM 8	**LM 8UU**	4	16	**LM 8 AJ**	—	8	
LM 10	**LM 10UU**	4	30	**LM 10 AJ**	—	10	
LM 12	**LM 12UU**	4	31,5	**LM 12 AJ**	**LM 12 OP**	12	
LM 13	**LM 13UU**	4	43	**LM 13 AJ**	**LM 13 OP**	13	
LM 16	**LM 16UU**	4	69	**LM 16 AJ**	**LM 16 OP**	16	
LM 20	**LM 20UU**	5	87	**LM 20 AJ**	**LM 20 OP**	20^{0}	-0,010
LM 25	**LM 25UU**	6	220	**LM 25 AJ**	**LM 25 OP**	25	
LM 30	**LM 30UU**	6	250	**LM 30 AJ**	**LM 30 OP**	30	
LM 35	**LM 35UU**	6	390	**LM 35 AJ**	**LM 35 OP**	35^{0}	-0,012
LM 40	**LM 40UU**	6	585	**LM 40 AJ**	**LM 40 OP**	40	
LM 50	**LM 50UU**	6	1580	**LM 50 AJ**	**LM 50 OP**	50	
LM 60	**LM 60UU**	6	2000	**LM 60 AJ**	**LM 60 OP**	60^{0}	-0,015

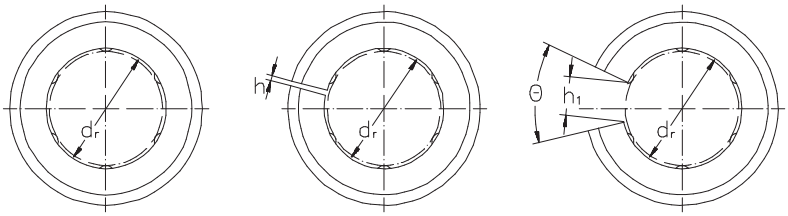

LM LM AJ LM OP

Major dimensions and tolerance D Tolerance	L Tolerance	B Tolerance	W	D1	H	h1		Eccen-tricity max	Radial clearance max	Basic Load C	Rating C_0	Nominal part no.
mm								μm		kN		
$10^{0}_{-0,009}$	$15^{0}_{-0,012}$	$10,2_{-0,2}$	1,1	9,6	—	—	—	8	-3	0,17	0,21	**LM 5**
$12^{0}_{-0,011}$	$19^{0}_{-0,02}$	$13,5_{-0,2}$	1,1	11,5	1	—	—	12	-5	0,21	0,27	**LM 6**
$15^{0}_{-0,011}$	$17^{0}_{-0,02}$	$11,5_{-0,2}$	1,1	14,3	1	—	—	12	-5	0,18	0,23	**LM 8S**
$15^{0}_{-0,011}$	$24^{0}_{-0,02}$	$17,5_{-0,2}$	1,1	14,3	1	—	—	12	-5	0,27	0,41	**LM 8**
$19^{0}_{-0,013}$	$29^{0}_{-0,02}$	$22_{-0,2}$	1,3	18	1			12	-5	0,38	0,56	**LM 10**
$21^{0}_{-0,013}$	$30^{0}_{-0,02}$	$23_{-0,2}$	1,3	20	1,5	8	80°	12	-5	0,42	0,61	**LM 12**
$23^{0}_{-0,013}$	$32^{0}_{-0,02}$	$23_{-0,2}$	1,3	22	1,5	9	80°	12	-7	0,52	0,79	**LM 13**
$28^{0}_{-0,013}$	$37^{0}_{-0,02}$	$26,5_{-0,2}$	1,6	27	1,5	11	80°	12	-7	0,79	1,2	**LM 16**
$32^{0}_{-0,016}$	$42^{0}_{-0,02}$	$30,5_{-0,2}$	1,6	30,5	1,5	11	60°	15	-9	0,88	1,4	**LM 20**
$40^{0}_{-0,016}$	$59^{0}_{-0,03}$	$41_{-0,3}$	1,85	38	2	12	50°	15	-9	1	1,6	**LM 25**
$45^{0}_{-0,016}$	$64^{0}_{-0,03}$	$44,5_{-0,3}$	1,85	43	2,5	15	50°	15	-9	1,6	2,8	**LM 30**
$52^{0}_{-0,019}$	$70^{0}_{-0,03}$	$49,5_{-0,3}$	2,1	49	2,5	17	50°	20	-13	1,7	3,2	**LM 35**
$60^{0}_{-0,019}$	$80^{0}_{-0,03}$	$60,5_{-0,3}$	2,1	57	3	20	50°	20	-13	2,2	4,1	**LM 40**
$70^{0}_{-0,022}$	$100^{0}_{-0,03}$	$74_{-0,3}$	2,6	76,5	3	25	50°	20	-13	3,9	8,1	**LM 50**
$80^{0}_{-0,022}$	$110^{0}_{-0,03}$	$85_{-0,3}$	3,15	86,5	3	30	50°	25	-16	4,8	10,2	**LM 60**

LM<Built- in synthetics resin retainer>
This type is a metric dimension series widely used in Japan and other countries

Linear ball bushing

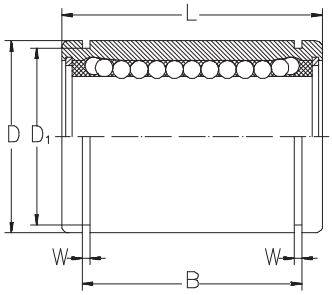

Nominal part no. Standard type	Seal type	Ball circuit	Weight	Adjustable type	Open type	Nominal shaft diameter Tolerance
—	—		gr	—	—	mm
LME 5	**LME 5UU**	3	11	**LME 5 AJ**	—	5 $^{+0,008}_{0}$
LME 8	**LME 8UU**	4	20	**LME 8 AJ**	—	8
LME 12	**LME 12UU**	4	41	**LME 12 AJ**	**LME 12 OP**	12
LME 16	**LME 16UU**	4	57	**LME 16 AJ**	**LME 16 OP**	16 $^{+0,009}_{-0,001}$
LME 20	**LME 20UU**	5	91	**LME 20 AJ**	**LME 20 OP**	20
LME 25	**LME 25UU**	6	215	**LME 25 AJ**	**LME 25 OP**	25 $^{+0,011}_{-0,001}$
LME 30	**LME 30UU**	6	325	**LME 30 AJ**	**LM E 30 OP**	30
LME 40	**LME 40UU**	6	705	**LME 40 AJ**	**LME 40 OP**	40 $^{+0,013}_{-0,002}$
LME 50	**LME 50UU**	6	1130	**LME 50 AJ**	**LM E 50 OP**	50
LME 60	**LME 60UU**	6	2220	**LME 60 AJ**	**LM E 60 OP**	60

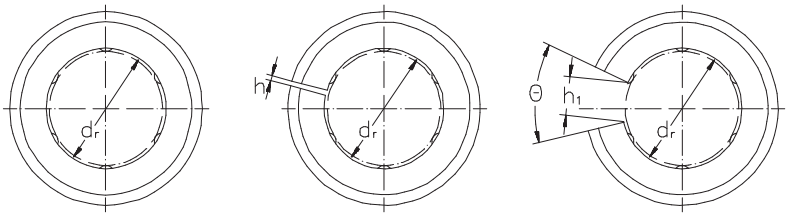

LME LME AJ LME OP

Major dimensions and tolerance

D Tolerance	L Tolerance	B Tolerance	W	D1	H	h1		Eccen-tricity max	Radial clearance max	Basic load C	Rating C_0	Nominal part no.
mm								μm		kgF		
$12^{0}_{-0,008}$	$22^{0}_{-0,02}$	$14,5_{-0,2}$	1,1	11,5	1	—	—	12	-5	21	27	**LME 5**
$16^{0}_{-0,008}$	$25^{0}_{-0,02}$	$16,5_{-0,2}$	1,1	15,2	1	—	—	12	-5	21	41	**LME 8**
$22^{0}_{-0,009}$	$32^{0}_{-0,02}$	$22,9_{-0,2}$	1,3	21	1,5	7,5	78°	12	-7	52	79	**LME 12**
$26^{0}_{-0,009}$	$36^{0}_{-0,02}$	$24,9_{-0,2}$	1,3	24,9	1,5	10	78°	12	-7	59	91	**LME 16**
$32^{0}_{-0,011}$	$45^{0}_{-0,02}$	$31,5_{-0,2}$	1,6	30,3	2	10	60°	15	-9	88	140	**LME 20**
$40^{0}_{-0,011}$	$58^{0}_{-0,03}$	$44,1_{-0,3}$	1,85	37,5	2	12,5	60°	15	-9	100	160	**LME 25**
$47^{0}_{-0,011}$	$68^{0}_{-0,03}$	$52,1_{-0,3}$	1,85	44,5	2	12,5	50°	15	-9	160	280	**LME 30**
$62^{0}_{-0,013}$	$80^{0}_{-0,03}$	$60,6_{-0,3}$	2,15	59	3	16,8	50°	17	-13	220	410	**LME 40**
$75^{0}_{-0,013}$	$100^{0}_{-0,03}$	$77,6_{-0,3}$	2,65	72	3	21	50°	17	-13	390	810	**LME 50**
$90^{0}_{-0,015}$	$125^{0}_{-0,04}$	$101,7_{-0,4}$	3,15	86,5	3	27,2	54°	20	-16	480	1020	**LME 60**

LME<Built- in synthetics resin retainer>
This type is a metric dimension series generally used in Europe.

Linear ball bushing

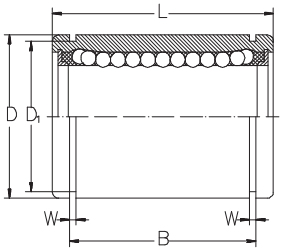

Nominal diameter	Nominal part number						Nominal shaft diameter		Major dimensions and tolerance	
	Standard type	Seal type	Ball circuit	Weight	Adjustable type	Open type		Tolerance	D	Tolerance
inch/mm				kg			inch/mm			
1/4 6,350	**LMB 4**	**LMB 4UU**	4	0,008	**LMB 4 AJ**	—	0,250 6,350	0 -0,0040	0,5000 12,700	0 -0,00045 0 -0,011
3/8 9,525	**LMB 6**	**LMB 6UU**	4	0,014	**LMB 6 AJ**	—	0,3750 9,525		0,6250 15,875	0 -0,00050
1/2 12,700	**LMB 8**	**LMB 8UU**	4	0,037	**LMB 8 AJ**	**LMB 8 OP**	0,5000 12,700	0 -0,0090	0,8750 22,225	0 -0,013
5/8 15,875	**LMB 10**	**LMB 10UU**	4	0,076	**LMB 10 AJ**	**LMB 10 OP**	0,625 15,875		1,1250 28,575	
3/4 19,050	**LMB 12**	**LMB 12UU**	5	0,095	**LMB 12 AJ**	**LMB 12 OP**	0,7500 19,050	0 -0,0040	1,2500 31,750	0 -0,00065
1 25,400	**LMB 16**	**LMB 16UU**	6	0,200	**LMB 16 AJ**	**LMB 16 OP**	1,0000 25,400		1,5625 39,688	
1-1/4 31,750	**LMB 20**	**LMB 20UU**	6	0,440	**LMB 20 AJ**	**LMB 20 OP**	1,2500 31,750	0 -0,0050	2,0000 50,800	0 -0,00075
1-1/2 38,000	**LMB 24**	**LMB 24UU**	6	0,670	**LMB 24 AJ**	**LMB 24 OP**	1,5000 38,100		2,3750 60,325	0 -0,019
2 50,800	**LMB 32**	**LMB 32UU**	6	0,114	**LMB 32 AJ**	**LMB 32 OP**	2,0000 50,800	0 -0,010	3,0000 76,200	0 -0,00090 0 -0,022

LM<Built- in synthetics Resin Retainer>
This type is a metric dimension series widely used in Japan and other countries

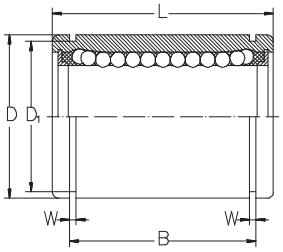

L	Tolerance	B	Tolerance	W	D_1	h	h_1		Eccen-tricity max	Radial clearance max	Basic load rating C	C_0	Nominal part no.
inch/mm											N		
0,7500 19,050	0 -0,008	0,5110 12,98	0 -0,008	0,390 0,992	0,4687 11,906	0,04 1	—	—	0,0005 12	-0,0001 -3	206	265	**LMB 4**
	0 -0,200		0 -0,200										
0,8750 22,225		0,6358 16,15		0,390 0,992	0,5880 14,935	0,04 1	—	—	0,0005 12	-0,0001 -3	225	314	**LMB 6**
1,2500 31,750		0,9625 24,46		0,0459 1,168	0,8209 20,853	0,06 1,5	0,34 7,9375	80˚	0,0005 12	-0,0001 -4	510	764	**LMB 8**
1,5000 38,100		1,1039 28,04		0,0559 1,422	1,0590 26,899	0,06 1,5	0,375 9,525	80˚	0,0005 12	-0,0001 -4	774	1180	**LMB 10**
1,6250 41,275		1,1657 29,61		0,0559 1,422	1,1760 29,870	0,06 1,5	0,4375 11,1125	60˚	0,0006 15	-0,0002 -6	862	1370	**LMB 12**
2,2500 57,150	0 -0,012	1,7547 44,57	0 -0,012	0,0679 1,727	1,4687 37,306	0,06 1,5	0,5625 14,2875	50˚	0,0006 15	-0,0002 -6	980	1570	**LMB 16**
2,6250 66,675	0 -0,300	2,0047 50,92	0 -0,300	0,0679 1,727	1,8859 47,904	0,10 2,5	0,625 15,875	50˚	0,0008 20	-0,0003 -8	1570	2740	**LMB 20**
3,0000 76,200		2,4118 61,26		0,0859 2,184	2,2389 56,870	0,12 3	0,75 19,05	50˚	0,0008 20	-0,0003 -8	2180	4020	**LMB 24**
4,0000 101,600		3,1917 81,07		0,1029 2,616	2,8379 72,085	0,12 3	1,0 25,40	50˚	0,0010 25	-0,0005 -13	3820	7940	**LMB 32**
	0 -0,022												

Standard linear ball bushing
Steel drawn cup/cage plastic

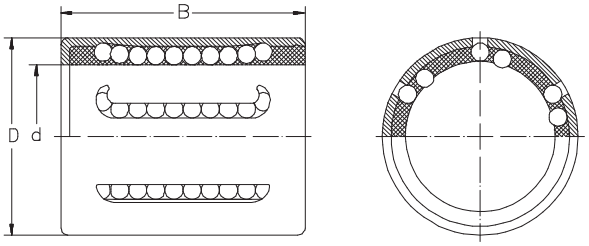

Dimensions d	D	B	Load capacity dyn.	stat.	Designation	Weight
mm			N		—	g
6	12	22	400	239	**KH 0622**	7
8	15	24	435	280	**KH 0824**	12
10	17	26	500	370	**KH 1026**	14,5
12	19	28	620	510	**KH 1228**	18,5
14	21	28	620	520	**KH 1428**	20,5
16	24	30	800	620	**KH 1630**	27,5
20	28	30	950	790	**KH 2030**	32,5
25	35	40	1990	1670	**KH 2540**	66
30	40	50	2800	2700	**KH 3050**	95
40	52	60	4400	4450	**KH 4060**	182
50	62	70	5500	6300	**KH 5070**	252

IV. Pillow blocks

MTK+ BEARINGS

Pillow blocks

Pillow blocks

Feature

The spherical outside surface ball bearings of MTK are deep groove ball bearings with wide and narrow inner rings, consisting of insert bearings (SA200, SB200, UC200, UEL200, UK200, UCX00 and UC300) and various housings. The types of bearing units are defined according to the different mounting methods of the bearings to shafts : the set-screws type, the adapter type, the accentric locking collar type.

The MTK housings are mainly casting housings. There are pressed steel plate housings as well align with ease during operation and can be conveniently mounted or dismounted.

The bearing units can operate satisfactorily under working conditions, especially for machines operating in dusty or muddy surroundings. Thus, they are widely used in agricultural, construction and transmission machineries, etc.

There are various types of sealing devices for our products, such as synthetic rubber seals, slinger with synthetic rubber seals and triple lip seals etc..

Sufficient lubricating grease has been put into the bearings during manufacturing, which can act as lubricating as well as rust proof. No more grease is needed to put in during the lubricating period when the bearings operate under normal conditions. Lubricating grease can be added from the fittings when the rebubricate bearings operate under hard conditions.

The outer ring of the bearing, has spherical outside surface which can be fitted to the concave spherical surface of the housing, and the fit between them can be clearance fit or interference fit according to different conditions. This combination provides self-alignment between the self-contained bearing and the housing, and compensates for a certain alignment errors or flexing of the shaft when the bearing is in operation. This definitely increases the bearing service life

Lubrication

The Spherical Outside Surface Ball Bearings of MTK generally use CG-2 rust proof lithium based lubricating grease, with physical chemical properties shown in the following table 1. Grease is filled in the spherical outside surface ball bearings during manufacturing.

Physical chemical properties of lubricating grease

Table 1

Density 1/mm	Without operation	268
	Operated 60 times	260
Dropping point ˚C		128
Mechanical impurities pc/gr	10-25 µm	within 1000
	25-75 µm	within 500
	above 75 µm	0
Base oil kinematical viscosity 40˚ cst		80,3

The bearings usually operate below the temperature of 120˚C (the measuring temperature of the outer rings is 100˚C). Grease life reduction has to be taken into account when the bearing continues to operate at a temperature above 70˚C. The lowest operating temperature should not be lower than -30˚C.

The permissible speed of rotations is connected with the fit between shaft and bearing. It is recommended that, under normal operating conditions,the fit between the bearing and the shaft is h7. Looser fit allowing lower speed is recommended when heavier load is applied.

Tolerance for bearing units

Tolerances on inner rings of bearing with cylindrical bore
Unit: 0.001 mm

Table 2

Nominal bore diameter d over	incl.	**Cylindrical bore** bore diameter dm deviations high	low	d deviations high	low	width Bi deviations high	low	**Radial run-out** max.
mm								
10	18	+18	0	+22	-4	0	-120	12
18	30	+21	0	+25	-4	0	-120	15
30	50	+25	0	+30	-5	0	-120	18
50	80	+30	0	+36	-6	0	-150	22
80	120	+35	0	+42	-7	0	-200	28
120	150	+40	0	+48	-8	0	-250	35

Note: dm is defined as the arithmetical mean of the largest and smallest diameter obtained by two-point measurements.

Tolerances on inner rings of bearings with tapered bore
Unit: 0.001 mm

Table 3

Nominal bore diameter d over	incl.	**Δd** deviations high	low	**Δd1-Δd** max.	min.
mm					
18	30	+33	0	+21	0
30	50	+39	0	+25	0
50	80	+46	0	+30	0
80	120	+54	0	+35	0
120	150	+63	0	+40	0

Note: The deviations from nominal taper are defined by the limits of (Δd1-Δd), where (Δd1 is actual deviations of d1 from nominal diameter at the largest end of bore and Δd is actual deviation of d from bearing bore nominal diameter.

d1 is obtained by the following formula: d1= d+ 0.083333 B, where B is width of the bearing inner ring.

The nominal taper angle = 2°23'9,4".

Please refer to the figures 1.

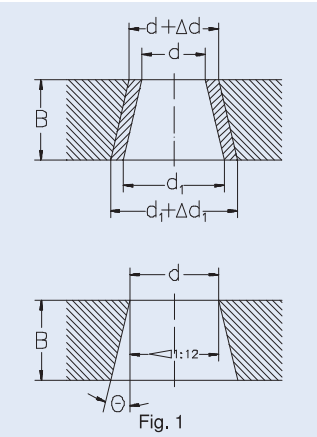

Fig. 1

Tolerances on outer ring
Unit: 0.001 mm

Table 4

Nominal bore diameter D over	incl.	**Dm** deviations high	low	**Radial run-out** max.
mm				
40	50	0	-11	20
50	80	0	-13	25
80	120	0	-15	35
120	150	0	-18	40
150	160	0	-25	45

Note: Dm is defined as the arithmetical means of the largest and the smallest diameter obtained by two-point measurement.

The low deviation of outside diameter Dm does not apply within the distance of 1/4 the width of outer ring from the sides.

Tolerance for distance 'h'' between the radial plane passing through center of outer ring and a side of inner ring
Unit: 0.001 mm

Table 5

Nominal bore diameter d over	incl.	**n** deviations
mm		
40	50	± 200
50	80	± 250
80	120	± 300
120	160	± 350

Please refer to figure 2.

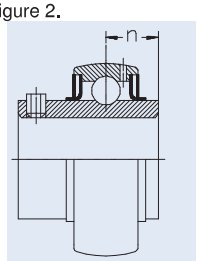

Fig. 2

Chamfer dimensions

Table 6

Nominal dimensions r mm	r max.	r min.
1	1.5	0.6
1.5	2	1
2	2.5	1.5
2.5	3	2
3	3.5	2.5
3.5	4	3
4	4.5	3.5
5	6	4

Please refer to fig. 3.

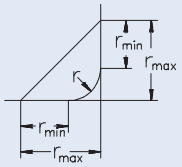

Fig. 3

Center height tolerances for pillow block type housings

Please refer to below figures 4 and table7

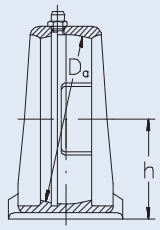

Fig. 4

Tolerances for flanged type housings (F, FS, FL, FT, FA, FB, FC)

Please refer below figures 5a, 5b and table 8a, 8b.

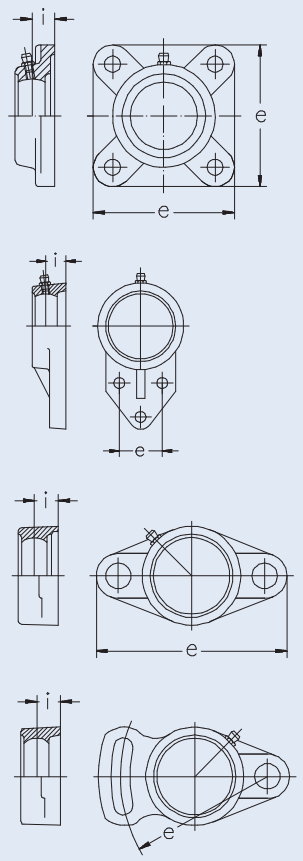

Fig. 5a

Tolerances for flanged type housings (F, FS, FL, FT, FA, FB,)

Center height tolerances for pillow block type housings

Unit: 0.001 mm

Table 7

Housing number						h deviations
			AK204			
P203			AK205	PA203		
P204			AK206	PA204	PH204	
P205		P305	AK207	PA205	PH205	
P206	PX05	P306	AK208	PA206	PH206	± 150
P207	PX06	P307	AK209	PA207	PH207	
P208	PX07	P308	AK210	PA208	PH208	
P209	PX08	P309	AK211	PA209	PH209	
P210	PX09	P310	AK212	PA210	PH210	
P211	PX10	P311	AK213	PA211	PH211	
P212	PX11	P312	AK214	PA212	PH212	
P213	PX12	P313	AK215	PA213	PH213	
P214	PX13	P314			PH214	
P215	PX14	P315			PH215	± 200
P216	PX15	P316			PH216	
P217	PX16					
P218						

Unit: 0.001 mm

Table 8a

Housing number								e deviations	i deviations
F204		FL204		FT204	FS204	FA204	FB204		
F205	F305	FL205	FL305	FT205	FS205	FA205	FB205		
F206	F306	FL206	FL306	FT206	FS206	FA206	FB206		
F207	F307	FL207	FL307	FT207	FS207	FA207	FB207	± 700	± 500
F208	F308	FL208	FL308	FT208	FS208	FA208	FB208		
F209	F309	FL209	FL309	FT209	FS209	FA209	FB209		
F210	F310	FL210	FL310	FT210	FS210	FA210	FB210		
F211	F311	FL211	FL311	FT211	FS211	FA211	FB211		
F212	F312	FL212	FL312	FT212	FS212	FA212	FB212		
F213	F313	FL213	FL313	FT213	FS213	FA213	FB213		
F214	F314	FL214	FL314	FT214	FS214				
F215	F315	FL215	FL315		FS215			± 1000	± 800
F216		FL216							
F217		FL217							
F218		FL218							

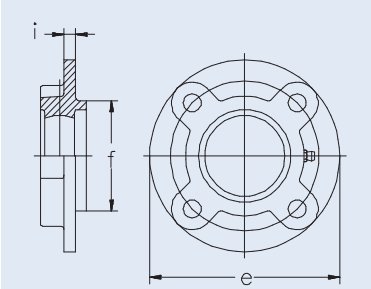

Fig. 5b

Tolerance for flanged type housing (FC)

Unit: 0,001 mm

Table 8b

Housing number	f deviations high	f deviations low	e deviations	i deviations	Radial run-out of machined pilot max
FC 204					
FC 205	0	-46			
FC 206					
FC 207			± 700	± 500	200
FC 208					
FC 209	0	-54			
FC 210					
FC 211					
FC 212					
FC 213					
FC 214					
FC 215	0	-63	± 1000	± 800	300
FC 216					
FC 217					
FC 218	0	-72			

Tolerance for take-up type housing (T,ST)

Please refer to below figure 6 and table 9a, 9b.

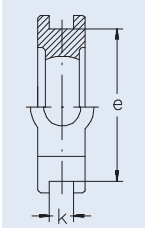

Fig. 6

Tolerance for take-up type housing (T)

Unit: 0,001mm

Table 9a

Housing number	k deviations high	k deviations low	e deviations	Parallelism of guide max.
T204	+200	0	0	500
T210	0		– 500	
T211	+300	0		600
T217	0		– 800	

Tolerance for take-up type housing (ST)

Unit:0.001mm

Table 9b

Housing number	k deviations	e deviations	Parallelism o guide max.
ST204	+500	± 250	500
ST210	– 250		
ST211	+1000	± 250	600
ST215	– 250		

Tolerance on spherical inside diameter
Unit: 0,001mm

Table 10

Nominal spherical inside diameter Da		**Symbol H7**		**Symbol J7**					
over	incl.	Dam deviations high	deviations low	Da deviations high	deviations low	Dam high	low	Da high	low
mm									
30	50	+25	0	+30	-5	+14	-11	+19	-16
50	80	+30	0	+36	-6	+18	-12	+24	-18
80	120	+35	0	+42	-7	+22	-13	+29	-20
120	180	+40	0	+48	-8	+26	-14	+34	-22
180	250	+46	0	+55	-9	+30	-16	+39	-25

Note: Dam = (Da max + Da min) / 2
Da max - maximum measured value of Da
Da min - minimum measured value of Da
Dimensional tolerances for spherical inside diameter of housing are classified as H7 for clearance fit and J7 for interference fit.
As the self - contained for bearings are equipped with locking-pin, clearance fit H7 is normally applied.

Machining tolerances

Table 11

Nominal dimension over	incl.	**Dimensional** tolerance
mm		
4	16	± 0,2
16	63	± 0,3
63	250	± 0,5

Casting tolerances on length

Table 12

Nominal dimension over	incl.	**Dimensional tolerance**
mm		
up	100	± 1,5
100	200	± 2,0
200	400	± 3,0
400	800	± 4,0

Casting tolerances on thickness

Table 13

Nominal dimension over	incl.	**Dimensional tolerance**
mm		
up	5	± 1
5	10	± 1,5
10	20	± 2
20	30	± 3
30	50	± 3,5

One side machining tolerances

Table 14

Nominal dimension over	incl.	**Dimensional tolerance**
mm		
up	5	± 1
5	100	± 1,5
100	200	± 2
200	400	± 3

Note: Dimensional tolerances and deviations are for ordinary grade;.
Dimensional tolerances on length and thickness may be added with deviations on draft taper.

Radial internal clearance of bearings

The radial internal clearance of the bearing for the unit is the same as the value of ISO 5753, the internal radial clearance for the spherical outside surface ball bearing is usually greater than that for the same size of deep groove ball bearing. The clearance for the cylindrical bore bearing is shown in table 15 while the clearance for the tapered bore bearing is shown in table 16.

Radial internal clearance of cylindrical bore bearings (with set-screws and eccentric locking collar)
Unit: 0,001mm

Table 15

Nominal bore diameter d		**Clearance symbol**					
over	incl.	C2		normal		C3	
mm		min.	max.	min.	max.	min.	max.
10	18	3	18	10	25	18	33
18	24	5	20	12	28	20	36
24	30	5	20	12	28	23	41
30	40	6	20	13	33	28	46
40	50	6	23	14	36	30	51
50	65	8	28	18	43	38	61
65	80	10	30	20	51	46	71
80	100	12	36	24	58	53	84
100	120	15	41	28	66	61	97
120	140	18	48	33	88	71	114

Radial internal clearance of tapered bore bearings (with adapter sleeve)
Unit: 0,001mm

Table 16

Nominal bore diameter d		**Clearance symbol**					
over	incl.	C2		normal		c3	
mm		min.	max.	min.	max.	min.	max.
10	18	10	25	18	33	25	45
18	24	12	28	20	36	28	48
24	30	12	28	23	43	30	61
30	40	13	33	28	46	40	64
40	50	14	36	30	51	45	73
50	65	18	43	38	61	55	90
65	80	20	51	46	71	65	105
80	100	24	58	53	84	75	120
100	120	28	66	61	97	90	140
120	140	33	81	71	114	150	160

Bearing Size selection

The bearing size is usually selected according to the required life and reliability under a specific type of load charged on the spherical outside surface ball bearing

The load applied to the bearing operating under static or slow oscillating and rotating (n<10r/min) condition is defined as static load, while the load applied to the bearing operating under a speedy rotating (n>10r/min) condition is defined as dynamic load.

The load capacity of the bearing is expressed by the basic dynamic load rating which is shown in the spherical outside surface ball bearing's table.

Under normal mounting, lubricating and maintaining conditions, the operating bearing will have fatigue flaking due to the repeating action of variable load charged on the contact area between the rings and rolling elements. Generally, the fatigue flaking is the cause of normal damage of rolling bearings. Therefore, the usual bearing life refers to the bearing fatigue life. The life of group of apparently identical bearings operating under a considerable dispersion. For this reason, the bearing life is closely connected with the damaging probability or the reliability requirement.

The radial rating load of ball bearing with 90% reliability and 500 hours minimum life is shown in figure 7.

Life: The life of a rolling bearing is defined as the total number of revolution which the bearing is capable of enduring before the first evidence of fatigue flaking develops on any one rings or rolling elements.

Reliability: The reliability is the percentage of the bearings of a group of apparently identical bearings operating under identical conditions which can expect to attain or exceed a certain defined life. The raliability of individual bearings is the probability of the bearing to attain or exceed a defined life.

Basic rating life: For a group of apparently identical rolling bearings operating under identical

conditions, the basic rating life is defined as the total number of revolutions that 90% of the bearings can be expected to complete or exceed.

Basic rating life

The fatigue rating life of spherical outside surface ball bearings is calculated by the following formula:

$$L_{10} = \left(\frac{C}{P}\right)^3, \text{ or } \frac{C}{P} = L_{10}^{1/3}$$

where:

L_{10} -basic rating life, 10^6r
P - basic dynamic load rating, N
N - equivalent dynamic bearing load, N

The basic dynamic load rating C is a hypothetical constant load with a fixed direction under which the bearing can attain a basic life of one milion revolutions theoretically. For radial bearings, the load refers to the radial load.

The equivalent dynamic bearing load P is a constant load with a fixed direction under which the bearing life is identical to that of the bearing operating under actual load.

For a bearing operating with a constant rotation speed,the basic rating life can be expressed in terms of operating hours:

$$L_{10h} = \frac{10^6}{60n}\left(\frac{C}{P}\right)^3 \text{ or } L_{10h} = \frac{10^6}{60n} L_{10h} = \frac{16666}{n}\left(\frac{C}{P}\right)^3,$$

where:

L_{10h} - basic rating life, h
n - bearing operating speed of rotation, r/min

For easier calculation, 500 hours as base of rating life is taken, and the speed factor fn and the life factor f_h is introduced.

$$f_n = \left(\frac{33^{1/3}}{n}\right) \quad ,f_h = \left(\frac{L_{10h}}{500}\right)^{1/3}$$

In this, the formula is simplified to:

$$C = \frac{f_h}{f_n} P,$$

The values of f_h and f_n can be found in figure 7 by referring to the operation speed n and the anticipated bearing service life L10h. Then, with the radial load (or the equivalent dynamic bearing load), the basic dynamic load rating can be determined. By this way, the bearing size can be determined according to the basic dynamic load rating value in the spherical outside surface ball bearing's table.If the bearing operate under indeterminate loads and rotation speed, the following formula should be applied when calculating the bearing life:

$$P_m = \sqrt[3]{\frac{1}{N}\int_0^N P^3 dN}$$

where:

P_m - mean equivalent dynamic bearing load, N
P - equivalent dynamic bearing load, N
N - total revolution numbers within one load changing cycle, r

Fig. 7

Anticipated bearing service life

When selecting a bearing, one should usually predetermine an appropriate service life according to the relevant machine type, operating condition and reliability requirement. Generally the anticipated bearing service life can be determined by refering to the maintenance period of a machine.

Calculating method of equivalent dynamic bearing load P.

The basic equivalent dynamic bearing load is determined under a hypothetical condition.When calculating the bearing life, the actual load has to be converted to dynamic bearing load which is in conformity with the load condition determining the dynamic load rating. General equation for calculating the equivalent dynamic bearing load:

$$P = XF_r + YF_a,$$

where:

P - equivalent dynamic bearing load, N
F_r - actual radial load, N
F_a - actual axial load, N
X - radial factor
Y - thrust factor

The values of X and Y are determined by the ratio between the applied axial load F_a and the basic static load rating Co. The axial load which the spherical outside surface ball bearing can carry is determined by the mounting method of the bearing on the shaft.

For bearing of set-screw Locking type or eccentric Locking collar type, if flexible shafts are applied and the set-screws are tightened enough, the axial load Fa which the bearings can carry not surpass 20% of the radial load Fr.

For bearing of adapter sleeve Locking type, if the nut is properly tightened, the axial load F_a can be maximally 15% to 20% of the radial load.

The value of radial and thrust factors X and Y for spherical outside surface ball bearings can be obtained from the following Table 17.

When twist load is applied to the bearing, the equivalent dynamic bearing load is calculated by the following equation:

$$P_m = f_m P$$

where:

P_m - equvalent dynamic bearing load when considering twist load

f_m - twist load factor, which is defined as follows:
- when the twist load is small: fm = 1,5
- when the twist load is big: fm = 2

Example of bearing size selection

When shocking load is applied to the bearing, the equivalent dynamic bearing load can be calcuted by the following equation:

$$P_d = f_d P$$

where:

P_d - equivalent dynamic bearing load when considerating shocking load

f_d - shocking load factor, which is defined as follows:
- when no shocking load or mirror shocking load is applied: f_d = 1-1,2
- when adequate shocking load is applied: f_d = 1,2-1,8

How to select the size of bearing:

one spherical outside surface ball bearings is to operate at a rotation speed of 1000r/min under only a radial load of Fr = 3000N, with a basic rating life of at least 20,000 hours.

Select the bearing size.

From the required rotation speed it can be found that: f_n = 0,322 (figure 7 shows about 0,32, refer to page 357).

From the required basic rating life (anticipated service life), it can be found that:

f_h = 3,42 (figure 7 shows about 3,4, refer to page 357).

Under only radial load, i.e.

P = Fr = 3000 N

Therefore,

$$C = \frac{f_h}{f_n} P = \frac{3,42}{0,322} = 31,863 \text{ N}$$

A simplified way to calculate the bearing life can be applied by using figure 8.

Fig. 8

Radial and thrust factors X and Y for spherical outside suface ball bearings

Table 17

	Clearance for normal					Clearance for C3				
$\frac{F_a}{C_a}$	$\frac{F_a}{F_r} \le e$		$\frac{F_a}{F_r} > e$		e	$\frac{F_a}{F_r} \le$	e	$\frac{F_a}{F_r} > e$		e
	X	Y	X	Y		X	Y	X	Y	
0,025	1	0	0,56	2	0,22	1	0	0,46	1,74	0,3
0,04	1	0	0,56	1,8	0,24	1	0	0,46	1,61	0,33
0,07	1	0	0,56	1,6	0,27	1	0	0,46	1,46	0,36
0,13	1	0	0,56	1,4	0,31	1	0	0,46	1,3	0,41
0,25	1	‘0	0,56	1,2	0,37	1	0	0,46	1,14	0,47
0,5	1	0	0,56	1	0,44	1	0	0,46	1	0,54

By connecting n and the required basic rating life L_{10h} with a straight line, it can be found that C/P value is 10,6. As is known, $P = F_r = 3000N$, thus the required basic dynamic load rating is:

$C = 3000 \times 10,6 = 31,800$, N

In this way, we can select the spherical outside surface ball bearings inside this catalogue (refer to pages 116-127).

Adjusted rating life equation

The basic rating life L_{10} calculated with bearing life calculation formula can be applied to calculate the rating life of bearings made of ordinary bearing steel (i.e.bearing life with reliability of 90%)

Due to more and more of machinery products demanding higher reliability and better quality steel (ISO 281/1-1977), an adjusted rating life calculation equation is suggested, i.e.

$$L_n = a1\ a2\ a3\ L_{10}$$

For spherical outside surface ball bearing:

$$L_n = a1\ a2\ a3\ (C/P)^3$$

where

Ln	under specified material and lubricating conditions, bearing life with (100-n)% no breaking probality (i.e.reability).
a1	life adjustment factor for reability (table 18)
a2	life adjustment factor materials (table 19)
a3	life adjustment factor for operating conditions (table 20)

Life adjustment factor for reability a_1

Table 18

Reability %	90	95	96	97	98	99
Ln	L_{10}	L5	L4	L3	L2	L1
a1	1	0,62	0,53	0,44	0,33	0,21

Life adjustment factor for materials a_2

Table 19

Normal chromium bearing steel		a2 = 1
Special smelted bearing steel	Vacuum degassed bearing steel	a2 = 3
	vacuum resmelted bearing steel	a2 = 5
When material hardness lowered by high frequency tempering		a2<1

Life adjustment factor for operating conditions a_3

Table 20

When under normal operating conditions: -properly mounted -sufficiently lubricated -without outside matters intrustion	a3 = 1
When under operating temperature, the spherical outside suface ball bearings lubricating grease viscosity lower than 13 mm^2/s	a3<1

Selection of shaft

The shaft on which bearing units are mounted shall be free from band and flexure.

For the units with cylindrical bore (with set-screws or eccentric locking collar) clearance fit is usually adopted for mounting the units on the shaft, and shaft tolerances in table 21 are recommended for such loose fit, but for high speed or highly accurate operation or such application which is accompanied by heavy shock loads, interference fit is to be adopted. Table 22 shows recommended shaft tolerances for interference fit, when bearing units with eccentric locking collar are mounted on the shaft with interference fit, the eccentric locking collar may omitted.

Tapered bore bearings permit wider tolerances of the shaft since they are locked to the shaft by means of adapted sleeves.

Recommended shaft tolerances for tapered bore bearings listed in table 23.

Shaft tolerances for clearance fit for bearing with cylindrical bore

Table 21

Shaft diameter		Deviation of tolerances in saft For lower speed		For medium speed		For rather high speed		For high speed	
over	incl.	h9		h8		h7		J6	
mm		max.	min.	max.	min.	max.	min.	max.	min.
10	18	0	-43	0	-27	0	-18	+8	-3
18	30	0	-52	0	-33	0	-21	+9	-4
30	50	0	-62	0	-39	0	-25	+11	-5
50	80	0	-74	0	-46	0	-30	+12	-7
80	120	0	-87	0	-54	0	-35	+13	-9
120	180	0	-100	0	-63	0	-40	+14	-11

Shaft tolerance for interference fit for bearing with cylindrical bore

Table 22

Shaft diameter over	incl.	Deviation of tolerances in shaft Higher speed m6		Rather heavy load m7		Highest load m6		Heavy load m7	
mm		max.	min.	max.	min.	max.	min.	max.	min.
10	18	+18	+7	+25	+7	+23	+12	+30	+ 12
18	30	+21	+8	+29	+8	+28	+15	+36	+15
30	50	+25	+9	+34	+9	+33	+17	+42	+17
50	80	+30	+11	+41	+11	+39	+20	+50	+20
80	120	+35	+13	+48	+13	+45	+23	+58	+23
120	180	+40	+15	+55	+15	+52	+27	+67	+27

Shaft tolerances for bearing with tapered bore

Table 23

Shaft diameter over	incl.	Deviation of tolerances in shaft For shot shaft h9		For shot shaft h10	
mm		max.	min.	max.	min.
10	18	0	-43	0	-70
18	30	0	-52	0	-84
30	50	0	-62	0	-100
50	80	0	-74	0	-120
80	120	0	-87	0	-140
120	180	0	-100	0	-160

Mounting of bearing units on shaft

The bearing units can be easily installed in principle at any place.However, in order to have a long service life, it is desirable that the mounting base if flat and rigid.

In case of either the vibration is caused to the bearing, the alternating movement takes place, the load applied to the bearing is large, or the shaft rotation speed is rapid, it is desired to provide with the filed seat or concave section at the part where the set-screws contact with the shaft. If large thrust load is charged, it is recommended that joggling tightened with nuts be used to install the bearing most effectively to the shaft: as shown in figure 9.

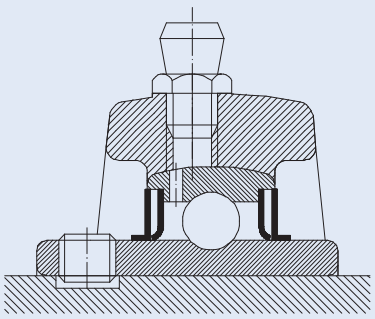

Fig. 9

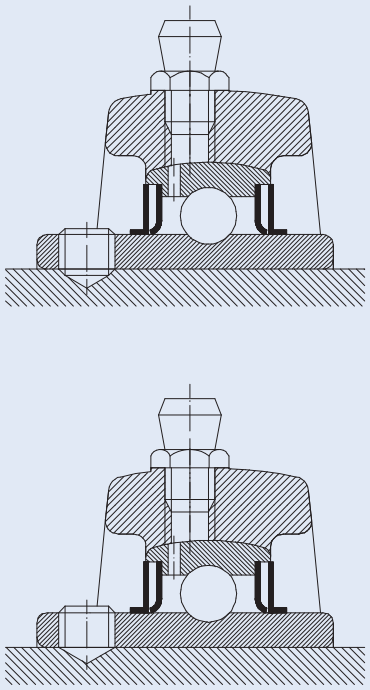

Fig. 9 (continued)

Bearings units with adapter sleeve

Bearing unit with adapter sleeve permits wider shaft tolerance and can be used in applications where vibrations and shocks are heavy.

Mounting processes of these units as follows:

First, the sleeve is instaled to an arbitrary position. After the shark proof washer is inserted, the nut is tightened. The proper nut tightening condition can be obtained if it

is tightened enough by hand and then rotated by 2/5 to 3/5 revolution with a spanner.

After tightening the nut, bend the shark proof washer within the slot. Otherwise, the nut may be loosened and creep may be caused between the shaft and sleeve. It is necessary the nut can not be tightened too much.

Bearings units with eccentric locking collar

The eccentric part of the collar mates with the inner ring of the bearing which is made eccentric with the collar. When locked to the shaft by hand in direction of the shaft rotation, the eccentric locking collar tightens automatically to the shaft by force of working radial load. Then, lock the set-screws provided on the collar to fix the eccentric collar to the shaft. At the shaft rotation force or load is not charged on the set-screws directly, it will not loosen during operation.

Bearings units with set-screws

There are two set- screws located at two places on one side of the wide inner ring 120 apart with which the bearing units can be mounted to the shaft. When mounting the bearing to the shaft, the torque shown in the following table 23 is recommended to tighten the set screws to shaft.

The material for cast iron housing

The material of cast iron housing under ISO/DIS GG20, the mechanical properties please refer to table 25.

Proper tightening torque of set-screws — **Table 23**

Set-screws tap	Bearing type	Tightening torque		
mm	inch		N.m	lbf.in
M 5x0,8	No.10-32 UNF	SB 201 - SB 203, UC 201 - UC 203	3 - 3,5	28
M 6X1	1/4-28 UNF	SB 204 - SB 207, UC 204 - UC 206 SA 201 - SA 206, UEL201 - UEL 205 UC X05, UC 305 - UC306	3,5 - 4	30 - 35,4
M 8X1	5/16-24 UNF	SB 208, UC 207 - UC 209 SA 207 - SA 210, UEL 206 - UEL210 UC X06 - UC X08, UC 307	8,0 - 8,5	69 - 73,5
M 10X1,25	3/8-24 UNF	UC 210 - UC 212 SA 211, UEL 211 - UEL 215 UC X09 - UC X11, UC308 - 309	16,5 - 17,5	144 - 152
M 12X1,25	7/16-20 UNF	UC 213 - UC 218 UC X12 - UC X16 UC 310 - UC 314	26,5 - 27,5	235 - 243
M 14X1,5	1/2-20 UNF	UC 315 - UC 316	33,5 - 34,5	296 - 304

The mechanical properties of cast iron housing — **Table 25**

Number	Major wall thickness of casting piece	Strain stress	Hardness
	mm	N/mm^2	HB
ISO/DIS GG20	2,5-10	220	
U.S.A Grade 35	>10-20	195	170 - 220
JIS FC20	>20-30	170	
	30-50	160	

Pillow block type	page 368	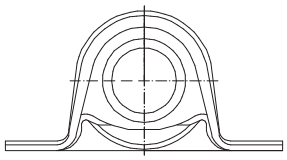
Flanged units type	page 383	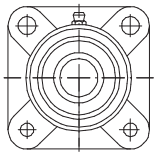
Two bolts flanged units type	page 394	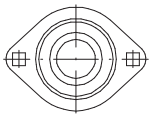
Flanged cartridge units type	page 409	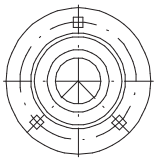
Hanger units type	page 416	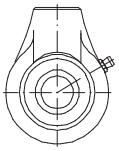
Cylindrical cartridge units type	page 418	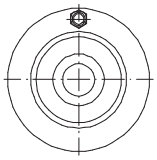
Take up units type	page 421	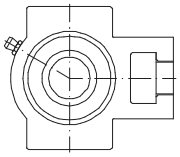
Insert bearings	page 428	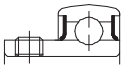

Standard duty pillow blocks pressed steel housing set screws type

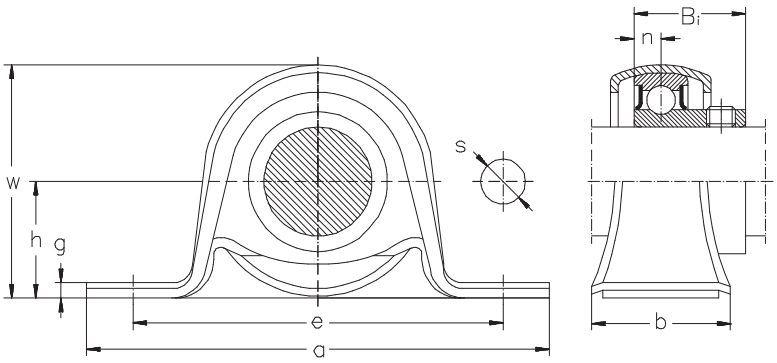

Shaft dia.	Nominal dimensions h	a	e	b	s	g	w	Bi	n	Bolt size	Unit number	Bearing number	Housing number	Weight
mm											—			kg
12	22,2	86	68	25	9,5	3,2	43,8	22	6	M8	**SBPP 201**	**SB 201**	**PP 203**	0,17
15	22,2	86	68	25	9,5	3,2	43,8	22	6	M8	**SBPP 202**	**SB 202**	**PP 203**	0,16
17	22,2	86	68	25	9,5	3,2	43,8	22	6	M8	**SBPP 203**	**SB 203**	**PP 203**	0,15
20	25,4	98	76	32	9,5	3,2	50,5	25	7	M8	**SBPP 204**	**SB 204**	**PP 204**	0,22
25	28,6	108	86	32	11,5	4	56,6	27	7,5	M10	**SBPP 205**	**SB 205**	**PP 205**	0,31
30	33,3	117	95	38	11,5	4	66,3	29	8	M10	**SBPP 206**	**SB 206**	**PP 206**	0,45
35	39,7	129	106	42	11,5	4,6	78	32	8,5	M10	**SBPP 207**	**SB 207**	**PP 207**	0,61

Note: Inch sizes available on request.

Standard duty pillow blocks cast housing set screws type

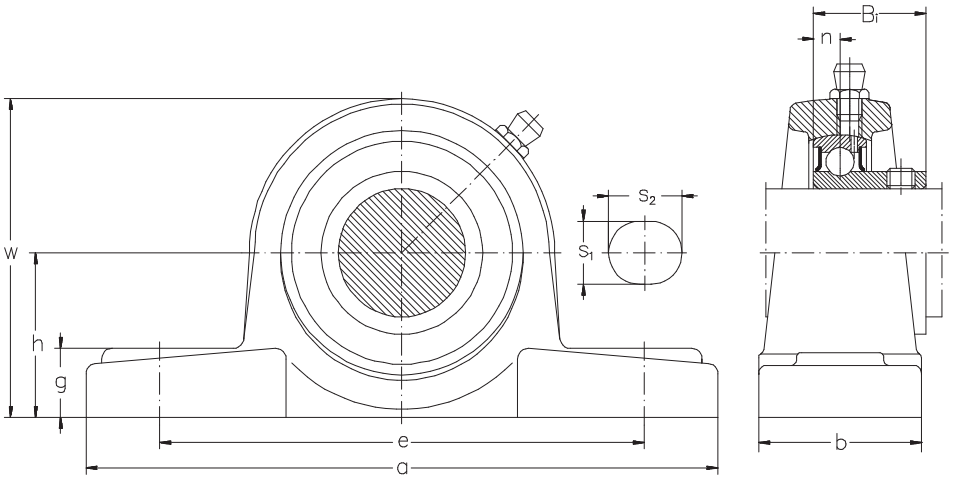

Shaft dia.	Nominal dimensions h	a	e	b	s1	s2	g	w	Bi	n	Bolt size	Unit number	Bearing number	Housing number	Weight
mm												—			kg
20	31,8	128	98	38	11	14	14	63	25	7	M10	**SBAK 204**	**SB 204**	**AK 204**	0,70
25	33,3	140	105	40	11	14	15	66,5	27	7,5	M10	**SBAK 205**	**SB 205**	**AK 205**	0,81
30	39,7	160	121	44	14	19	17	79	29	8	M12	**SBAK206**	**SB 206**	**AK 206**	1,18
35	46	167	127	48	14	19	18	91	32	8,5	M12	**SBAK 207**	**SB 207**	**AK 207**	1,61
40	49,2	181	140	52	14	19	19	98	34	9,5	M12	**SBAK 208**	**SB 208**	**AK 208**	1,99

Note: Inch sizes available on request.

Standard duty pillow blocks cast housing set screws type

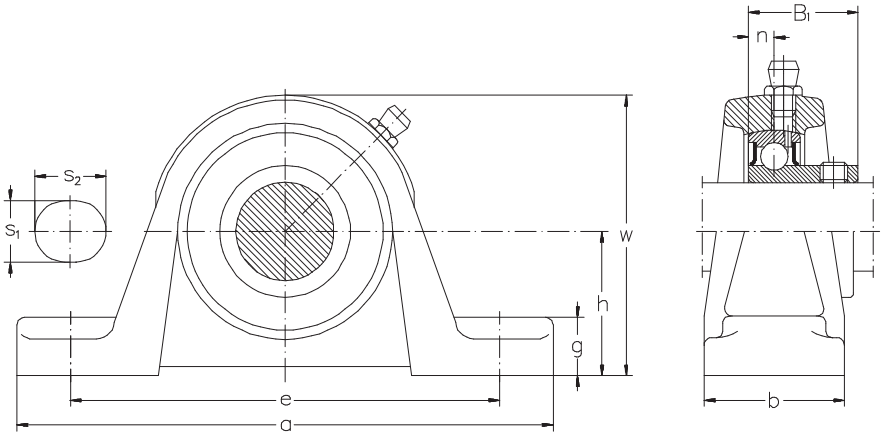

Shaft dia.	Nominal dimensions h	a	e	b	s1	s2	g	w	Bi	n	Bolt size	Unit number	Bearing number	Housing number	Weight
mm												—			kg
20	33,3	127	96	35	13	16	14	65	25	7,0	M10	**SBP 204**	**SB 204**	**P 204**	0,62
25	36,5	140	105	36	13	19	15	71	27	7,5	M10	**SBP 205**	**SB 205**	**P 205**	0,73
30	42,9	160	121	42	14	19	16	84	29	8	M12	**SBP 206**	**SB 206**	**P 206**	1,16
35	47,6	167	127	45	15	19	17	94	32	8,5	M12	**SBP 207**	**SB 207**	**P 207**	1,46
40	49,2	180	137	49	15	21	18	100	34	9,5	M12	**SBP 208**	**SB 208**	**P 208**	1,74

Note: Inch sizes available on request.

Standard duty pillow blocks cast housing set screws type

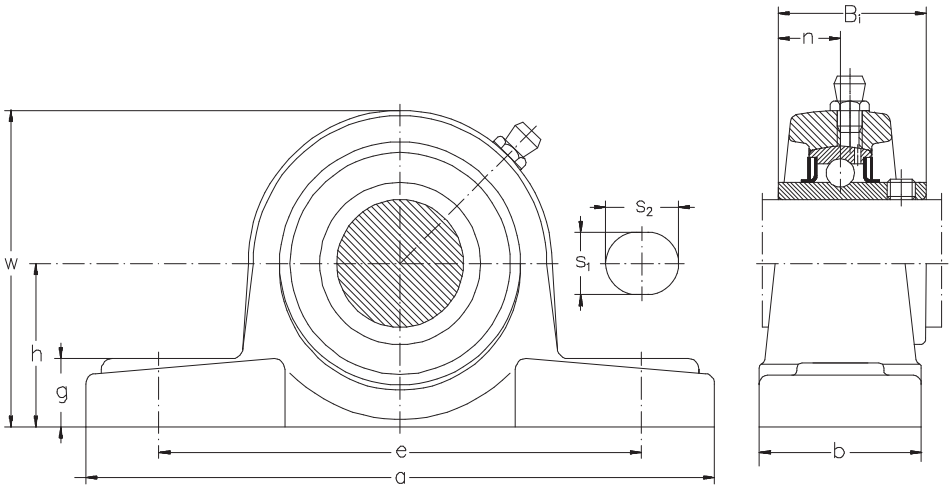

Shaft dia.	Nominal dimensions h	a	e	b	s_1	s_2	g	w	Bi	n	Bolt size	Unit number	Bearing number	Housing number	Weight
mm												—			kg
20	31,8	128	98	38	11	14	14	63	31	12,7	M10	**UCAK 204**	**UC 204**	**AK 204**	0,74
25	33,3	140	105	40	11	14	15	66,5	34	14,3	M10	**UCAK 205**	**UC 205**	**AK 205**	0,85
30	39,7	160	121	44	14	19	17	79	38,1	15,9	M12	**UCAK 206**	**UC 206**	**AK 206**	1,24
35	46,0	167	127	48	14	19	18	91	42,9	17,5	M12	**UCAK 207**	**UC 207**	**AK 207**	1,70
40	49,2	181	140	52	14	19	19	98	49,2	19	M12	**UCAK 208**	**UC 208**	**AK 208**	2,13
45	52,4	189	146	54	14	19	20	105	49,2	19	M12	**UCAK 209**	**UC 209**	**AK 209**	2,39
50	55,6	203	159	57	17,5	21	21	111,5	51,6	19	M16	**UCAK 210**	**UC 210**	**AK 210**	2,83
55	61,9	232	181	60	18	24	23	123	55,6	22,2	M16	**UCAK 211**	**UC 211**	**AK 211**	3,85
60	68,3	241	191	64	18	24	25	136	65,1	25,4	M16	**UCAK 212**	**UC 212**	**AK 212**	4,92
65	74,6	262	203	70	21	28	27	147,5	65,1	25,4	M20	**UCAK 213**	**UC 213**	**AK 213**	6,13
70	77,8	266	210	74	21	28	28	153,5	74,6	30,2	M20	**UCAK 214**	**UC 214**	**AK 214**	6,90
75	82,6	304	241	78	22	32	30	162	77,8	33,3	M20	**UCAK 215**	**UC 215**	**AK 215**	8,56

Note: Inch sizes available on request.

Standard duty pillow blocks cast housing set screws type

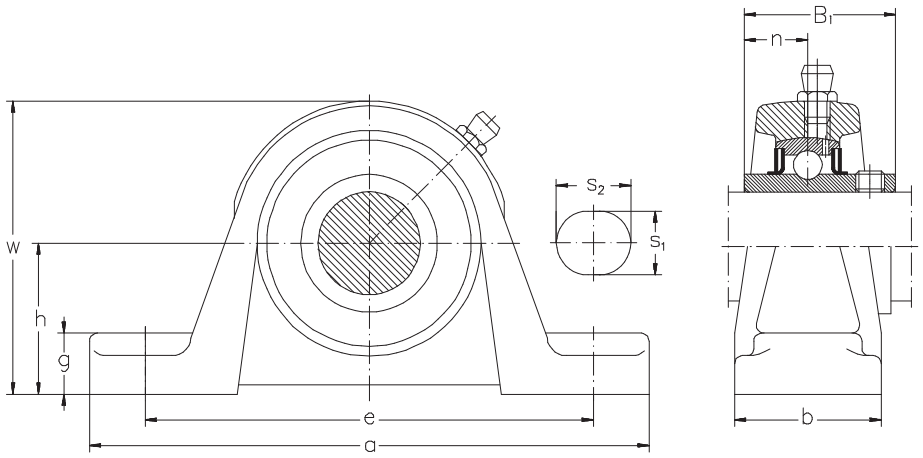

Shaft dia.	Nominal dimensions h	a	e	b	s_1	s_2	g	w	Bi	n	Bolt size	Unit number	Bearing number	Housing number	Weight
mm												—			kg
12	30,2	127	96	38	13	16	11	60,7	31	12,7	M10	**UCP 201**	**UC 201**	**P 203**	0,68
15	30,2	127	96	38	13	16	11	60,7	31	12,7	M10	**UCP 202**	**UC 202**	**P 203**	0,67
17	30,2	127	96	38	13	16	11	60,7	31	12,7	M10	**UCP 203**	**UC 203**	**P 203**	0,66
20	33,3	127	96	35	13	16	14	65,0	31	12,7	M10	**UCP 204**	**UC 204**	**P 204**	0,66
25	36,5	140	105	36	13	19	15	71,0	34	14,3	M10	**UCP 205**	**UC 205**	**P 205**	0,77
30	42,9	160	121	42	14	19	16	84,0	38,1	15,9	M12	**UCP 206**	**UC 206**	**P 206**	1,22
35	47,6	167	127	45	15	19	17	94,0	42,9	17,5	M12	**UCP 207**	**UC 207**	**P 207**	1,55
40	49,2	180	137	49	15	21	18	100,0	49,2	19	M12	**UCP 208**	**UC 208**	**P 208**	1,88
45	54	189	146	50	15	21	20	107,5	49,2	19	M12	**UCP 209**	**UC 209**	**P 209**	2,19
50	57,2	204	159	56	19	22	21	114,0	51,6	19	M16	**UCP 210**	**UC 210**	**P 210**	2,73
55	63,5	217	172	58	19	22	22	126	55,6	22,2	M16	**UCP 211**	**UC 211**	**P 211**	3,38
60	69,9	238	186	64	19	25	24	139	65,1	25,4	M16	**UCP 212**	**UC 212**	**P 212**	4,75
65	76,2	262	203	70	23	29	26	149	65,1	25,4	M20	**UCP 213**	**UC 213**	**P 213**	5,81
70	79,4	266	210	72	23	29	27	155	74,6	30,2	M20	**UCP 214**	**UC 214**	**P 214**	6,50
75	82,6	274	217	74	25	29	28	161,6	77,8	33,3	M20	**UCP 215**	**UC 215**	**P 215**	7,11
80	88,9	292	232	78	25	30	30	174	82,6	33,3	M20	**UCP 216**	**UC 216**	**P 216**	8,69
85	95,2	310	247	83	25	30	32	186	85,7	34,1	M20	**UCP 217**	**UC 217**	**P 217**	10,63
90	101,6	326	262	88	27	30	33	198	96	39,7	M22	**UCP 218**	**UC 218**	**P 218**	12,95

Note: Inch sizes available on request.

Standard duty pillow blocks cast housing set screws type

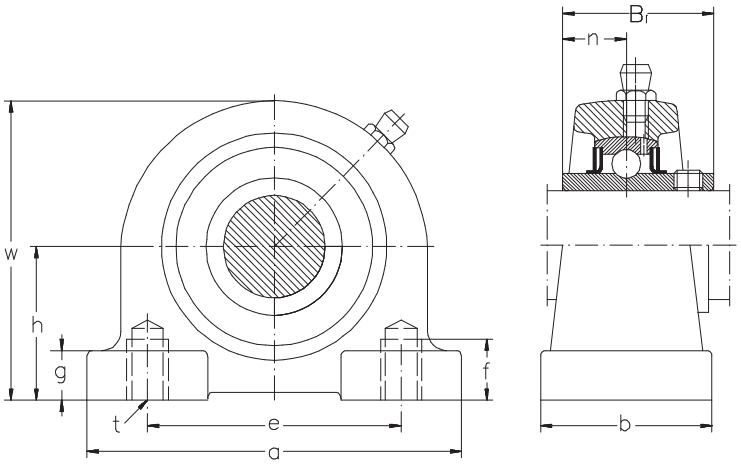

Shaft dia.	Nominal dimensions h	a	e	b	g	w	f	t	Bi	n	Bolt size	Unit number	Bearing number	Housing number	Weight
mm												—			kg
12	30,2	76	52	40	11	62	13	M10	31	12,7	M10	**UCPA 201**	**UC 201**	**PA 204**	0,57
15	30,2	76	52	40	11	62	13	M10	31	12,7	M10	**UCPA 202**	**UC 202**	**PA 204**	0,56
17	30,2	76	52	40	11	62	13	M10	31	12,7	M10	**UCPA 203**	**UC 203**	**PA 204**	0,55
20	30,2	76	52	40	11	62	13	M10	31	12,7	M10	**UCPA 204**	**UC 204**	**PA 204**	0,53
25	36,5	84	56	38	12	72	15	M10	34	14,3	M10	**UCPA 205**	**UC 205**	**PA 205**	0,71
30	42,9	94	66	48	13	84	18	M14	38,1	15,9	M14	**UCPA 206**	**UC 206**	**PA 206**	1,07
35	47,6	110	80	48	13	95	20	M14	42,9	17,5	M14	**UCPA 207**	**UC 207**	**PA 207**	1,49
40	49,2	116	84	54	13	100	20	M14	49,2	19	M14	**UCPA 208**	**UC 208**	**PA 208**	1,75
45	54,2	120	90	60	13	108	25	M14	49,2	19	M14	**UCPA 209**	**UC 209**	**PA 209**	2,17
50	57,2	130	94	60	14	116	25	M16	51,6	19	M16	**UCPA 210**	**UC 211**	**PA 210**	2,53
55	63,5	140	104	66	14	125	25	M16	55,6	22,2	M16	**UCPA 211**	**UC 211**	**PA 211**	3,17
60	69,9	150	114	68	15	138	25	M16	65,1	25,4	M16	**UCPA 212**	**UC 212**	**PA 212**	4,17
65	76,2	160	124	70	15	150	25	M16	65,1	25,4	M16	**UCPA 213**	**UC 213**	**PA 213**	4,96

Note: Inch sizes available on request.

Standard duty pillow blocks cast housing set screws type

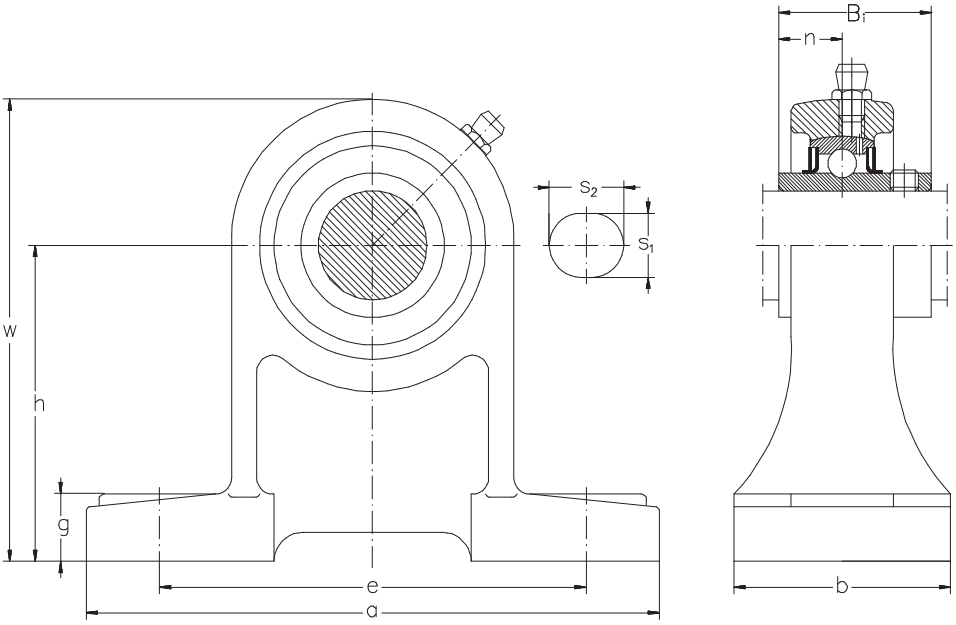

Shaft dia.	Nominal dimensions h	a	e	b	s_1	s_2	g	w	Bi	n	Bolt size	Unit number	Bearing number	Housing number	Weight
mm												—			kg
12	70	127	95	40	12	16	13	101	30	12,7	M10	**UCPH 201**	**UC 201**	**PH 204**	0,81
15	70	127	95	40	12	16	13	101	30	12,7	M10	**UCPH 202**	**UC 202**	**PH 204**	0,80
17	70	127	95	40	12	16	13	101	31	12,7	M10	**UCPH 203**	**UC 203**	**PH 204**	0,79
20	70	127	95	40	12	16	13	101	31	12,7	M10	**UCPH 204**	**UC 204**	**PH 204**	0,77
25	80	140	105	50	13	19	16	114	34	14,3	M10	**UCPH 205**	**UC 205**	**PH 205**	1,01
30	90	165	121	50	17	21	18	130	38,1	15,9	M14	**UCPH 206**	**UC 206**	**PH 206**	1,56
35	95	167	127	60	17	21	19	140	42,9	17,5	M14	**UCPH 207**	**UC 207**	**PH 207**	1,88
40	100	184	137	66	17	21	20	150	49,2	19,0	M14	**UCPH 208**	**UC 208**	**PH 208**	2,44
45	105	190	146	70	17	21	20	158	49,2	19,0	M14	**UCPH 209**	**UC 209**	**PH 209**	2,72
50	110	204	159	70	19	22	22	165	51,6	19,0	M16	**UCPH 210**	**UC 210**	**PH 210**	3,08
55	120	217	171	75	19	22	23	181	55,6	22,2	M16	**UCPH 211**	**UC 211**	**PH 211**	4,05
60	130	236	186	80	19	22	24	197	65,1	25,4	M16	**UCPH 212**	**UC 212**	**PH 212**	4,78
65	140	258	203	85	23	28	26	213	65,1	25,4	M20	**UCPH 213**	**UC 213**	**PH 213**	5,93
70	150	266	210	90	23	28	27	227	74,6	30,2	M20	**UCPH 214**	**UC 214**	**PH 214**	6,99
75	160	274	217	95	23	28	28	240	77,8	33,3	M20	**UCPH 215**	**UC 215**	**PH 215**	7,84
80	170	290	232	100	24	28	30	256	82,6	33,3	M20	**UCPH 216**	**UC 216**	**PH 216**	9,13

Note: Inch sizes available on request.

Standard duty pillow blocks pressed steel housing eccentric locking collar type

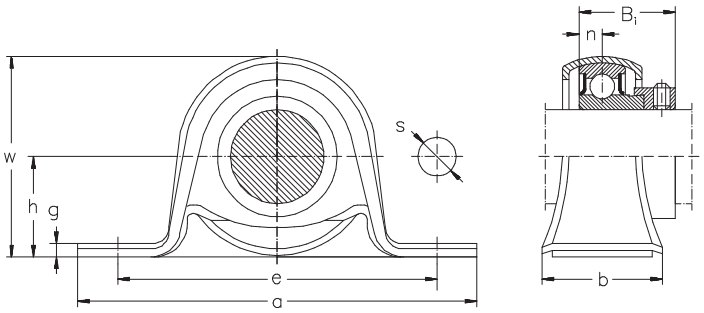

Shaft dia.	Nominal dimensions h	a	e	b	s	g	w	Bi	n	Bolt size	Unit number	Bearing number	Housing number	Weight
mm											—			kg
12	22,2	86	68	25	9,5	3,2	43,8	28,5	6	M8	**SAPP 201**	**SA 201**	**PP 203**	0,21
15	22,2	86	68	25	9,5	3,2	43,8	28,5	6	M8	**SAPP 202**	**SA 202**	**PP 203**	0,20
17	22,2	86	68	25	9,5	3,2	43,8	28,5	6	M8	**SAPP 203**	**SA 203**	**PP 203**	0,19
20	25,4	98	76	32	9,5	3,2	50,5	29,5	7	M8	**SAPP 204**	**SA 204**	**PP 204**	0,27
25	28,6	108	86	32	11,5	4	56,6	30,5	7,5	M10	**SAPP 205**	**SA 205**	**PP 205**	0,34
30	33,3	117	95	38	11,5	4	66,3	33,9	8	M10	**SAPP 206**	**SA 206**	**PP 206**	0,52
35	39,7	129	106	42	11,5	4,6	78	37,5	8,5	M10	**SAPP 207**	**SA 207**	**PP 207**	0,73

Note: Inch sizes available on request.

Standard duty pillow blocks cast housing eccentric locking collar type

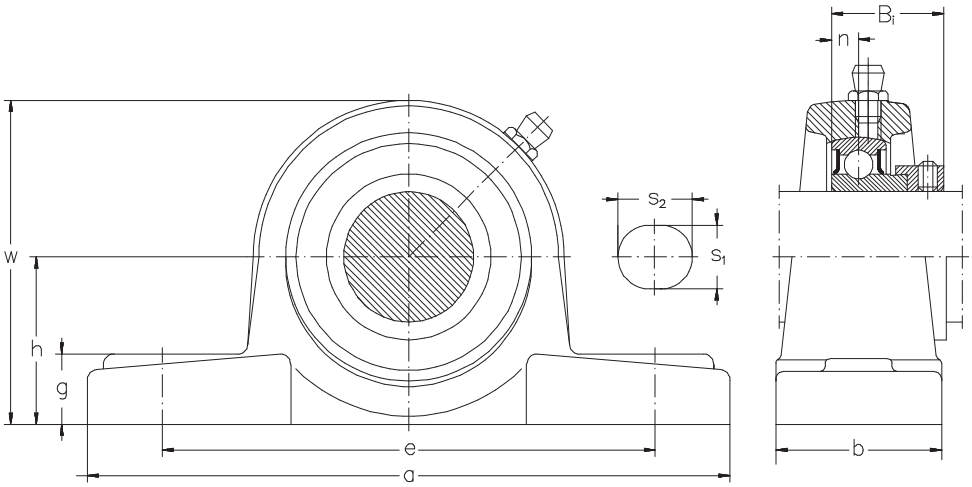

Shaft dia.	Nominal dimensions h	a	e	b	s_1	s_2	g	w	Bi	n	Bolt size	Unit number	Bearing number	Housing number	Weight
mm												—			kg
20	31,8	128	98	38	11	14	14	63,0	29,5	7,0	M10	**SAAK 204**	**SA 204**	**AK 204**	0,75
25	33,3	140	105	40	11	14	15	66,5	30,5	7,5	M10	**SAAK 205**	**SA 205**	**AK 205**	0,84
30	39,7	160	121	44	14	19	17	79	33,9	8	M12	**SAAK 206**	**SA 206**	**AK 206**	1,25
35	46	167	127	48	14	19	18	91	37,5	8,5	M12	**SAAK 207**	**SA 207**	**AK 207**	1,73
40	49,2	181	140	52	14	19	19	98	40,5	9,5	M12	**SAAK 208**	**SA 208**	**AK 208**	2,14
45	52,4	189	146	54	14	19	20	105	42,2	10	M12	**SAAK 209**	**SA 209**	**AK 209**	2,40
50	55,6	203	159	57	17,5	21	21	111,5	43,7	10,5	M16	**SAAK 210**	**SA 210**	**AK 210**	2,83
55	61,9	232	181	60	18	24	23	123	48,4	11,5	M16	**SAAK 211**	**SA 211**	**AK 211**	3,60

Note: Inch sizes available on request.

Standard duty pillow blocks cast housing eccentric locking collar type

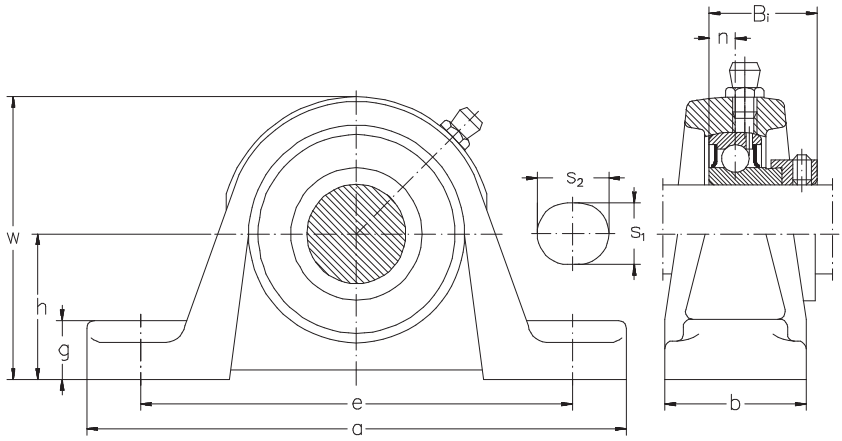

Shaft dia.	Nominal dimensions h	a	e	b	s1	s2	g	w	Bi	n	Bolt size	Unit number	Bearing number	Housing number	Weight
mm												—			kg
20	33,3	127	96	35	13	16	14	65	29,5	7	M10	**SAP 204**	**SA 204**	**P 204**	0,67
25	36,5	140	105	36	13	19	15	71	30,5	7,5	M10	**SAP 205**	**SA 205**	**P 205**	0,76
30	42,9	160	121	42	14	19	16	84	33,9	8	M12	**SAP 206**	**SA 206**	**P 206**	1,23
35	47,6	167	127	45	15	19	17	94	37,5	8,5	M12	**SAP 207**	**SA 207**	**P 207**	1,58
40	49,2	180	137	49	15	21	18	100	40,5	9,5	M12	**SAP 208**	**SA 208**	**P 208**	1,89
45	54	189	146	50	15	21	20	107,5	42,2	10	M12	**SAP 209**	**SA 209**	**P 209**	2,20
50	57,2	204	159	56	19	22	21	114	43,7	10,5	M16	**SAP 210**	**SA 210**	**P 210**	2,73
55	63,5	217	172	58	19	22	22	126	48,4	11,5	M16	**SAP 211**	**SA 211**	**P 211**	3,13

Note: Inch sizes available on request.

Standard duty pillow blocks cast housing eccentric locking collar type

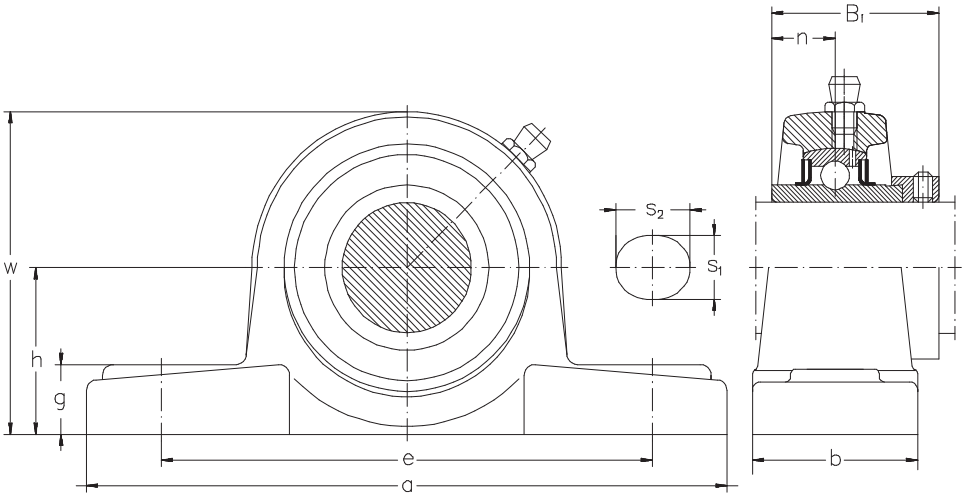

Shaft dia.	Nominal dimensions h	a	e	b	s_1	s_2	g	w	Bi	n	Bolt size	Unit number	Bearing number	Housing number	Weight
mm												—			kg
20	31,8	128	98	38	11	14	14	63,0	43,5	17	M10	**UELAK 204**	**UEL 204**	**AK 204**	0,79
25	33,3	140	105	40	11	14	15	66,5	44,3	17,4	M10	**UELAK 205**	**UEL 205**	**AK 205**	0,89
30	39,7	160	121	44	14	19	17	79,0	48,3	18,2	M12	**UELAK 206**	**UEL 206**	**AK 206**	1,33
35	46,0	167	127	48	14	19	18	91,0	51,1	18,8	M12	**UELAK 207**	**UEL 207**	**AK 207**	1,83
40	49,2	181	140	52	14	19	19	98,0	56,3	21,4	M12	**UELAK 208**	**UEL 208**	**AK 208**	2,27
45	52,4	189	146	54	14	19	20	105,0	56,3	21,4	M12	**UELAK 209**	**UEL 209**	**AK 209**	2,56
50	55,6	203	159	57	17,5	21	21	111,5	62,7	24,6	M16	**UELAK 210**	**UEL 210**	**AK 210**	3,04
55	61,9	232	181	60	18	24	23	123	71,3	27,7	M16	**UELAK 211**	**UEL 211**	**AK 211**	4,12
60	68,3	241	191	64	18	24	25	136	77,7	30,9	M16	**UELAK 212**	**UEL 212**	**AK 212**	5,26
65	74,6	262	203	70	21	28	27	147,5	85,7	34,1	M20	**UELAK 213**	**UEL 213**	**AK 213**	6,68
70	77,8	266	210	74	21	28	28	153,5	85,7	34,1	M20	**UELAK 214**	**UEL 214**	**AK 214**	7,42
75	82,6	304	241	78	21	32	30	162	92,1	37,3	M20	**UELAK 215**	**UEL 215**	**AK 215**	9,19

Note: Inch sizes available on request.

Standard duty pillow blocks cast housing eccentric locking collar type

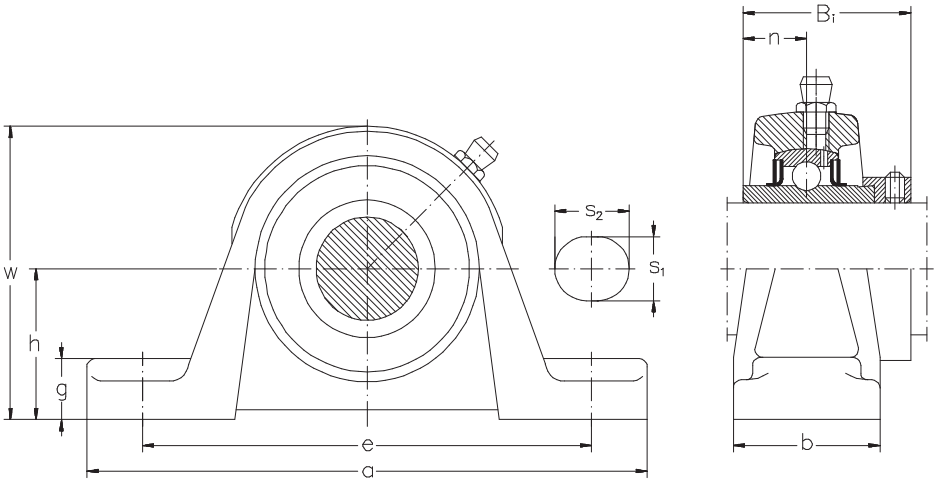

Shaft dia.	Nominal dimensions h	a	e	b	s1	s2	g	w	Bi	n	Bolt size	Unit number	Bearing number	Housing number	Weight
mm												—			kg
12	30,2	127	96	38	13	16	11	60,7	43,5	17,0	M10	**UELP 201**	**UEL 201**	**P 203**	0,74
15	30,2	127	96	38	13	16	11	60,7	43,5	17,0	M10	**UELP 202**	**UEL 202**	**P 203**	0,72
17	30,2	127	96	38	13	16	11	60,7	43,5	17,0	M10	**UELP 203**	**UEL 203**	**P 203**	0,71
20	33,3	127	96	35	13	16	14	65,0	43,5	17,0	M10	**UELP 204**	**UEL 204**	**P 204**	0,71
25	36,5	140	105	36	13	19	15	71,0	44,3	17,4	M10	**UELP 205**	**UEL 205**	**P 205**	0,81
30	42,9	160	121	42	14	19	16	84,0	48,3	18,2	M12	**UELP 206**	**UEL 206**	**P 206**	1,31
35	47,6	167	127	45	15	19	17	94,0	51,1	18,8	M12	**UELP 207**	**UEL 207**	**P 207**	1,68
40	49,2	180	137	49	15	21	18	100,0	56,3	21,4	M12	**UELP 208**	**UEL 208**	**P 208**	2,02
45	54	189	146	50	15	21	20	107,5	56,3	21,4	M12	**UELP 209**	**UEL 209**	**P 209**	2,36
50	57,2	204	159	56	19	22	21	114,0	62,7	24,6	M16	**UELP 210**	**UEL 210**	**P 210**	2,94
55	63,5	217	172	58	19	22	22	126	71,3	27,7	M16	**UELP 211**	**UEL 211**	**P 211**	3,59
60	69,9	238	186	64	19	25	24	139	77,7	30,9	M16	**UELP 212**	**UEL 212**	**P 212**	4,95
65	76,2	262	203	70	23	29	26	149	85,7	34,1	M20	**UELP 213**	**UEL 213**	**P 213**	6,35
70	79,4	266	210	72	23	29	27	155	85,7	34,1	M20	**UELP 214**	**UEL 214**	**P 214**	6,95
75	82,6	274	217	74	25	29	28	161,6	92,1	37,3	M20	**UELP 215**	**UEL 215**	**P 215**	7,70

Note: Inch sizes available on request.

Standard duty pillow blocks cast housing adapter type

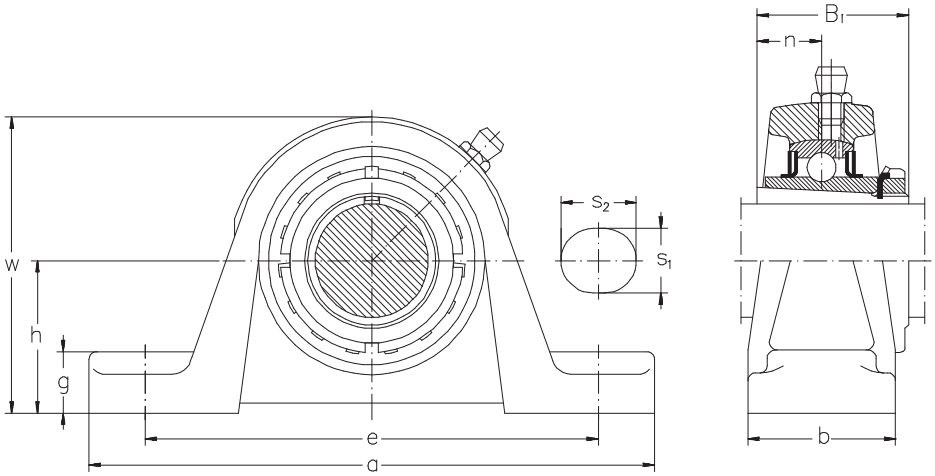

Shaft dia.	Nominal dimensions h	a	e	b	s_1	s_2	g	w	Bi	Bolt size	Unit number	Bearing number	Housing number	Weight
mm											—			kg
20	36,5	140	105	36	13	19	15	71	35	M10	**UKP 205**	**UK 205**	**P 205**	0,71
25	42,9	160	121	42	14	19	16	84	38	M12	**UKP 206**	**UK 206**	**P 206**	1,15
30	47,6	167	127	45	15	19	17	94	43	M12	**UKP 207**	**UK 207**	**P 207**	1,45
35	49,2	180	137	49	15	21	18	100	46	M12	**UKP 208**	**UK 208**	**P 208**	1,72
40	54	189	146	50	15	21	20	107,5	50	M12	**UKP 209**	**UK 209**	**P 209**	2,04
45	57,2	204	159	56	19	22	21	114	55	M16	**UKP 210**	**UK 210**	**P 210**	2,52
50	63,5	217	172	58	19	22	22	126	59	M16	**UKP 211**	**UK 211**	**P 211**	3,03
55	69,9	238	186	64	19	25	24	139	62	M16	**UKP 212**	**UK 212**	**P 212**	4,25
60	76,2	262	203	70	23	29	26	149	65	M20	**UKP 213**	**UK 213**	**P 213**	5,31

Standard duty pillow blocks cast housing adapter type

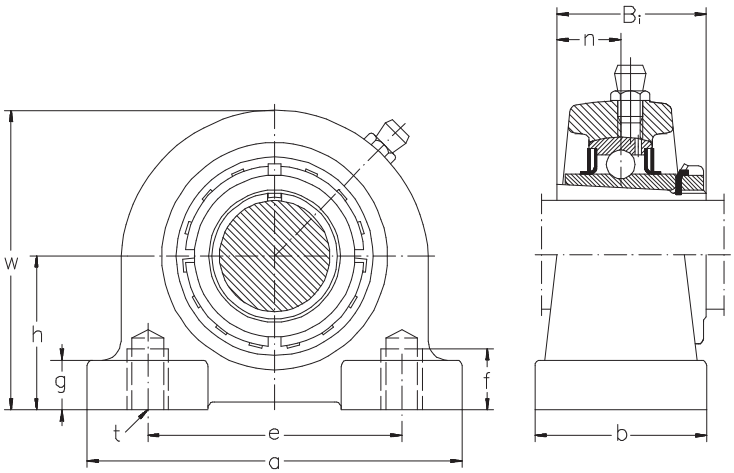

Shaft dia.	Nominal dimensions h	a	e	b	g	w	f	t	Bi	Bolt size	Unit number	Bearing number	Housing number	Weight
mm											—		kg	
20	36,5	84	56	38	12	72	15	M10	35	M10	**UKPA 205**	**UK 205**	**PA 205**	0,65
25	42,9	94	66	48	13	84	18	M14	38	M14	**UKPA 206**	**UK 206**	**PA 206**	1,00
30	47,6	110	80	48	13	95	20	M14	43	M14	**UKPA 207**	**UK 207**	**PA 207**	1,39
35	49,2	116	84	54	13	100	20	M14	46	M14	**UKPA 208**	**UK 208**	**PA 208**	1,59
40	54,2	120	90	60	13	108	25	M14	50	M14	**UKPA 209**	**UK 209**	**PA 209**	2,02
45	57,2	130	94	60	14	116	25	M16	55	M16	**UKPA 210**	**UK 210**	**PA 209**	2,32
50	63,5	140	104	66	14	125	25	M16	59	M16	**UKPA 211**	**UK 211**	**PA 211**	2,82
55	69,9	150	114	68	15	138	25	M16	62	M16	**UKPA 212**	**UK 212**	**PA 212**	3,67
60	76,2	160	124	70	15	150	25	M16	65	M16	**UKPA 213**	**UK 213**	**PA 213**	4,46

Medium duty pillow blocks cast housing set screws type

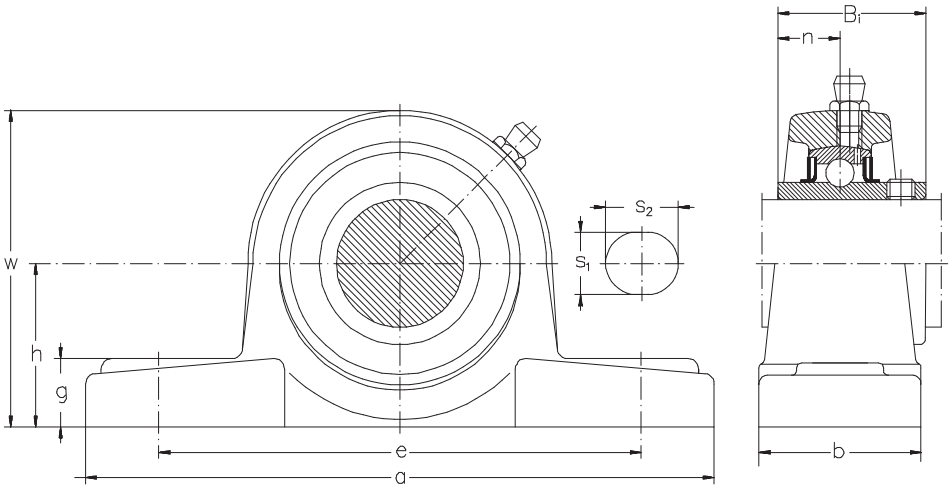

Shaft dia.	Nominal dimensions h	a	e	b	s_1	s_2	g	w	Bi	n	Bolt size	Unit number	Bearing number	Housing number	Weight
mm												—			kg
25	44,4	159	119	51	17	20	17	85	38,1	15,9	M14	**UCP X05**	**UC X05**	**P X05**	1,48
30	47,6	175	127	54	17	20	20	93	42,9	17,5	M14	**UCP X06**	**UC X06**	**P X06**	1,85
35	54	203	144	57	17	20	21	105	49,2	19	M14	**UCP X07**	**UC X07**	**P X07**	2,49
40	58,7	222	156	65	20	23	23	112	49,2	19	M16	**UCP X08**	**UC X08**	**P X08**	3,13
45	58,7	222	156	67	20	23	25	116	51,6	19	M16	**UCP X09**	**UC X09**	**P X09**	3,35
50	63,5	240	171	71	20	23	25	126	55,6	22,2	M16	**UCP X10**	**UC X10**	**P X10**	4,17
55	69,8	260	184	79	25	28	29	137	65,1	25,4	M20	**UCP X11**	**UC X11**	**P X11**	5,65
60	76,2	280	203	81	25	28	31	149	65,1	25,4	M20	**UCP X12**	**UC X12**	**P X12**	6,80
65	76,2	286	203	83	25	28	33	152	74,6	30,2	M20	**UCP X13**	**UC X13**	**P X13**	7,42
70	88,9	320	229	85	27	30	34	170	77,8	33,3	M22	**UCP X14**	**UC X14**	**P X14**	9,59
75	88,9	330	229	92	27	30	35	175	82,6	33,3	M22	**UCP X15**	**UC X15**	**P X15**	10,91
80	101,6	378	283	99	27	30	37	194	85,7	34,1	M22	**UCP X16**	**UC X16**	**PX 16**	15,09

Note: Inch sizes available on request.

Heavy duty pillow blocks cast housing set screws type

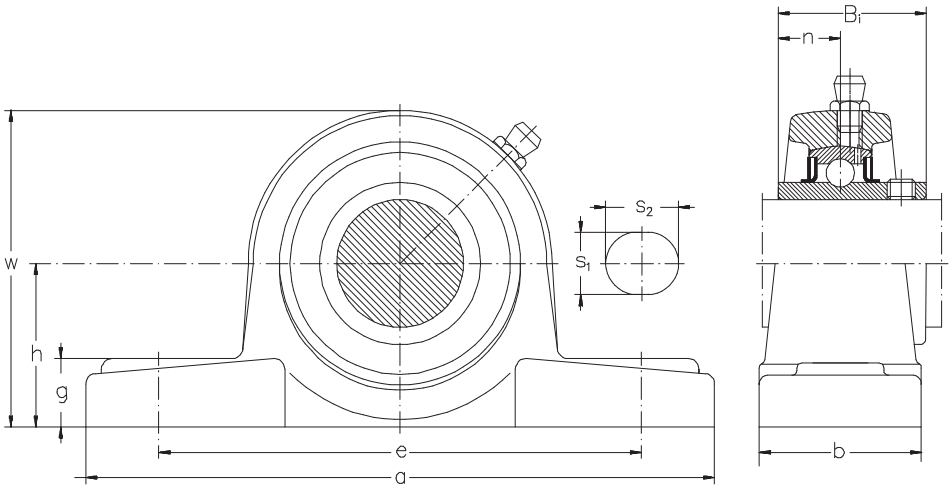

Shaft dia.	Nominal dimensions h	a	e	b	s1	s2	g	w	Bi	n	Bolt size	Unit number	Bearing number	Housing number	Weight
mm												—			kg
25	45	173	132	45	17	20	15	85	38	15	M14	**UCP 305**	**UC 305**	**P 305**	1,27
30	50	180	140	50	17	20	15	95	43	17	M14	**UCP 306**	**UC 306**	**P 306**	1,86
35	56	210	160	56	17	25	19	106	48	19	M14	**UCP 307**	**UC 307**	**P 307**	2,66
40	60	218	170	62	18	25	19	116	52	19	M14	**UCP 308**	**UC 308**	**P 308**	3,37
45	67	244	190	66	20	26	23	129	57	22	M16	**UCP 309**	**UC 309**	**P 309**	4,26
50	75	271	212	74	20	30	26	143	61	22	M16	**UCP 310**	**UC 310**	**P 310**	6,17
55	80	300	236	80	20	32	29	154	66	25	M16	**UCP 311**	**UC 311**	**P 311**	7,12
60	85	325	250	85	23	35	31	164	71	26	M20	**UCP 312**	**UC 312**	**P 312**	9,10
65	90	335	260	90	25	38	33	176	75	30	M20	**UCP 313**	**UC 313**	**P 313**	11,04
70	95	360	280	93	27	40	34	187	78	33	M22	**UCP 314**	**UC 314**	**P 314**	12,82
75	100	380	290	100	27	40	35	198	82	32	M22	**UCP 315**	**UC 315**	**P 315**	15,40
80	106	400	300	105	27	40	37	210	86	34	M22	**UCP 316**	**UC 316**	**P 316**	18,00

Note: Inch sizes available on request.

Standard duty flanged units cast housing set screws type

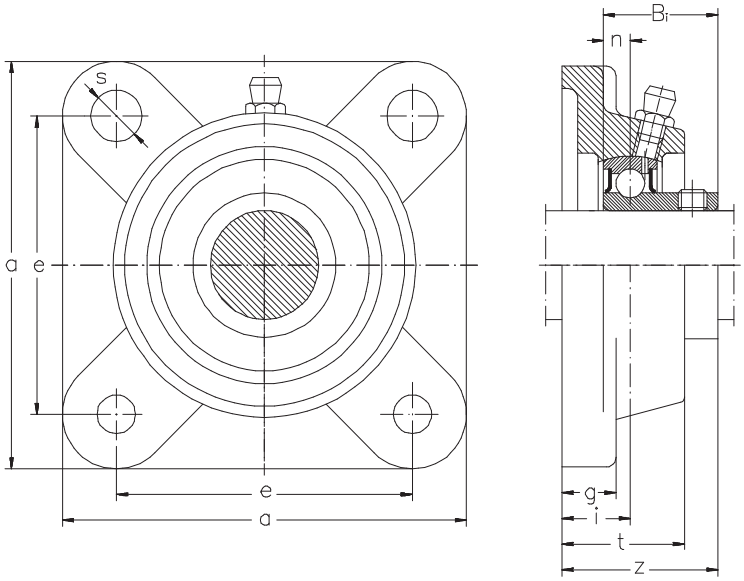

Shaft dia.	Nominal dimensions a	e	i	g	t	s	z	Bi	n	Bolt size	Unit number	Bearing number	Housing number	Weight
mm											—			kg
20	86	63,5	19	15	29,5	11,5	37,0	25	7,0	M10	**SBFS 204**	**SB 204**	**FS 204**	0,59
25	93	70,0	19	15	30,0	11,5	38,5	27	7,5	M10	**SBFS 205**	**SB 205**	**FS 205**	0,72
30	106	82,5	20	16	32,5	13,0	41,0	29	8,0	M12	**SBFS 206**	**SB 206**	**FS 206**	0,95
35	116	92,0	21	17	35,0	13,0	44,5	32	8,5	M12	**SBFS 207**	**SB 207**	**FS 207**	1,25
40	129	101,5	24	17	39,0	14,0	48,5	34	9,5	M12	**SBFS 208**	**SB 208**	**FS 208**	1,60

Note: Inch sizes available on request.

Standard duty flanged units cast housing set screws type

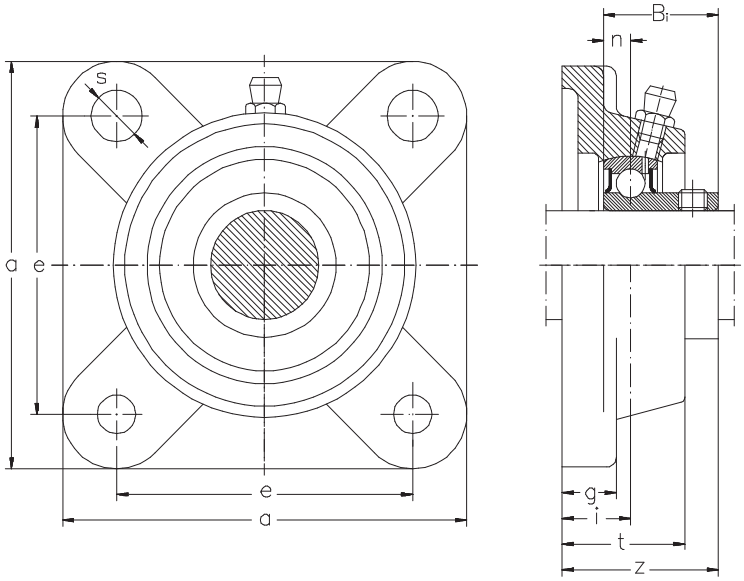

Shaft dia.	Nominal dimensions a	e	i	g	t	s	z	Bi	n	Bolt size	Unit number	Bearing number	Housing number	Weight
mm											—			kg
20	86	64	15	12	25,5	12	33,0	25	7,0	M10	**SBF 204**	**SB 204**	**F 204**	0,49
25	95	70	16	13	27,0	12	35,5	27	7,5	M10	**SBF 205**	**SB 205**	**F 205**	0,70
30	108	83	18	13	31,0	12	39,0	29	8,0	M10	**SBF 206**	**SB 206**	**F 206**	0,99
35	117	92	19	15	34,0	14	42,5	32	8,5	M12	**SBF 207**	**SB 207**	**F 207**	1,25
40	130	102	21	15	36,0	16	45,5	34,0	9,5	M14	**SBF 208**	**SB 208**	**F 208**	1,63

Note: Inch sizes available on request.

Standard duty flanged units cast housing set screws type

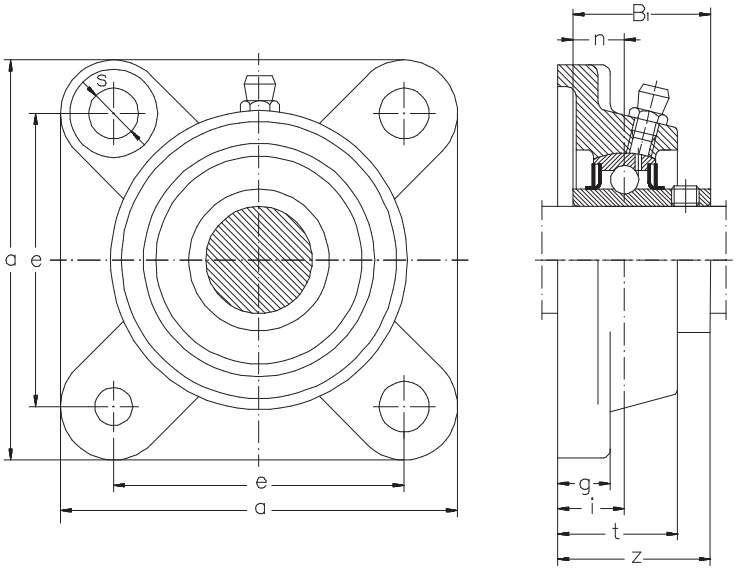

Shaft dia.	Nominal dimensions a	e	i	g	t	s	z	Bi	n	Bolt size	Unit number	Bearing number	Housing number	Weight
mm											—			kg
20	86	63,5	19	15	29,5	11,5	37,3	31,0	12,7	M10	**UCFS 204**	**UC 204**	**FS 204**	0,63
25	93	70,0	19	15	30,0	11,5	38,7	34,0	14,3	M10	**UCFS 205**	**UC 205**	**FS 205**	0,76
30	106	82,5	20	16	32,5	13,0	42,2	38,1	15,9	M12	**UCFS 206**	**UC 206**	**FS 206**	1,01
35	116	92,0	21	17	35,0	13,0	46,4	42,9	17,5	M12	**UCFS 207**	**UC 207**	**FS 207**	1,34
40	129	101,5	24	17	39,0	14,0	54,2	49,2	19,0	M12	**UCFS 208**	**UC 208**	**FS 208**	1,74
45	135	105,0	24	18	40,0	16,0	54,2	49,2	19,0	M14	**UCFS 209**	**UC 209**	**FS 209**	1,98
50	143	111,0	28	20	45,0	16,0	60,6	51,6	19,0	M14	**UCFS 210**	**UC 210**	**FS 210**	2,43
55	162	130,0	31	21	49,0	17,0	64,4	55,6	22,2	M14	**UCFS 211**	**UC 211**	**FS 211**	3,43
60	175	143,0	34	22	53,5	17,0	73,7	65,1	25,4	M14	**UCFS 212**	**UC 212**	**FS 212**	4,24
65	184	149,0	38	22	58,0	18,0	77,7	65,1	25,4	M16	**UCFS 213**	**UC 213**	**FS 213**	5,11
70	188	152,0	38	23	60,0	18,0	82,4	74,6	30,2	M16	**UCFS 214**	**UC 214**	**FS 214**	5,30
75	200	152,4	41	24	62,0	20,0	85,5	77,8	33,3	M16	**UCFS 215**	**UC 215**	**FS 215**	6,38

Note: Inch sizes available on request.

Standard duty flanged units cast housing set screws type

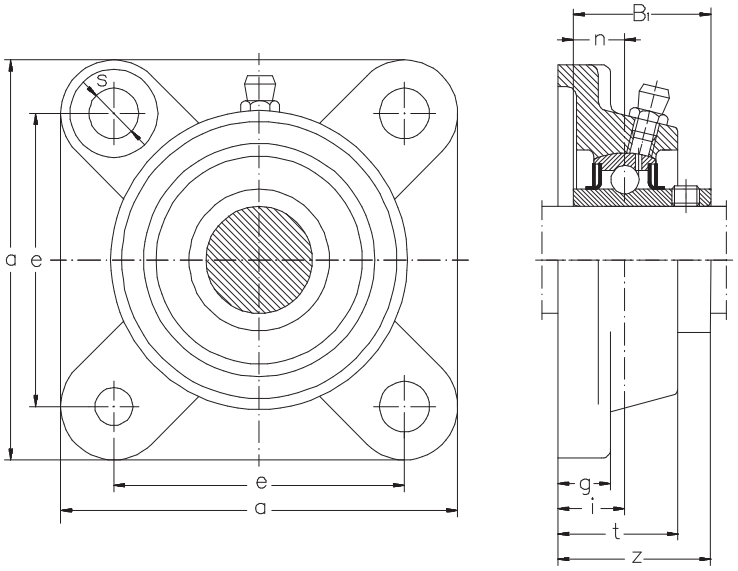

Shaft dia.	Nominal dimensions a	e	i	g	t	s	z	Bi	n	Bolt size	Unit number	Bearing number	Housing number	Weight
mm											—			kg
12	86	64	15	12	25,5	12	33,3	31,0	12,7	M10	**UCF 201**	**UC 201**	**F 204**	0,57
15	86	64	15	12	25,5	12	33,3	31,0	12,7	M10	**UCF 202**	**UC 202**	**F 204**	0,56
17	86	64	15	12	25,5	12	33,3	31,0	12,7	M10	**UCF 203**	**UC 203**	**F 204**	0,55
20	86	64	15	12	25,5	12	33,3	31,0	12,7	M10	**UCF 204**	**UC 204**	**F 204**	0,53
25	95	70	16	13	27	12	35,7	34,0	14,3	M10	**UCF 205**	**UC 205**	**F 205**	0,74
30	108	83	18	13	31	12	40,2	38,1	15,9	M10	**UCF 206**	**UC 206**	**F 206**	1,05
35	117	92	19	15	34	14	44,4	42,9	17,5	M12	**UCF 207**	**UC 207**	**F 207**	1,34
40	130	102	21	15	36	16	51,2	49,2	19	M14	**UCF 208**	**UC 208**	**F 208**	1,77
45	137	105	22	16	38	16	52,2	49,2	19	M14	**UCF 209**	**UC 209**	**F 209**	2,05
50	143	111	22	16	40	16	54,6	51,6	19	M14	**UCF 210**	**UC 210**	**F 210**	2,35
55	162	130	25	18	43	19	58,4	55,6	22,2	M16	**UCF 211**	**UC 211**	**F 211**	3,00
60	175	143	29	18	48	19	68,7	65,1	25,4	M16	**UCF 212**	**UC 212**	**F 212**	3,57
65	187	149	30	22	50	19	69,7	65,1	25,4	M16	**UCF 213**	**UC 213**	**F 213**	4,92
70	193	152'	31	22	54,	19	75,4	74,6	30,2	M16	**UCF 214**	**UC 214**	**F 214**	5,62
75	200	159	34	22	56	19	78,5	77,8	33,3	M16	**UCF 215**	**UC 215**	**F 215**	5,55
80	208	165	34	24	58	23	83,3	82,6	33,3	M20	**UCF 216**	**UC 216**	**F 216**	6,99
85	220	175	36	26	63	23	87,6	85,7	34,1	M20	**UCF 217**	**UC 217**	**F 217**	8,58
90	235	187	40	26	68	23	96,3	96,0	39,7	M20	**UCF 218**	**UC 218**	**F 218**	11,20

Note: Inch sizes available on request.

Standard duty flanged units cast housing eccentric locking collar type

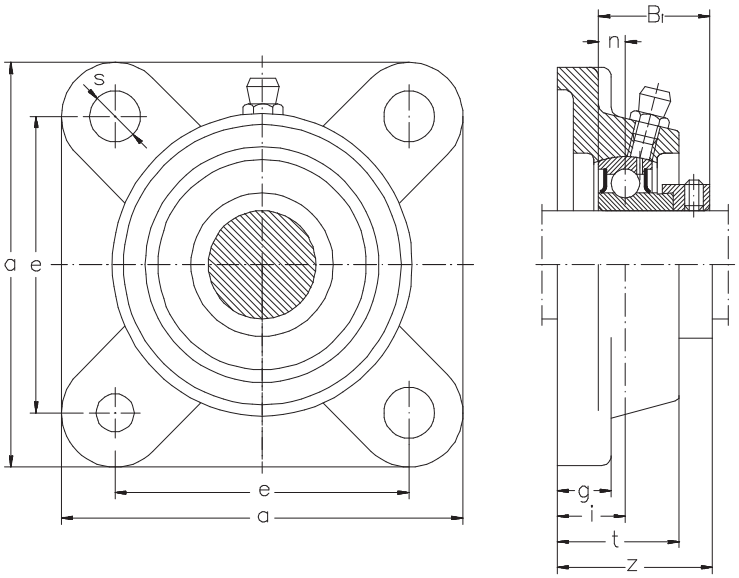

Shaft dia.	Nominal dimensions a	e	i	g	t	s	z	Bi	n	Bolt size	Unit number	Bearing number	Housing number	Weight
mm											—			kg
20	86	63,5	19	15	29,5	11,5	41,5	29,5	7,0	M10	**SAFS 204**	**SA 204**	**FS 204**	0,64
25	93	70,0	19	15	30,0	11,5	42,0	30,5	7,5	M10	**SAFS 205**	**SA 205**	**FS 205**	0,75
30	106	82,5	20	16	32,5	13,0	45,9	33,9	8,0	M12	**SAFS 206**	**SA 206**	**FS 206**	1,02
35	116	92,0	21	17	35,0	13,0	50,0	37,5	8,5	M12	**SAFS 207**	**SA 207**	**FS 207**	1,37
40	129	101,5	24	17	39,0	14,0	55,0	40,5	9,5	M12	**SAFS 208**	**SA 208**	**FS 208**	1,75
45	135	105,0	24	18	40,0	16,0	56,2	42,2	10,0	M14	**SAFS 209**	**SA 209**	**FS 209**	1,99
50	143	111,0	28	20	45,0	16,0	61,2	43,7	10,5	M14	**SAFS 210**	**SA 210**	**FS 210**	2,43
55	162	130,0	31	21	49,0	17,0	67,9	48,4	11,5	M14	**SAFS 211**	**SA 211**	**FS 211**	3,18

Note: Inch sizes available on request.

Standard duty flanged units cast housing eccentric locking collar type

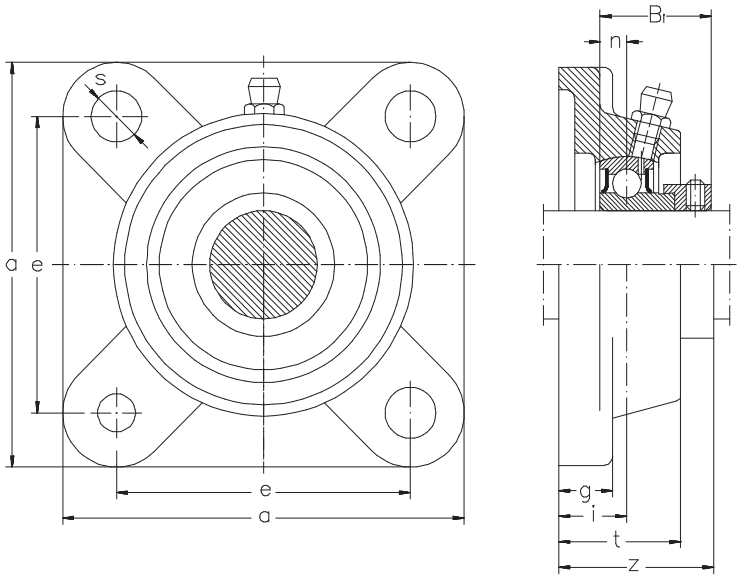

Shaft dia.	Nominal dimensions a	e	i	g	t	s	z	Bi	n	Bolt size	Unit number	Bearing number	Housing number	Weight
mm											—			kg
20	86	64	15	12	25,5	12	37,5	29,5	7,0	**M10**	**SAF 204**	**SA 204**	**F 204**	0,54
25	95	70	16	13	27,0	12	39,0	30,5	7,5	**M10**	**SAF 205**	**SA 205**	**F 205**	0,73
30	108	83	18	13	31,0	12	43,9	33,9	8,0	**M10**	**SAF 206**	**SA 206**	**F 206**	1,06
35	117	92	19	15	34,0	14	48,0	37,5	8,5	**M12**	**SAF 207**	**SA 207**	**F 207**	1,37
40	130	102	21	15	36,0	16	52,0	40,5	9,5	**M14**	**SAF 208**	**SA 208**	**F 208**	1,78
45	137	105	22	16	38,0	16	54,2	42,2	10,0	**M14**	**SAF 209**	**SA 209**	**F 209**	2,06
50	143	111	22	16	40,0	16	55,2	43,7	10,5	**M14**	**SAF 210**	**SA 210**	**F 210**	2,35
55	162	130	25	18	43,0	19	61,9	48,4	11,5	**M16**	**SAF 211**	**SA 211**	**F 211**	2,75

Note: Inch sizes available on request.

Standard duty flanged units cast housing eccentric locking collar type

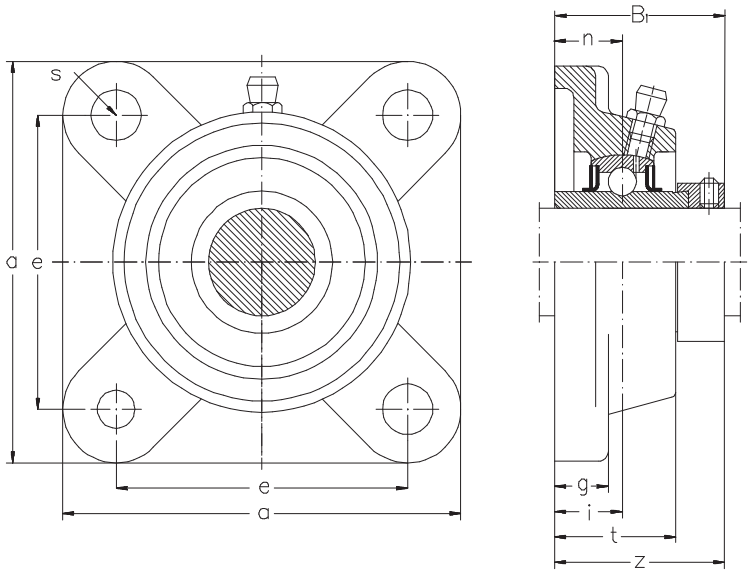

Shaft dia.	Nominal dimensions a	e	i	g	t	s	z	Bi	n	Bolt size	Unit number	Bearing number	Housing number	Weight
mm											—			kg
20	86	63,5	19	15	29,5	11,5	45,5	43,5	17	M10	**UELFS 204**	**UEL 204**	**FS 204**	0,68
25	93	70	19	15	30	11,5	45,9	44,3	17,4	M10	**UELFS 205**	**UEL 205**	**FS 205**	0,80
30	106	82,5	20	16	32,5	13,0	50,1	48,3	18,2	M12	**UELFS 206**	**UEL 206**	**FS 206**	1,10
35	116	92	21	17	35	13	53,3	51,1	18,8	M12	**UELFS 207**	**UEL 207**	**FS 207**	1,47
40	129	101,5	24	17	39	14	58,9	56,3	21,4	M12	**UELFS 208**	**UEL 208**	**FS 208**	1,88
45	135	105	24	18	40	16	58,9	56,3	21,4	M14	**UELFS 209**	**UEL 209**	**FS 209**	2,15
50	143	111	28	20	45	16	66,1	62,7	24,6	M14	**UELFS 210**	**UEL 210**	**FS 210**	2,64
55	162	130	31	21	49	17	74,6	71,3	27,7	M14	**UELFS 211**	**UEL 211**	**FS 211**	3,70
60	175	143	34	22	53,5	17	80,8	77,7	30,9	M14	**UELFS 212**	**UEL 212**	**FS 212**	4,58
65	184	149	38	22	58	18	89,6	85,7	34,1	M16	**UELFS 213**	**UEL 213**	**FS 213**	5,66
70	188	152	38	23	60	18	89,6	85,7	34,1	M16	**UELFS 214**	**UEL 214**	**FS 214**	5,82
75	200	152,4	41	24	62	20	95,8	92,1	37,3	M16	**UELFS 215**	**UEL 215**	**FS 215**	7,01

Note: Inch sizes available on request.

Standard duty flanged units cast housing eccentric locking collar type

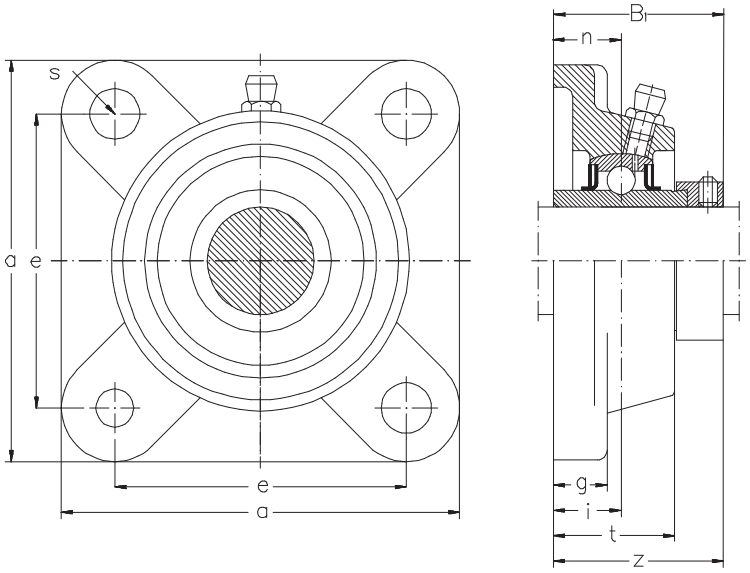

Shaft dia.	Nominal dimensions a	e	i	g	t	s	z	Bi	n	Bolt size	Unit number	Bearing number	Housing number	Weight
mm											—			kg
12	86	64	15	12	25,5	12	41,5	43,5	17	M10	**UELF 201**	**UEL 201**	**F 204**	0,63
15	86	64	15	12	25,5	12	41,5	43,5	17	M10	**UELF 202**	**UEL 202**	**F 204**	0,61
17	86	64	15	12	25,5	12	41,5	43,5	17	M10	**UELF 203**	**UEL 203**	**F 204**	0,60
20	86	64	15	12	25,5	12	41,5	43,5	17	M10	**UELF 204**	**UEL 204**	**F 204**	0,58
25	95	70	16	13	27	12	42,9	44,3	17,4	M10	**UELF 205**	**UEL 205**	**F 205**	0,78
30	108	83	18	13	31	12	48,1	48,3	18,2	M10	**UELF 206**	**UEL 206**	**F 206**	1,14
35	117	92	19	15	34	14	51,3	51,1	18,8	M12	**UELF 207**	**UEL 207**	**F 207**	1,47
40	130	102	21	15	36	16	55,9	56,3	21,4	M14	**UELF 208**	**UEL 208**	**F 208**	1,91
45	137	105	22	16	38	16	56,9	56,3	21,4	M14	**UELF 209**	**UEL 209**	F 209	2,22
50	143	111	22	16	40	16	60,1	62,7	24,6	M14	**UELF 210**	**UEL 210**	F 210	2,56
55	162	130	25	18	43	19	68,6	71,3	27,7	M16	**UELF 211**	**UEL 211**	F 211	3,27
60	175	143	29	18	48	19	75,8	77,7	30,9	M16	**UELF 212**	**UEL 212**	F 212	3,91
65	187	149	30	22	50	19	81,6	85,7	34,1	M16	**UELF 213**	**UEL 213**	F 213	5,47
70	193	152	31	22	54	19	82,6	85,7	34,1	M16	**UELF 214**	**UEL 214**	F 214	6,14
75	200	159	34	22	56	19	88,8	92,1	37,3	M16	**UELF 215**	**UEL 215**	F 215	6,18

Note: Inch sizes available on request.

Standard duty flanged units cast housing adapter type

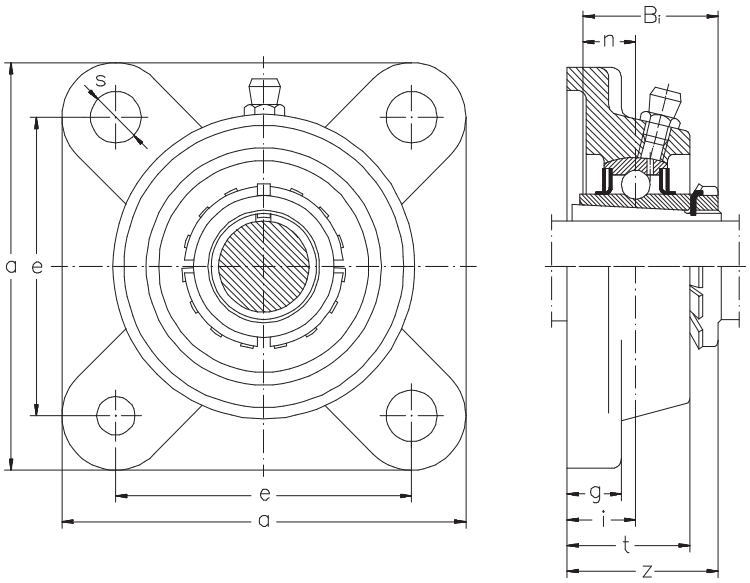

Shaft dia.	Nominal dimensions a	e	i	g	t	s	z	Bi	Bolt size	Unit number	Bearing number	Housing number	Weight
mm										—			kg
20	95	70	16	13	27	12	35,5	35	M10	**UKF 205**	**UK 205**	**F 205**	0,68
25	108	83	18	13	31	12	39,0	38	M10	**UKF 206**	**UK 206**	**F 206**	0,98
30	117	92	19	15	34	14	42,5	43	M12	**UKF 207**	**UK 207**	**F 207**	1,24
35	130	102	21	15	36	16	46,5	46	M14	**UKF 208**	**UK 208**	**F 208**	1,61
40	137	105	22	16	38	16	48,5	50	M14	**UKF 209**	**UK 209**	**F 209**	1,90
45	143	111	22	16	40	16	50,0	55	M14	**UKF 210**	**UK 210**	**F 210**	2,14
50	162	130	25	18	43	19	54,5	59	M16	**UKF 211**	**UK 211**	**F 211**	2,65
55	175	143	29	18	48	19	61,0	62	M16	**UKF 212**	**UK 212**	**F 212**	3,07
60	187	149	30	22	50	19	64,0	65	M16	**UKF 213**	**UK 213**	**F 213**	4,42

Medium duty flanged units cast housing set screws type

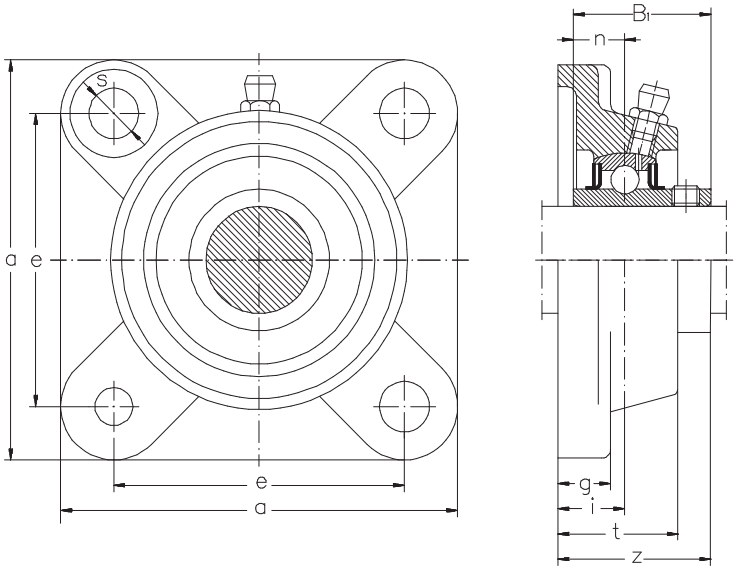

Shaft dia.	Nominal dimensions a	e	i	g	t	s	z	Bi	n	Bolt size	Unit number	Bearing number	Housing number	Weight
mm											—			kg
25	108	82,5	18	13	30	12	40,2	38,1	15,9	M10	**UCF X05**	**UC X05**	**F X05**	1,15
30	117	92,0	19	14	34	16	44,4	42,9	17,5	M14	**UCF X06**	**UC X06**	**F X06**	1,50
35	130	101,5	21	14	38	16	51,2	49,2	19,0	M14	**UCF X07**	**UC X07**	**F X07**	1,97
40	137	105,0	22	14	40	19	52,2	49,2	19,0	M16	**UCF X08**	**UC X08**	**F X08**	2,18
45	143	111,0	23	14	40	19	55,6	51,6	19,0	M16	**UCF X09**	**UC X09**	**F X09**	2,37
50	162	130,0	26	20	44	19	59,4	55,6	22,2	M16	**UCF X10**	**UC X10**	**F X10**	3,47
55	175	143,0	29	20	49	19	68,7	65,1	25,4	M16	**UCF X11**	**UC X11**	**F X11**	4,13
60	187	149	34	21	59	19	73,7	65,1	25,4	M16	**UCF X12**	**UC X12**	**F X12**	5,70
65	187	149	34	21	59	19	78,4	74,6	30,2	M18	**UCF X13**	**UC X13**	**F X13**	5,77
70	197	152	37	24	60	23	81,5	77,8	33,3	M20	**UCF X14**	**UC X14**	**F X14**	6,79
75	197	152	40	24	68	23	89,3	82,6	33,3	M20	**UCF X15**	**UC X15**	**F X15**	7,66
80	214	171	40	24	70	23	91,6	85,7	34,1	M20	**UCF X16**	**UC X16**	**F X16**	9,99

Note: Inch sizes available on request.

Heavy duty flanged units cast housing set screws type

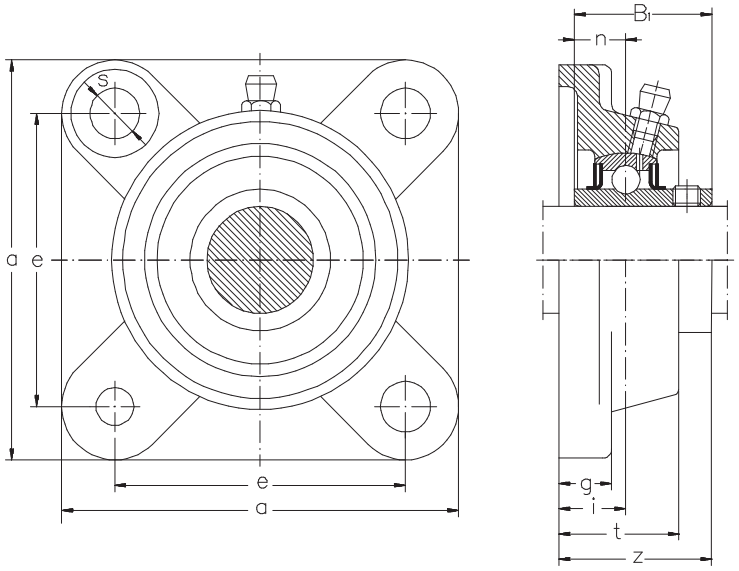

Shaft dia.	Nominal dimensions a	e	i	g	t	s	z	Bi	Bolt n	Unit size	
mm											
25	108	80	16	13	29	16	39	38	15	M14	**UC**
30	125	95	18	15	32	16	44	43	17	M14	**UC**
35	135	100	20	16	36	19	49	48	19	M16	**UC**
40	150	112	23	17	40	19	56	52	19	M16	**UC**
45	160	125	25	18	44	19	60	57	22	m16	**UC**
50	175	132	28	20	48	23	67	61	22	M20	**UC**
55	185	140	30	20	52	23	71	66	25	M20	**UC**
60	193	150	33	22	56	23	78	71	26	M20	**UC**
65	208	166	33	22	58	23	78	75	30	M20	**UC**
70	226	178	36	25	61	25	81	78	33	M22	**UC**
75	236	184	39	25	66	25	89	82	32	M22	**UC**
80	250	196	38	27	68	31	90	86	34	M27	**UC**

Note: Inch sizes available on request.

Standard duty two bolts flanged units pressed steel housing set screws type

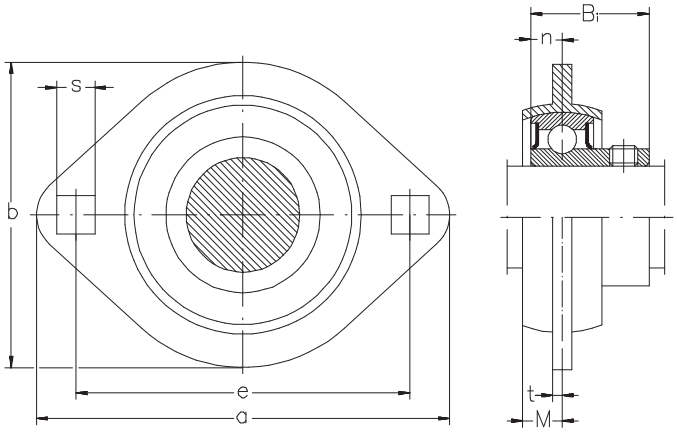

Shaft dia.	Nominal dimensions a	e	M	t	s	b	Bi	Bolt n	Unit size	Bearing number
mm										—
12	81	63,5	7,0	2,0	7,1	59	22	6	M6	**SBPFL 201 SB**
15	81	63,5	7,0	2,0	7,1	59	22	6	M6	**SBPFL 202 SB**
17	81	63,5	7,0	2,0	7,1	59	22	6	M6	**SBPFL 203 SB**
20	90	71,5	8,0	2,0	9	67	25	7	M8	**SBPFL 204 SB**
25	95	76,0	9,0	2,0	9	71	27	7,5	M8	**SBPFL 205 SB**
30	113	90,5	9,5	2,6	11	84	29	8	M10	**SBPFL 206 SB**
35	122	100	11	2,6	11	94	32	8,5	M10	**SBPFL 207 SB**

Note: Inch sizes available on request.

Standard duty two bolts flanged units cast housing set screws type

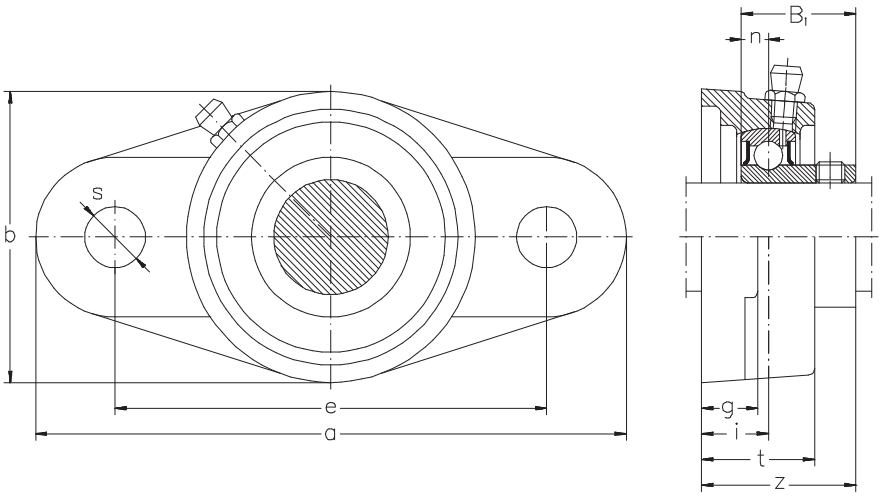

Shaft dia.	Nominal dimensions a	e	i	g	t	s	b	z	Bi	Bolt n	
mm											
20	112,5	90	19	15	29,5	10	61	37	25	7	M8
25	123	99	19	15	30	11,5	70	38,5	27	7,5	M1
30	142	116,5	20	16	32,5	11,5	82	41	29	8	M1
35	158	130	21	17	36	13	94	44,5	32	8,5	M1
40	172	143,5	24	17	39	13	103	48,5	34	9,5	M1

Note: Inch sizes available on request.

Standard duty two bolts flanged units cast housing set screws type

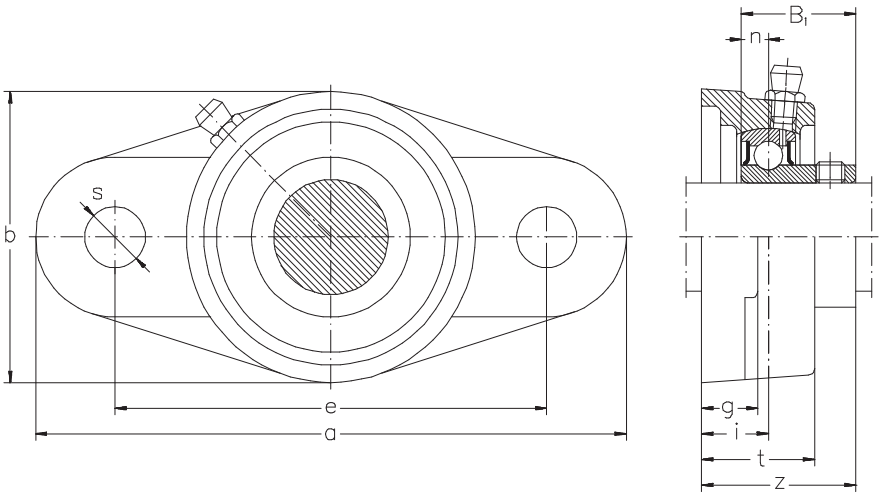

Shaft dia.	Nominal dimensions a	e	i	g	t	s	b	z	Bi	Bolt n	
mm											
20	113	90	15	11	25,5	12	60	33	25	7	M1
25	130	99	16	13	27	16	68	35,5	27	7,5	M1
30	148	117	18	13	31	16	80	39	29	8	M1
35	161	130	19	14	34	16	90	42,5	32	8,5	M1
40	175	144	21	14	36	16	100	45,5	34	9,5	M1

Note: Inch sizes available on request.

Standard duty two bolts flanged units cast housing set screws type

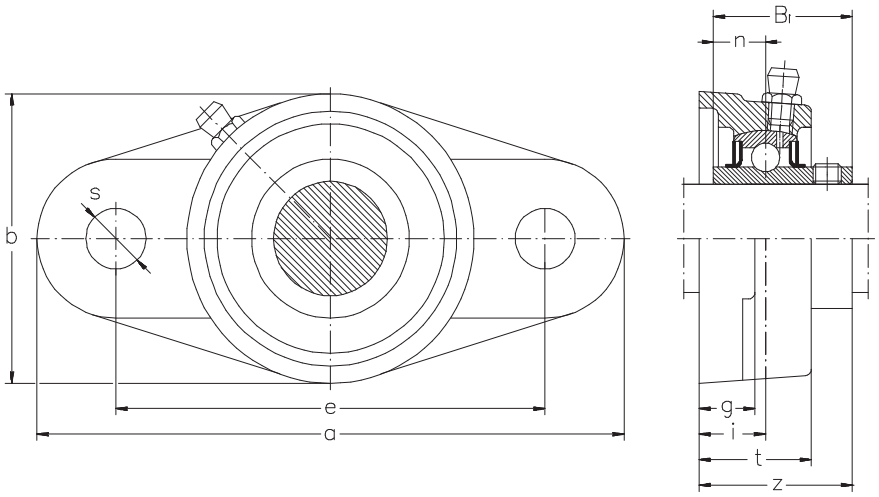

Shaft dia.	Nominal dimensions a	e	i	g	t	s	b	z	Bi	Bolt n	
mm											
20	112,5	90	19	15	29,5	10	61	37,3	31	12,7	M8
25	123	99	19	15	30	11,5	70	38,7	34	14,3	M1
30	142	116,5	20	16	32,5	11,5	82	42,2	38,1	15,9	M1
35	158	130	21	17	36	13	94	46,4	42,9	17,5	M1
40	172	143,5	24	17	39	13	103	54,2	49,2	19	M1
45	180	148,5	24	18	40	15	108	54,2	49,2	19	M1
50	190	157	28	20	45	15	114	60,6	51,6	19	M1
55	217	184	31	21	48	16,5	128	64,4	55,6	22,2	M1
60	237	202	34	21	53	16,5	138	73,7	65,1	25,4	M1
65	256	210	38	22	56	21	152	77,7	65,1	25,4	M2
70	264	216	38	23	58	21	157	82,4	74,6	30,2	M2

Note: Inch sizes available on request.

Standard duty two bolts flanged units cast housing set screws type

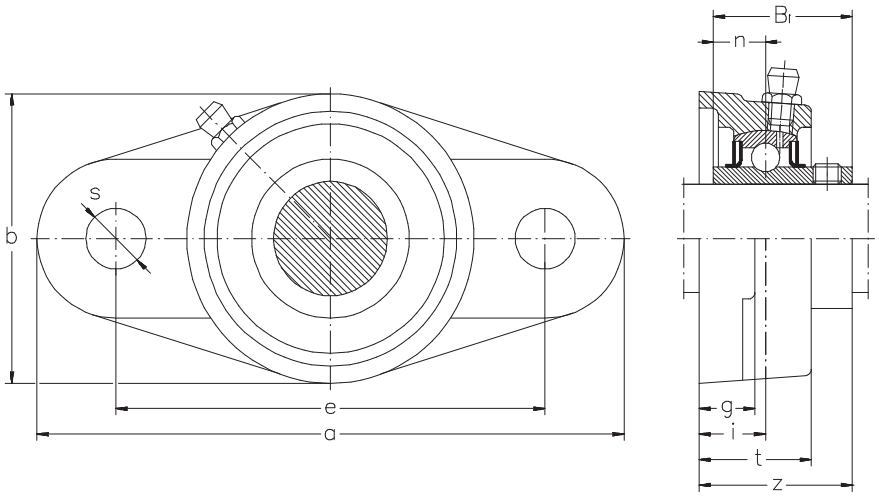

Shaft dia.	Nominal dimensions									Bolt	
mm	a	e	i	g	t	s	b	z	Bi	n	
12	113	90	15	11	25,5	12	60	33,3	31	12,7	M1
15	113	90	15	11	25,5	12	60	33,3	31	12,7	M1
17	113	90	15	11	25,5	12	60	33,3	31	12,7	M1
20	113	90	15	11	25,5	12	60	33,3	31	12,7	M1
25	130	99	16	13	27	16	68	35,7	34	14,3	M1
30	148	117	18	13	31	16	80	40,2	38,1	15,9	M1
35	161	130	19	14	34	16	90	44,4	42,9	17,5	M1
40	175	144	21	14	36	16	100	51,2	49,2	19	M1
45	188	148	22	16	38	19	108	52,2	49,2	19	M1
50	197	157	22	16	40	19	115	54,6	51,6	19	M1
55	224	184	25	18	43	19	130	58,4	55,6	22,2	M1
60	250	202	29	18	48	23	140	68,7	65,1	25,4	M2
65	258	210	30	20	50	23	155	69,7	65,1	25,4	M2
70	265	216	31	20	54	23	160	75,4	74,6	30,2	M2
75	275	225	34	20	56	23	165	78,5	77,8	33,3	M2
80	290	233	34	22	58	25	180	83,3	82,6	33,3	M2
85	305	248	36	22	63	25	190	87,6	85,7	34,1	M2
90	320	265	40	23	68	25	205	96,3	96	39,7	M2

Note: Inch sizes available on request.

Standard duty flanged units cast housing special type set screws type

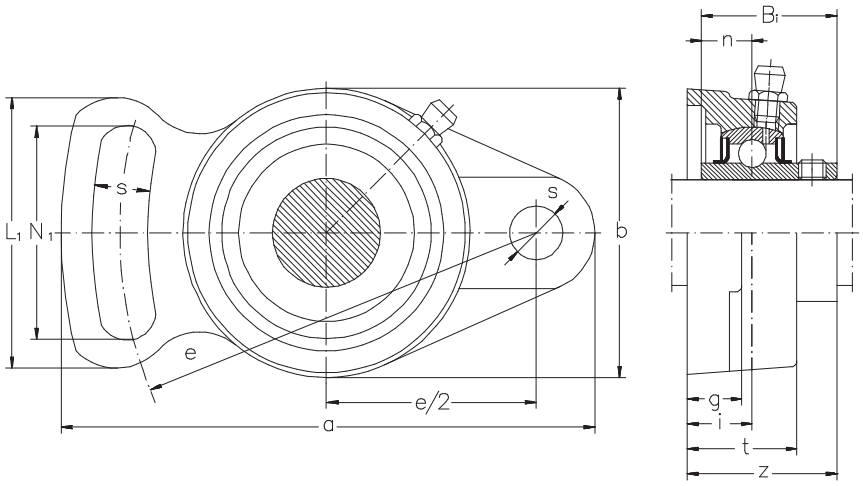

Shaf dia.	Nominal dimensions a	e	i	g	t	s	N_1	b	L_1	z	
mm											
12	102	78	15	12	25,5	10	40	60	54	33,3	31
15	102	78	15	12	25,5	10	40	60	54	33,3	31
17	102	78	15	12	25,5	10	40	60	54	33,3	31
20	102	78	15	12	25,5	10	40	60	54	33,3	31
25	125	98	16	14	27	12	51	68	65	34,7	34
30	144	117	18	14	31	12	58	80	72	40,2	38,
35	161	130	19	16	34	14	66	90	82	45,4	42,
40	175	144	21	16	36	14	71	100	87	52,2	49,
45	178	146	22	16	38	16	72	108	88	52,2	49,
50	188	155	22	16	39	16	75	114	92	54,6	51,
55	216	182	25	18	42,5	16	84	128	102	58,4	55,
60	238	202	29	19	47,5	18	104	140	122	68,7	65,
65	248	210	30	20	49	18	106	152	126	69,7	65,

Note: Inch sizes available on request.

Standard duty flanged units cast housing special type set screws type

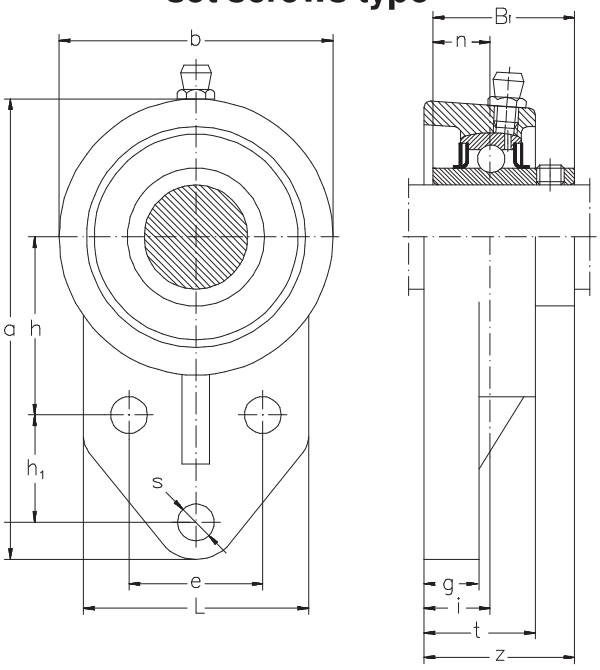

Shaft dia.	Nominal dimensions a	e	i	g	t	s	h	h_1	L	b	
mm											
12	109	32	15	11	25,5	10	42	27	52	60	33,
15	109	32	15	11	25,5	10	42	27	52	60	33,
17	109	32	15	11	25,5	10	42	27	52	60	33,
20	109	32	15	11	25,5	10	42	27	52	60	33,
25	116	34	16	13	27	10	45	27	56	68	35,
30	132	40	18	13	31	10	50	29	65	80	40,
35	144	46	19	14	33	10	55	32	70	90	44,
40	164	50	21	16	35	12	60	41	78	100	51,
45	175	54	22	16	38	12	65	43	80	108	52,
50	184	58	22	16	39	12	68	46	86	114	54,
55	207	62	25	18	42,5	14	78	50	90	128	58,
60	224	66	29	19	47,5	14	84	55	94	140	68,
65	244	70	30	20	49	14	92	60	102	152	69,

Note: Inch sizes available on request.

Standard duty two bolts flanged units pressed steel housing eccentric locking collar type

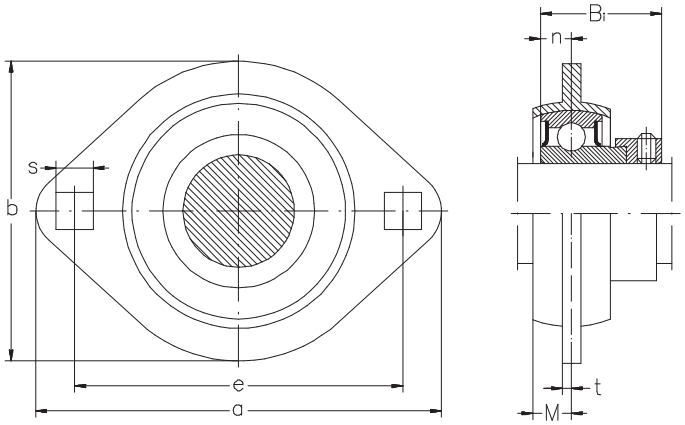

Shaft dia.	Nominal dimensions a	e	M	t	s	b	Bi	Bolt n	Unit size	number
mm										—
12	81	63,5	7	2	7,1	59	28,5	6	M6	**SAPFL 201 SA**
15	81	63,5	7	2	7,1	59	28,5	6	M6	**SAPFL 202 SA**
17	81	63,5	7	2	7,1	59	28,5	6	M6	**SAPFL 203 SA**
20	90	71,5	8	2	9	67	29,5	7	M8	**SAPFL 204 SA**
25	95	76	9	2	9	71	30,5	7,5	M8	**SAPFL 205 SA**
30	113	90,5	9,5	2,6	11	84	33,9	8	M10	**SAPFL 206 SA**
35	122	100	11	2,6	11	94	37,5	8,5	M10	**SAPFL 207 SA**

Note: Inch sizes available on request.

Standard duty two bolts flanged units cast housing eccentric locking collar type

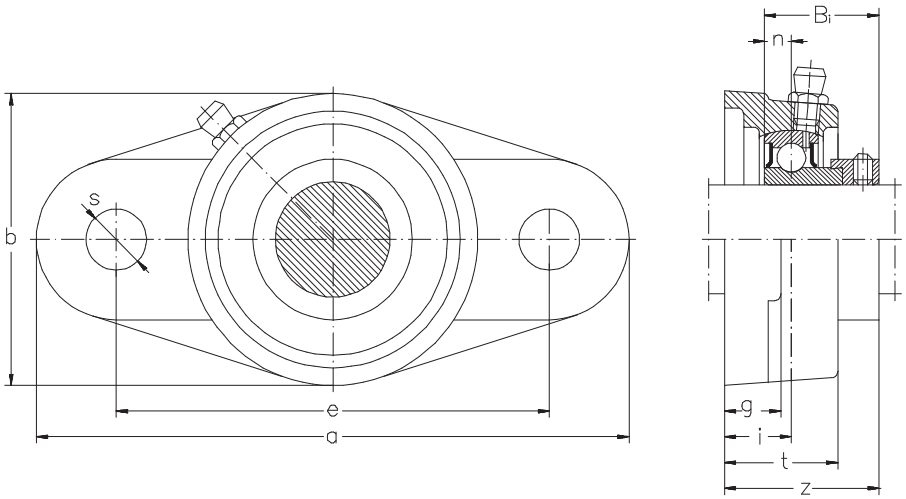

Shaft dia.	Nominal dimensions a	e	i	g	t	s	b	z	Bi	Bolt n	
mm											
20	112,5	90	19	15	29,5	10	61	41,5	29,5	7	M8
25	123	99	19	15	30	11,5	70	42	30,5	7,5	M1
30	142	116,5	20	16	32,5	11,5	82	45,9	33,0	8	M1
35	158	130	21	17	36	13	94	50	37,5	8,5	M1
40	172	143,5	24	17	39	13	103	55	40,5	9,5	M1
45	180	148,5	24	18	40	15	108	56,2	42,2	10	M1
50	190	157	28	20	45	15	114	61,2	43,7	10,5	M1
55	217	184	31	21	48	16,5	128	67,9	48,4	11,5	M1

Note: Inch sizes available on request.

Standard duty two bolts flanged units cast housing eccentric locking collar type

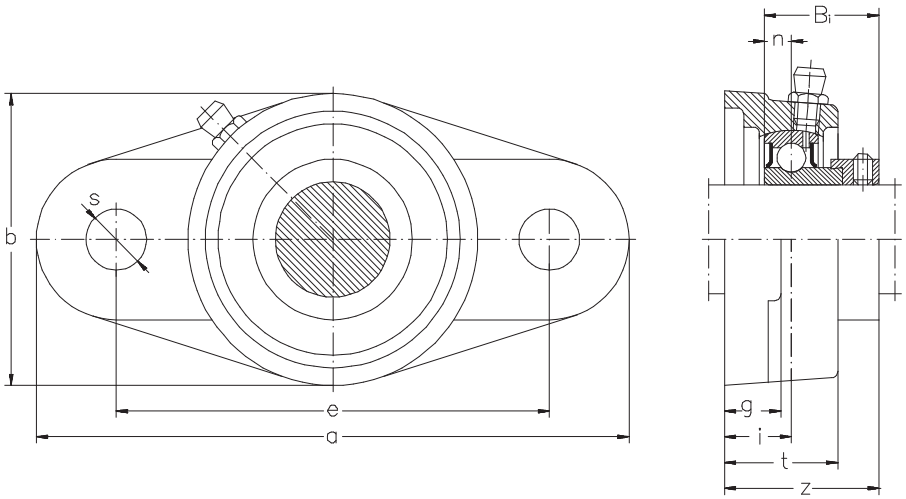

Shaft dia.	Nominal dimensions a	e	i	g	t	s	b	z	Bi	Bolt n	
mm											
20	113	90	15	11	25,5	12	60	37,5	29,5	7	M1
25	130	99	16	13	27	16	68	39	30,5	7,5	M1
30	148	117	18	13	31	16	80	43,9	33,9	8	M1
35	161	130	19	14	34	16	90	48	37,5	8,5	m1
40	175	144	21	14	36	16	100	52	40,5	9,5	M1
45	188	148	22	16	38	19	108	54,2	42,2	10	M1
50	197	157	22	16	40	19	115	55,2	43,7	10,5	M1
55	224	184	25	18	43	19	130	61,9	48,4	11,5	M1

Note: Inch sizes available on request.

Standard duty two bolts flanged units cast housing eccentric locking collar type

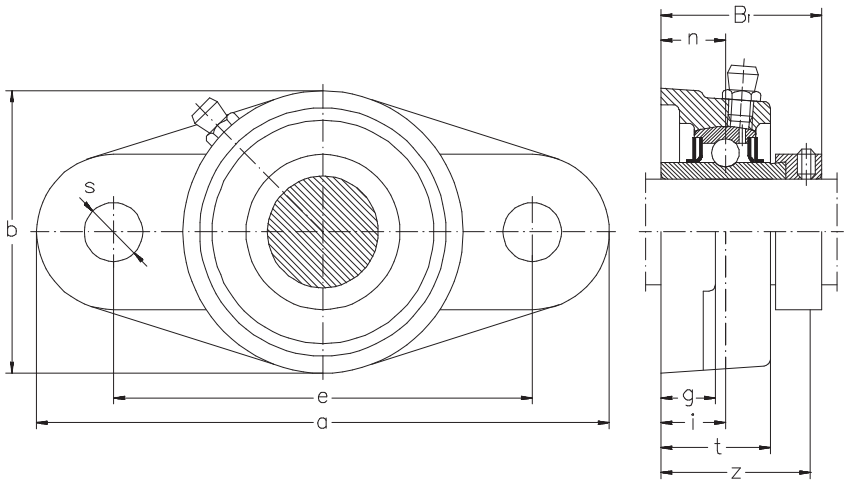

Shaft dia.	Nominal dimensions a	e	i	g	t	s	b	z	Bi	n	Bolt
mm											
20	112,5	90	19	15	29,5	10	61	45,5	43,5	17	M8
25	123	99	19	15	30	11,5	70	45,9	44,3	17,4	M1
30	142	116,5	20	16	32,5	11,5	82	50,1	48,3	18,2	M1
35	158	130	21	17	36	13	94	53,3	51,1	18,8	M1
40	172	143,5	24	17	39	13	103	58,9	56,3	21,4	M1
45	180	148,5	24	18	40	15	108	58,9	56,3	21,4	M1
50	190	157	28	20	45	15	114	66,1	62,7	24,6	M1
55	217	184	31	21	48	16,5	128	74,6	71,3	27,7	M1
60	237	202	34	21	53	16,5	138	80,8	77,7	30,9	M1
65	256	210	38	22	56	21	152	89,6	85,7	34,1	M2
70	264	216	38	23	58	21	157	89,6	85,7	34,1	M2

Note: Inch sizes available on request.

Standard duty two bolts flanged units cast housing eccentric locking collar type

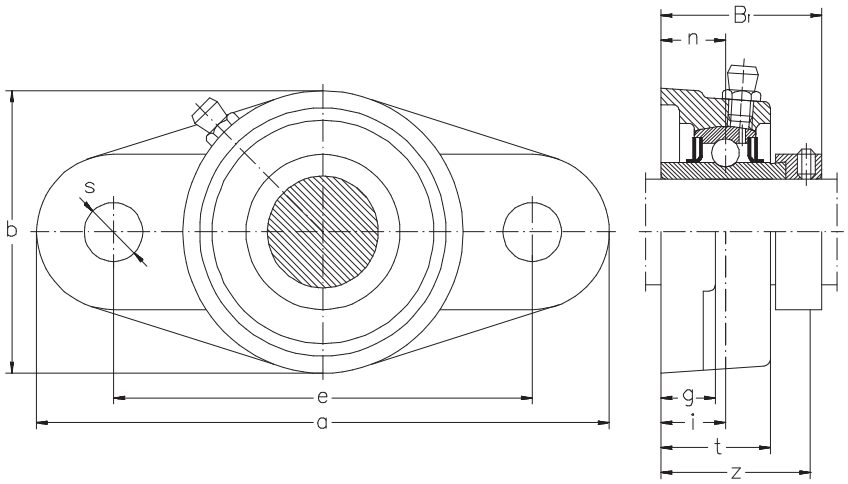

Shaft dia.	Nominal dimensions a	e	i	g	t	s	b	z	Bi	Bolt n	
mm											
12	113	90	15	11	25,5	60	12	41,5	43,5	17	M1
15	113	90	15	11	25,5	60	12	41,5	43,5	17	M1
17	113	90	15	11	25,5	60	12	41,5	43,5	17	M1
20	113	90	15	11	25,5	60	12	41,5	43,5	17	M1
25	130	99	16	13	27	68	16	42,9	44,3	17,4	M1
30	148	117	18	13	31	80	16	48,1	48,3	18,2	M1
35	161	130	19	14	34	90	16	51,3	51,1	18,8	M1
40	175	144	21	14	36	100	16	55,9	56,3	21,4	M1
45	188	148	22	16	38	108	19	56,9	56,3	21,4	M1
50	197	157	22	16	40	115	19	60,1	62,7	24,6	M1
55	224	184	25	18	43	130	19	68,6	71,3	27,7	M1
60	250	202	29	18	48	140	23	75,8	77,3	30,9	M2
65	258	210	30	20	50	155	23	81,6	85,7	34,1	M2
70	265	216	31	20	54	160	23	82,6	85,7	34,1	M2
75	275	225	34	20	56	165	23	88,8	92,1	37,3	M2

Note: Inch sizes available on request.

Standard duty two bolts flanged units cast housing adapter type

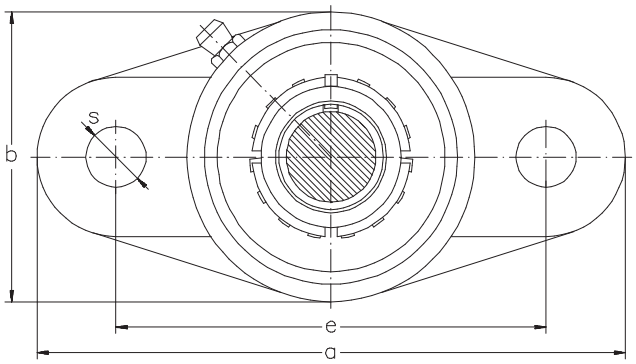

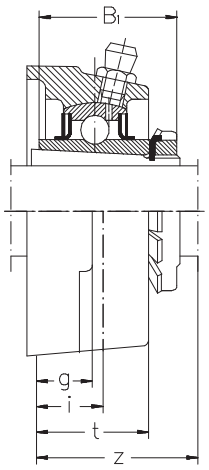

Shaft dia.	Nominal dimensions a	e	i	g	t	b	s	z	Bolt Bi	Unit size	
mm											
20	130	99	16	13	27	68	16	35,5	35	M14	**UK**
25	148	117	18	13	31	80	16	39	38	M14	**UK**
30	161	130	19	14	34	90	16	42,5	43	M14	**UK**
35	175	144	21	14	36	100	16	46,5	46	M14	**UK**
40	188	148	22	16	38	108	19	48,5	50	M16	**UK**
45	197	157	22	16	40	115	19	50	55	M16	**UK**
50	224	184	25	18	43	130	19	54,5	59	M16	**UK**
55	250	202	29	18	48	140	23	61	62	M20	**UK**
60	258	210	30	20	50	155	23	64	65	M20	**UK**

Medium duty two bolts flanged units cast housing set screws type

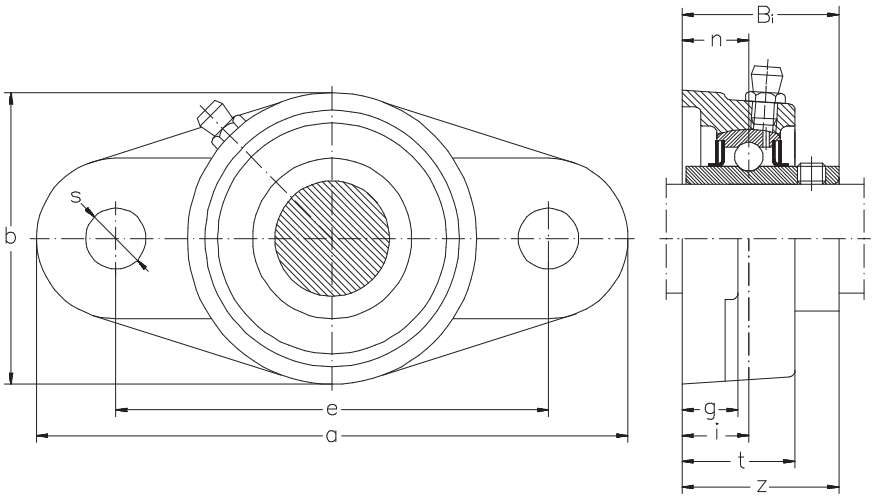

Shaft dia.	Nominal dimensions a	e	i	g	t	b	s	z	Bi	Bolt n	
mm											
25	141	117	18	13	30	83	12	40,2	38,1	15,9	M1
30	156	130	19	15	34	95	16	44,4	42,9	17,5	M1
35	171	144	22	16	38	105	16	51,2	49,2	19	M1
40	179	148	22	16	40	111	16	52,2	49,2	19	M1
45	189	157	23	16	40	116	16	55,6	51,6	19	M1
50	216	184	26	18	44	133	19	59,4	55,6	22,2	M1

Note: Inch sizes available on request.

Heavy duty two bolts flanged units cast housing set screws type

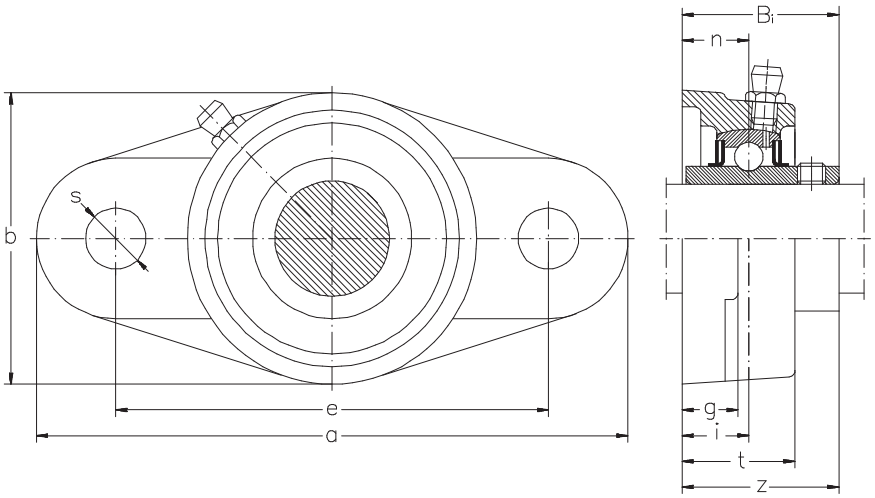

Shaft dia.	Nominal dimensions									Bolt	
mm	a	e	i	g	t	b	s	z	Bi	n	
25	150	113	16	13	29	80	19	39	38	15	M1
30	180	134	18	15	32	90	23	44	43	17	M2
35	185	141	20	16	36	100	23	49	48	19	M2
40	200	158	23	17	40	112	23	56	52	19	M2
45	230	177	25	18	44	125	25	60	57	22	M2
50	240	187	28	19	48	140	25	67	61	22	M2
55	250	198	30	20	52	150	25	71	66	25	M2
60	270	212	33	22	56	160	31	78	71	26	M2
65	295	240	33	25	58	175	31	78	75	30	M2
70	315	250	36	28	61	185	35	81	78	33	M3
75	320	260	39	30	66	195	35	89	82	32	M3
80	355	285	38	32	68	210	38	90	86	34	M3

Note: Inch sizes available on request.

Standard duty flanged cartridge units pressed steel housing set screws type

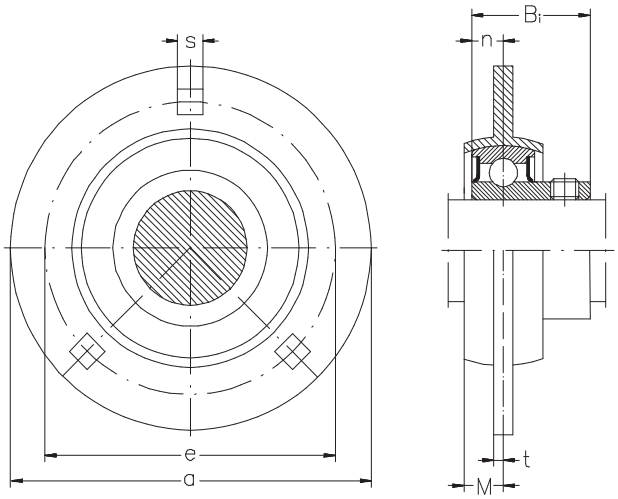

Shaft dia.	Nominal dimensions a	e	t	s	M	Bi	Bolt n	Unit size	number	Bearing numbei	
mm									—		
12	81	63,5	2	7,1	7	22	6	M6	**SBPF 201**	**SB 201**	**PF**
15	81	63,5	2	7,1	7	22	6	M6	**SBPF 202**	**SB 202**	**PF**
17	81	63,5	2	7,1	7	22	6	M6	**SBPF 203**	**SB 203**	**PF**
20	90	71,5	2	9	8	25	7	M8	**SBPF 204**	**SB 204**	**PF**
25	95	76	2	9	9	27	7,5	M8	**SBPF 205**	**SB 205**	**PF**
30	113	90,5	2,6	11	9,5	29	8	M10	**SBPF 206**	**SB 206**	**PF**
35	122	100	2,6	11	11	32	8,5	M10	**SBPF 207**	**SB 207**	**PF**

Note: Inch sizes available on request.

Standard duty flanged cartridge units cast housing set screws type

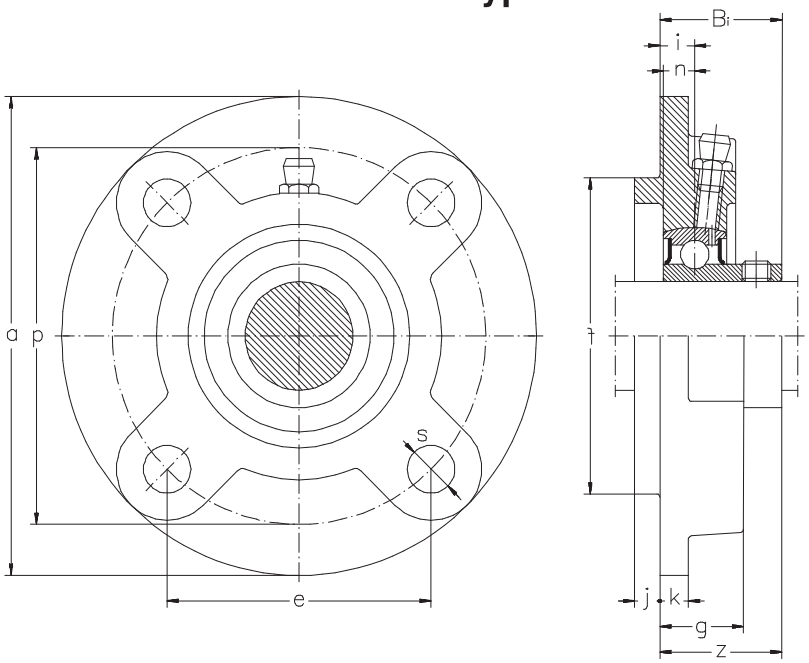

Shaft dia.	Nominal dimensions a	p	e	i	s	j	k	g	f	z	
mm											
20	100	78	55,1	10	12	5	6	20,5	62	28	25
25	115	90	63,6	10	12	6	7	21	70	29,5	27
30	125	100	70,7	10	12	8	8	23	80	31	29
35	135	110	77,8	11	14	8	9	26	90	34,5	32
40	145	120	84,8	11	14	10	9	26	100	35,5	34

Note: Inch sizes available on request.

Standard duty flanged cartridge units cast housing set screws type

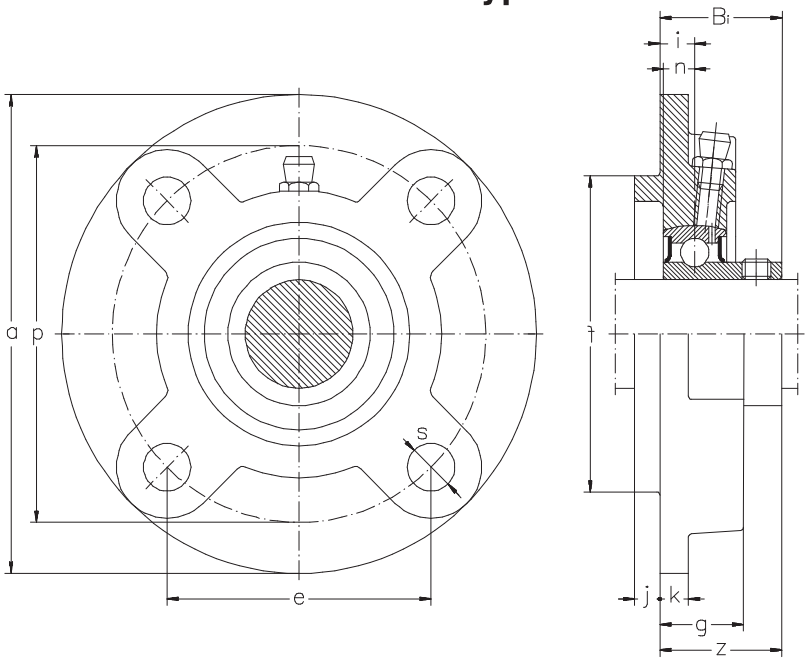

Shaft dia.	Nominal dimensions a	p	e	i	s	j	k	g	f	z	
mm											
12	100	78	55,1	10	12	5	6	20,5	62	28,3	31
15	100	78	55,1	10	12	5	6	20,5	62	28,3	31
17	100	78	55,1	10	12	5	6	20,5	62	28,3	31
20	100	78	55,1	10	12	5	6	20,5	62	28,3	31
25	115	90	63,6	10	12	6	7	21	70	29,7	34
30	125	100	70,7	10	12	8	8	23	80	32,2	38,
35	135	110	77,8	11	14	8	9	26	90	36,4	42,
40	145	120	84,8	11	14	10	9	26	100	41,2	49,
45	160	132	93,3	10	16	12	10	26	105	40,2	49,
50	165	138	97,6	10	16	12	14	28	110	42,6	51,
55	185	150	106,1	13	19	12	13	30	125	46,4	55,
60	195	160	113,1	17	19	12	15	36	135	56,7	65,
65	205	170	120,2	16	19	14	15	35	145	55,7	65,
70	215	177	125,1	17	19	14	16	38	150	61,4	74,
75	220	184	130,1	18	19	16	17	39	160	62,5	77,
80	240	200	141,4	18	23	16	18	42	170	67,3	82,
85	250	208	147,1	18	23	18	20	45	180	69,6	85,
90	265	220	155,5	22	23	20	18	50	190	78,3	96

Standard duty flanged cartridge units pressed steel housing set screws type

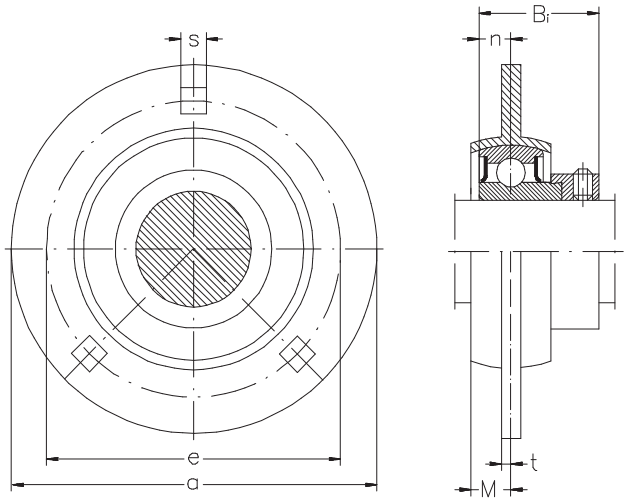

Shaft dia.	Nominal dimensions a	e	t	s	M	Bi	Bolt n	Unit size	number	Bearing number	
mm									—		
12	81	63,5	2	7,1	7	28,5	6	M6	**SAPF 201**	**SA 201**	**PF**
15	81	63,5	2	7,1	7	28,5	6	M6	**SAPF 202**	**SA 202**	**PF**
17	81	63,5	2	7,1	7	28,5	6	M6	**SAPF 203**	**SA 203**	**PF**
20	90	71,5	2	9	8	29,5	7	M8	**SAPF 204**	**SA 204**	**PF**
25	95	76	2	9	9	30,5	7,5	M8	**SAPF 205**	**SA 205**	**PF**
30	113	90,5	2,6	11	9,5	33,9	8	M10	**SAPF 206**	**SA 206**	**PF**
35	122	100	2,6	11	11	37,5	8,5	M10	**SAPF 207**	**SA 207**	**PF**

Note: Inch sizes available on request.

Standard duty flanged cartridge units cast housing eccentric locking collar type

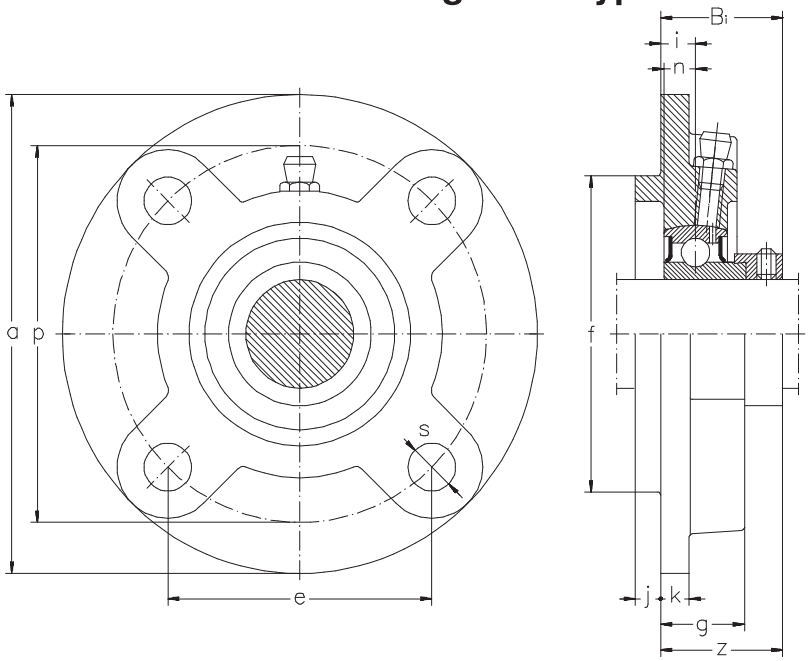

Shaft dia.	Nominal dimensions a	p	e	i	s	j	k	g	f	z	
mm											
20	100	78	55,1	10	12	5	6	20,5	62	32,5	29,
25	115	90	63,6	10	12	6	7	21	70	33	30,
30	125	100	70,7	10	12	8	8	23	80	35,9	33,
35	135	110	77,8	11	14	8	9	26	90	40	37,
40	145	120	84,8	11	14	10	9	26	100	42	40,
45	160	132	93,3	10	16	12	10	26	105	42,2	42,
50	165	138	97,6	10	16	12	14	28	110	43,2	43,
55	185	150	106,1	13	19	12	13	30	125	49,9	48,

Note: Inch sizes available on request.

Standard duty flanged cartridge units cast housing eccentric locking collar type

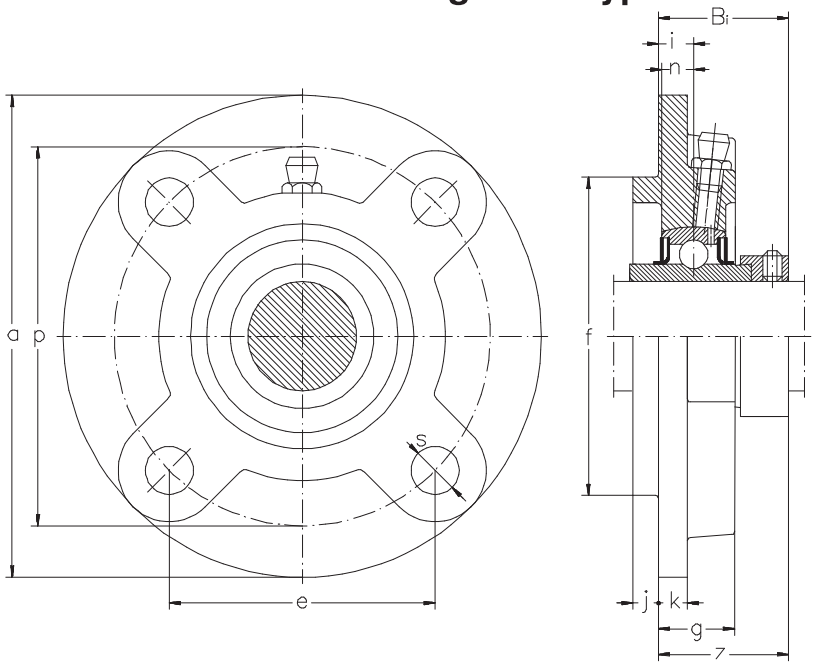

Shaft dia.	Nominal dimensions a	p	e	i	s	j	k	g	f	z	
mm											
12	100	78	55,1	10	12	5	6	20,5	62	36,5	43,
15	100	78	55,1	10	12	5	6	20,5	62	36,5	43,
17	100	78	55,1	10	12	5	6	20,5	62	36,5	43,
20	100	78	55,1	10	12	5	6	20,5	62	36,5	43,
25	115	90	63,6	10	12	6	7	21	70	36,9	44,
30	125	100	70,7	10	12	8	8	23	80	40,1	48,
35	135	110	77,8	11	14	8	9	26	90	43,3	51,
40	145	120	84,8	11	14	10	9	26	100	45,9	56,
45	160	132	93,3	10	16	12	10	26	105	44,9	56,
50	165	138	97,6	10	16	12	14	28	110	48,1	62,
55	185	150	106,1	13	19	12	13	30	125	56,6	71,
60	195	160	113,1	17	19	12	15	36	135	63,8	77,
65	205	170	120,2	16	19	14	15	35	145	67,6	5,
70	215	177	125,1	17	19	14	16	38	150	68,6	5,
75	220	184	130,1	18	19	16	17	39	160	72,8	92,

Note: Inch sizes available on request.

Standard duty flanged cartridge units cast housing adapter type

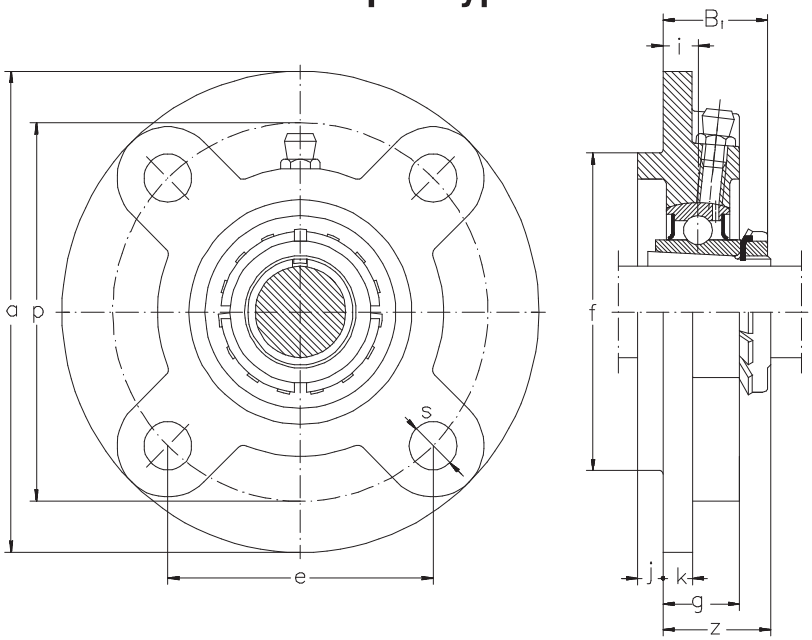

Shaft dia.	Nominal dimensions a	p	e	i	s	j	k	g	f	z	
mm											
20	115	90	63,6	10	12	6	7	21	70	29,5	35
25	125	100	70,7	10	12	8	8	23	80	31	38
30	135	110	77,8	11	14	8	9	26	90	34,5	43
35	145	120	84,8	11	14	10	9	26	100	36,5	46
40	160	132	93,3	10	16	12	10	26	105	36,5	50
45	165	138	97,6	10	16	12	14	28	110	38	55
50	185	150	106,1	13	19	12	13	30	125	42,5	59
55	195	160	113,1	17	19	12	15	36	135	49	62
60	205	170	120,2	16	19	14	15	35	145	50	65

Standard duty hanger units set screws type

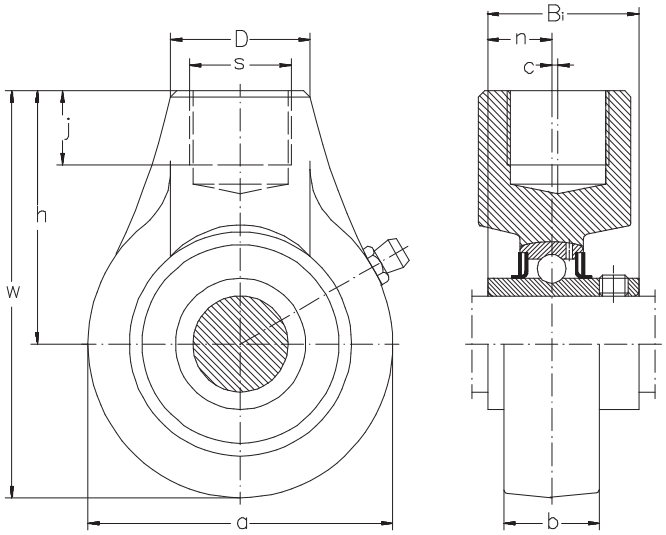

Shaft dia.	Nominal dimensions a	w	c	b	h	s		D	j	Bi	
mm											
12	64	96	0	22	64	RP 3/4	40	19	31	12,7	**UC**
15	64	96	0	22	64	RP 3/4	40	19	31	12,7	**UC**
17	64	96	0	22	64	RP 3/4	40	19	31	12,7	**UC**
20	64	96	0	22	64	RP 3/4	40	19	31	12,7	**UC**
25	78	103	0	23	64	RP 3/4	40	19	34	14,3	**UC**
30	78	103	0	25	64	RP 3/4	40	19	38,1	15,9	**UC**
35	92	116	0	26	70	RP 3/4	40	19	42,9	17,5	**UC**
40	96	121	2	30	73	RP 3/4	40	19	49,2	19	**UC**
45	108	136	5	30	82	RP 1	48	21	49,2	19	**UC**
50	115	140,5	5	32	83	RP 1	48	21	51,6	19	**UC**
55	126	150	7	33	87	RP 1-1/4	60	24	55,6	22,2	**UC**
60	142	173	9	36	102	RP 1-1/4	60	28	65,1	25,4	**UC**
65	166	200	9,5	38	117	RP 1-1/2	70	32	65,1	25,4	**UC**
70	166	200	9,5	40	117	RP 1-1/2	70	32	74,6	30,2	**UC**
75	166	200	9,5	40	117	RP 1-1/2	70	32	77,8	33,3	**UC**

Note: Inch sizes available on request.

Standard duty hanger units set screws type

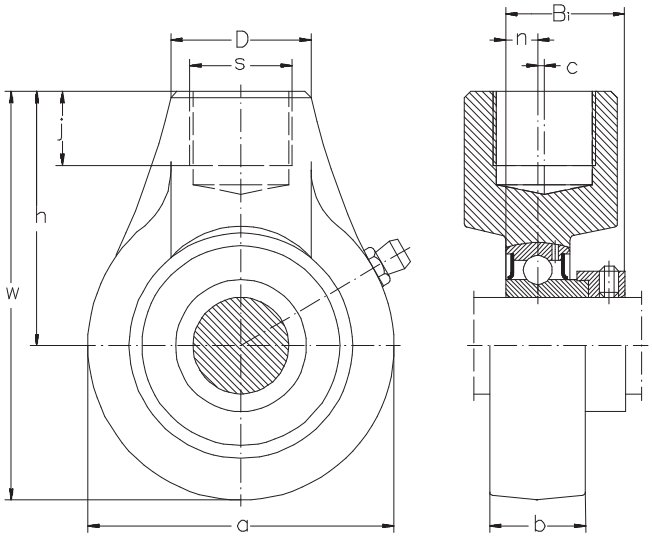

Shaft dia.	Nominal dimensions a	w	c	b	h	s		D	j	Bi	
mm											
20	64	96	0	22	64	RP 3/4	40	19	29,5	7	**SA**
25	78	103	0	23	64	RP 3/4	40	19	30,5	7,5	**SA**
30	78	103	0	25	64	RP 3/4	40	19	33,9	8	**SA**
35	92	116	0	26	70	RP 3/4	40	19	37,5	8,5	**SA**
40	96	121	2	30	73	RP 3/4	40	19	40,5	9,5	**SA**
45	108	136	5	30	82	RP 1	48	21	42,2	10	**SA**
50	115	140,5	5	32	83	RP 1	48	21	43,7	10,5	**SA**
55	126	150	7	33	87	RP 1-1/4	60	24	48,4	11,5	**SA**

Note: Inch sizes available on request.

Standard duty cylindrical cartridge units set screws type

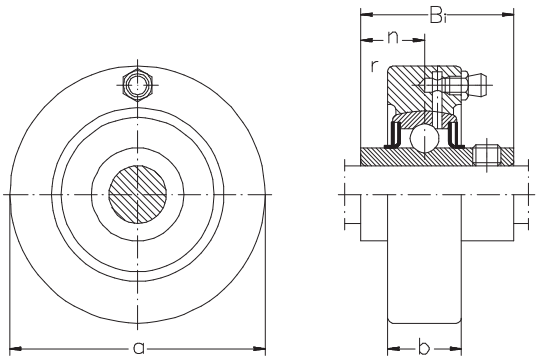

Shaft dia.	Nominal dimensions a	b	r	Bi	n	Unit number	Bearing number	Housing number.	Weight
mm						—			kg
12	72	20	2	31	12,7	**UCC 201**	**UC 201**	**C 204**	0,53
15	72	20	2	31	12,7	**UCC 202**	**UC 202**	**C 204**	0,52
17	72	20	2	31	12,7	**UCC 203**	**UC 203**	**C 204**	0,51
20	72	20	2	31	12,7	**UCC 204**	**UC 204**	**C 204**	0,49
25	80	22	2	34	14,3	**UCC 205**	**UC 205**	**C 205**	0,65
30	85	27	2	38,1	15,9	**UCC 206**	**UC 206**	**C 206**	0,81
35	90	28	2	42,9	17,5	**UCC 207**	**UC 207**	**C 207**	0,90
40	100	30	2,5	49,2	19	**UCC 208**	**UC 208**	**C 208**	1,19
45	110	31	2,5	49,2	19	**UCC 209**	**UC 209**	**C 209**	1,49
50	120	33	2,5	51,6	19	**UCC 210**	**UC 210**	**C 210**	1.92
55	125	35	2,5	55,6	22,2	**UCC 211**	**UC 211**	**C 211**	2,21
60	130	38	2,5	65,1	25,4	**UCC 212**	**UC 212**	**C 212**	2,48
65	140	40	3	65,1	25,4	**UCC 213**	**UC 213**	**C 213**	2,97

Note: Inch sizes available on request.

Standard duty cylindrical cartridge units eccentric locking collar type

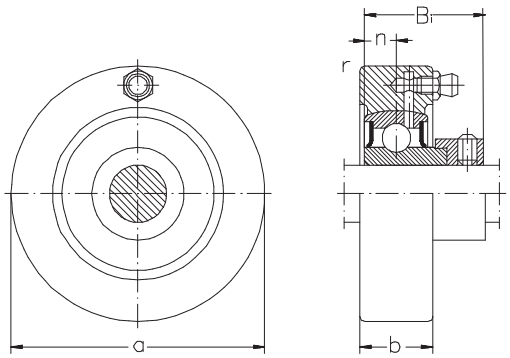

Shaft dia.	Nominal dimensions a	b	r	n	Bi	Unit number	Bearing number	Housing number	Weight
mm						—			kg
20	72	20	2	29,5	7	**SAC 204**	**SA 204**	**C 204**	0,50
25	80	22	2	30,5	7,5	**SAC 205**	**SA 205**	**C 205**	0,64
30	85	27	2	33,9	8	**SAC 206**	**SA 206**	**C 206**	0,82
35	90	28	2	37,5	8,5	**SAC 207**	**SA 207**	**C 207**	0,93
40	100	30	2,5	40,5	9,5	**SAC 208**	**SA 208**	**C 208**	1,20
45	110	31	2,5	42,2	10	**SAC 209**	**SA 209**	**C 209**	1,50
50	120	33	2,5	43,7	10,5	**SAC 210**	**SA 210**	**C 210**	1,92
55	125	35	2,5	48,8	11,5	**SAC 211**	**SA 211**	**C 211**	1,96

Note: Inch sizes available on request.

Standard duty cylindrical cartridge units adapter type

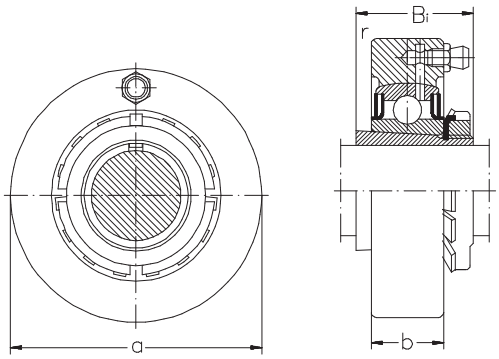

Shaft dia.	Nominal dimensions a	b	r	Bi	Unit number	Bearing number	Housing number	Weight
mm					—			kg
20	80	22	2	35	**UKC 205**	**UK 205**	**C 205**	0,59
25	85	27	2	38	**UKC 206**	**UK 206**	**C 206**	0,74
30	90	28	2	43	**UKC 207**	**UK 207**	**C 207**	0,80
35	100	30	2,5	46	**UKC 208**	**UK 208**	**C 208**	1,03
40	110	31	2,5	50	**UKC 209**	**UK 209**	**C 209**	1,34
45	120	33	2,5	55	**UKC 210**	**UK 210**	**C 210**	1,71
50	125	35	2,5	59	**UKC 211**	**UK 211**	**C 211**	1,86
55	130	38	2,5	62	**UKC 212**	**UK 212**	**C 212**	1,98
60	140	40	3	65	**UKC 213**	**UK 213**	**C 213**	2,47

Standard duty take-up units cast housing set screws type

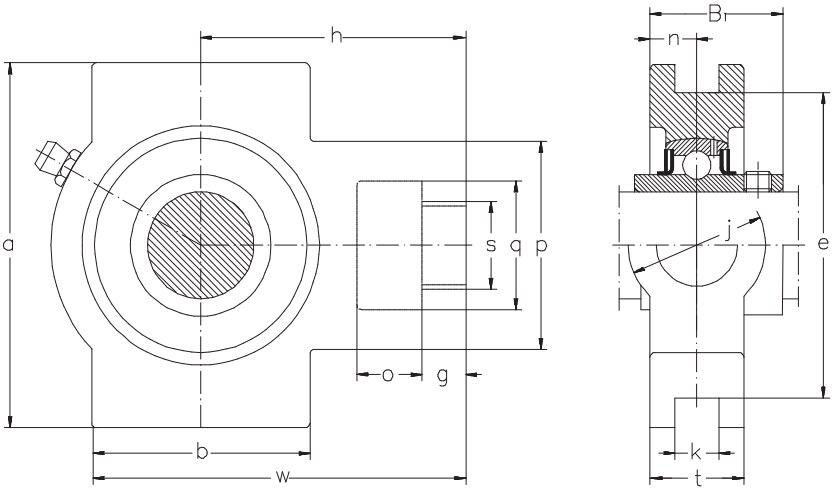

Shaft dia.	Nominal dimensions o	g	p	q	s	b	k	e	a	w	j	t	h	Bi	n	Unit number	Bearing number	Housing number	Weight
mm																—			kg
20	16	10	51	32	19	51	13,5	76	89	94	32	21	61	31	12,7	**UCST 204**	**UC 204**	**ST 204**	0,73
25	16	10	51	32	19	51	13,5	76	89	97	32	24	62	34	14,3	**UCST 205**	**UC 205**	**ST 205**	0,83
30	16	10	56	37	22	57	13,5	89	102	113	37	28	70	38,1	15,9	**UCST 206**	**UC 206**	**ST 206**	1,26
35	16	13	64	37	22	64	13,5	89	102	129	37	30	78	42,9	17,5	**UCST 207**	**UC 207**	**ST 207**	1,58
40	19	16	83	49	29	83	17,5	101	114	144	49	33	88	49,2	19	**UCST 208**	**UC 208**	**ST 208**	2,30
45	19	16	83	49	29	83	17,5	101	117	144	49	35	87	49,2	19	**UCST 209**	**UC 209**	**ST 209**	2,27
50	19	16	83	49	29	86	17,5	101	117	149	49	37	90	51,6	19	**UCST 210**	**UC 210**	**ST 210**	2,49
55	25	19	102	64	35	95	27	130	146	171	64	38	106	55,6	22,2	**UCST 211**	**UC 211**	**ST 211**	3,77
60	32	19	102	64	35	102	27	130	146	194	64	42	119	65,1	25,4	**UCST 212**	**UC 212**	**ST 212**	4,77
65	32	21	111	70	41	121	27	151	167	224	70	44	137	65,1	25,4	**UCST 213**	**UC 213**	**ST 213**	6,65
70	32	21	111	70	41	121	27	151	167	224	70	46	137	74,6	30,2	**UCST 214**	**UC 214**	**ST 214**	6,74
75	32	21	111	70	41	121	27	151	167	232	70	48	140	77,8	33,3	**UCST 215**	**UC 215**	**ST 215**	7,10

Note: Inch sizes available on request.

Standard duty take-up units cast housing set screws type

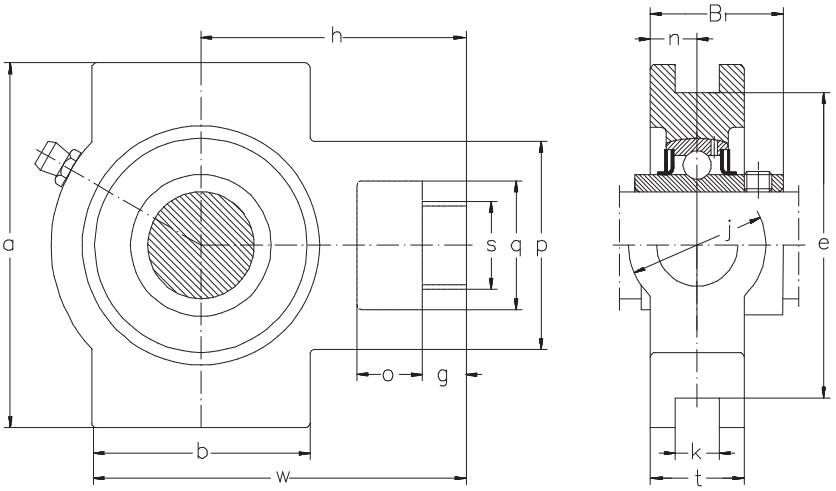

Shaft dia.	Nominal dimensions o	g	p	q	s	b	k	e	a	w	j	t	h	Bi	n	Unit number	Bearing number	Housing number	Weight
mm																—			kg
12	16	10	51	32	19	51	12	76	89	94	32	21	61	31	12,7	**UCT 201**	**UC 201**	**T 204**	0,70
15	16	10	51	32	19	51	12	76	89	94	32	21	61	31	12,7	**UCT 202**	**UC 202**	**T 204**	0,76
17	16	10	51	32	19	51	12	76	89	94	32	21	61	31	12,7	**UCT 203**	**UC 203**	**T 204**	0,75
20	16	10	51	32	19	51	12	76	89	94	32	21	61	31	12,7	**UCT 204**	**UC 204**	**T 204**	0,73
25	16	10	51	32	19	51	12	76	89	97	32	24	62	34	14,3	**UCT 205**	**UC 205**	**T 205**	0,83
30	16	10	56	37	22	57	12	89	102	113	37	28	70	38,1	15,9	**UCT 206**	**UC 206**	**T 206**	1,26
35	16	13	64	37	22	64	12	89	102	129	37	30	78	42,9	17,5	**UCT 207**	**UC 207**	**T 207**	1 ,58
40	19	16	83	49	29	83	16	102	114	144	49	33	88	49,2	19	**UCT 208**	**UC 208**	**T 208**	2,31
45	19	16	83	49	29	83	16	102	117	144	49	35	87	49,2	19	**UCT 209**	**UC 209**	**T 209**	2,28
50	19	16	83	49	29	86	16	102	117	149	49	37	90	51,6	19	**UCT 210**	**UC 210**	**T 210**	2,50
55	25	19	102	64	35	95	22	130	146	171	64	38	106	55,6	22,2	**UCT 211**	**UC 211**	**T 211**	3,79
60	32	19	102	64	35	102	22	130	146	194	64	42	119	65,1	25,4	**UCT 212**	**UC 212**	**T 212**	4,79
65	32	21	111	70	41	121	26	151	167	224	70	44	137	65,1	25,4	**UCT 213**	**UC 213**	**T 213**	6,66
70	32	21	111	70	41	121	26	151	167	224	70	46	137	74,6	30,2	**UCT 214**	**UC 214**	**T 214**	6,75
75	32	21	111	70	41	121	26	151	167	232	70	48	140	77,8	33,3	**UCT 215**	**UC 215**	**T 215**	7,11
80	32	21	111	70	41	121	26	165	184	235	70	51	140	82,6	33,3	**UCT 216**	**UC 216**	**T 216**	8,19
85	38	29	124	73	48	157	30	173	198	260	73	54	162	85,7	34,1	**UCT 217**	**UC 217**	**T 217**	10,58

Note: Inch sizes available on request.

Standard duty take-up units cast housing eccentric locking collar type

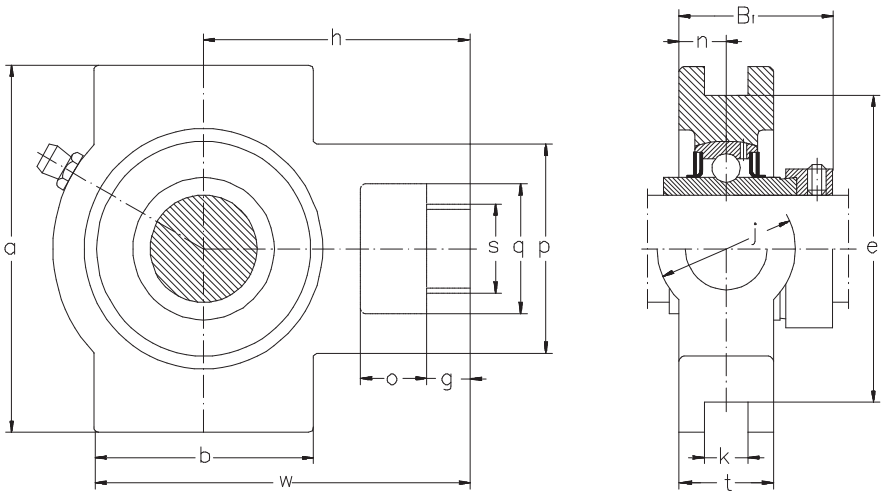

Shaft dia.	Nominal dimensions o	g	p	q	s	b	k	e	a	w	j	t	h	Bi	n	Unit number	Bearing number	Housing number	Weight
mm																—			kg
20	16	10	51	32	19	51	13,5	76	89	94	32	21	61	29,5	7	**SAST 204**	**SA 204**	**ST 204**	0,74
25	16	10	51	32	19	51	13,5	76	89	97	32	24	62	30,5	7,5	**SAST 205**	**SA 205**	**ST 205**	0,82
30	16	10	56	37	22	57	13,5	89	102	113	37	28	70	33,9	8	**SAST 206**	**SA 206**	**ST 206**	1,27
35	16	13	64	37	22	64	13,5	89	102	129	37	30	78	37,5	8,5	**SAST 207**	**SA 207**	**ST 207**	1,61
40	19	16	83	49	29	83	17,5	101	114	144	49	33	88	40,5	9,5	**SAST 208**	**SA 208**	**ST 208**	2,31
45	19	16	83	49	29	83	17,5	101	117	144	49	35	87	42,2	10	**SAST 209**	**SA 209**	**ST 209**	2,28
50	19	16	83	49	29	86	17,5	101	117	149	49	37	90	43,7	10,5	**SAST 210**	**SA 210**	**ST 210**	2,49
55	25	19	102	64	35	95	27	130	146	171	64	38	106	48,4	11,5	**SAST 211**	**SA 211**	**ST 211**	3,52

Note: Inch sizes available on request.

Standard duty take-up units cast housing eccentric locking collar type

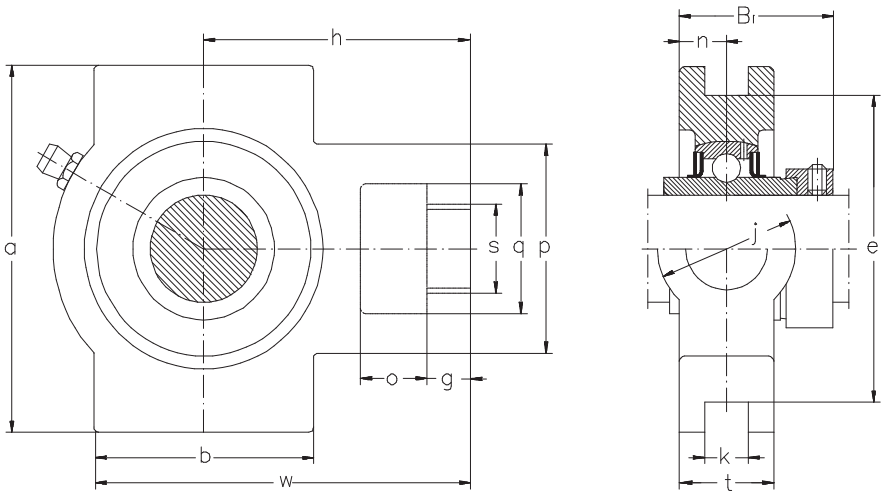

Shaft dia.	Nominal dimensions o	g	p	q	s	b	k	e	a	w	j	t	h	Bi	n	Unit number	Bearing number	Husing number	Weight
mm																—			kg
20	16	10	51	32	19	51	12	76	89	94	32	21	61	29,5	7	**SAT 204**	**SA 204**	**T 204**	0,74
25	16	10	51	32	19	51	12	76	89	97	32	24	62	30,5	7,5	**SAT 205**	**SA 205**	**T 205**	0,82
30	16	10	56	37	22	57	12	89	102	113	37	28	70	33,9	8	**SAT 206**	**SA 206**	**T 206**	1,27
35	16	13	64	37	22	64	12	89	102	129	37	30	78	37,5	8,5	**SAT 207**	**SA 207**	**T 207**	1 ,61
40	19	16	83	49	29	83	16	102	114	144	49	33	88	40,5	9,5	**SAT 208**	**SA 208**	**T 208**	2,32
45	19	16	83	49	29	83	16	102	117	144	49	35	87	42,2	10	**SAT 209**	**SA 209**	**T 209**	2,29
50	19	16	83	49	29	86	16	102	117	149	49	37	90	43,7	10,5	**SAT 210**	**SA 210**	**T 210**	2,50
55	25	19	102	64	35	95	22	130	146	171	64	38	106	48,4	11,5	**SAT 211**	**SA 211**	**T 211**	3,54

Note: Inch sizes available on request.

Standard duty take-up units cast housing eccentric locking collar type

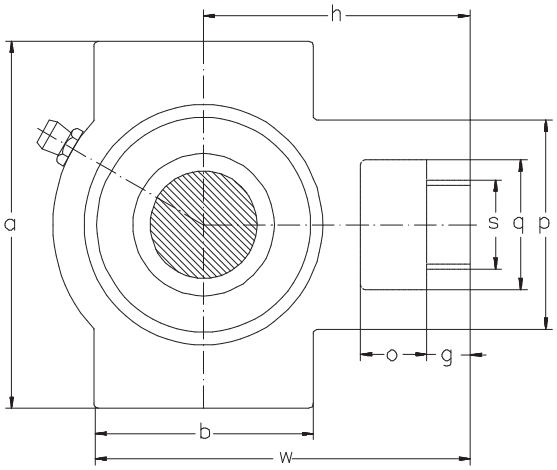

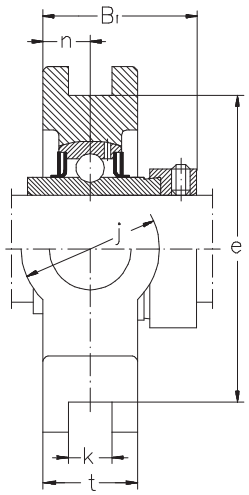

Shaft dia.	Nominal dimensions o	g	p	q	s	b	k	e	a	w	j	t	h	Bi	n	Unit nmber	Bearing number	Housing number	Weight
mm																—			kg
20	16	10	51	32	19	51	13,5	76	89	94	32	21	61	43,5	17	**UELST 204**	**UEL 204**	**ST 204**	0,78
25	16	10	51	32	19	51	13,5	76	89	97	32	24	62	44,3	17,4	**UELST 205**	**UEL 205**	**ST 205**	0,87
30	16	10	56	37	22	57	13,5	89	102	113	37	28	70	48,3	18,2	**UELST 206**	**UEL 206**	**ST 206**	1,35
35	16	13	64	37	22	64	13,5	89	102	129	37	30	78	51,1	18,8	**UELST 207**	**UEL 207**	**ST 207**	1,71
40	19	16	83	49	29	83	17,5	101	114	144	49	33	88	56,3	21,4	**UELST 208**	**UEL 208**	**ST 208**	2,44
45	19	16	83	49	29	83	17,5	101	117	144	49	35	87	56,3	21,4	**UELST 209**	**UEL 209**	**ST 209**	2,44
50	19	16	83	49	29	86	17,5	101	117	149	49	37	90	62,7	24,6	**UELST 210**	**UEL 210**	**ST 210**	2,70
55	25	19	102	64	35	95	27	130	146	171	64	38	106	71,3	27,7	**UELST 211**	**UEL 211**	**ST 211**	4,04
60	32	19	102	64	35	102	27	130	146	194	64	42	119	77,7	30,9	**UELST 212**	**UEL 212**	**ST 212**	5,11
65	32	21	111	70	41	121	27	151	167	224	70	44	137	85,7	34,1	**UELST 213**	**UEL 213**	**ST 213**	7,20
70	32	21	111	70	41	121	27	151	167	224	70	46	137	85,7	34,1	**UELST 214**	**UEL 214**	**ST 214**	7,26
75	32	21	111	70	41	121	27	151	167	232	70	48	140	92,1	37,3	**UELST 215**	**UEL 215**	**ST 215**	7,73

Note: Inch sizes available on request.

Standard duty take-up units cast housing eccentric locking collar type

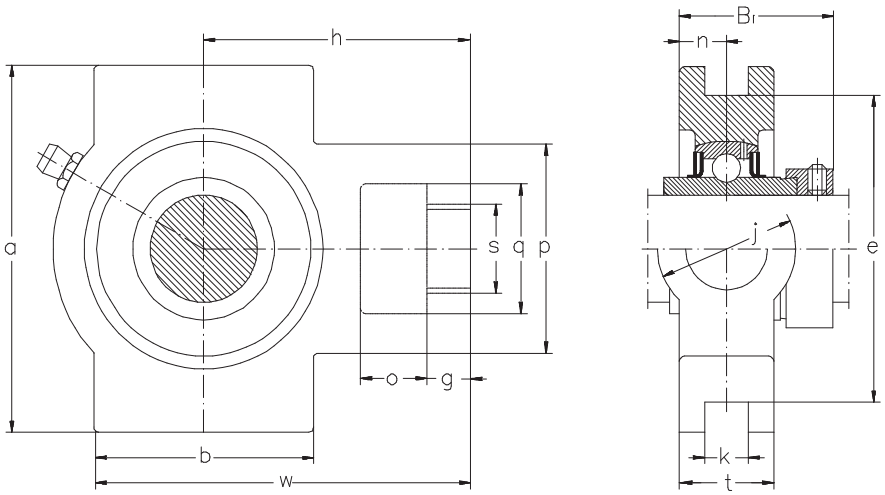

Shaft dia.	Nominal dimensions o	g	p	q	s	b	k	e	a	w	j	t	h	Bi	n	Unit number	Bearing number	Housing number	Weight
mm																—			kg
12	16	12	51	32	19	51	12	76	89	94	32	21	61	43,5	17	**UELT 201**	**UEL 201**	**T 204**	0,83
15	16	12	51	32	19	51	12	76	89	94	32	21	61	43,5	17	**UELT 202**	**UEL 202**	**T 204**	0,81
17	16	12	51	32	19	51	12	76	89	94	32	21	61	43,5	17	**UELT 203**	**UEL 203**	**T 204**	0,80
20	16	12	51	32	19	51	12	76	89	94	32	21	61	43,5	17	**UELT 204**	**UEL 204**	**T 204**	0,78
25	16	12	51	32	19	51	12	76	89	97	32	24	62	44,3	17,4	**UELT 205**	**UEL 205**	**T 205**	0,87
30	16	12	56	37	22	57	12	89	102	113	37	28	70	48,3	18,2	**UELT 206**	**UEL 206**	**T 206**	1,35
35	16	15	64	37	22	64	12	89	102	129	37	30	78	51,1	18,8	**UELT 207**	**UEL 207**	**T 207**	1,71
40	19	18	83	49	29	83	16	102	114	144	49	33	88	56,3	21,4	**UELT 208**	**UEL 208**	**T 208**	2,45
45	19	18	83	49	29	83	16	102	117	144	49	35	87	56,3	21,4	**UELT 209**	**UEL 209**	**T 209**	2,45
50	19	18	83	49	29	86	16	102	117	149	49	37	90	62,7	24,6	**UELT 210**	**UEL 210**	**T 210**	2,71
55	25	21	102	64	35	95	22	130	146	171	64	38	106	71,3	27,7	**UELT 211**	**UEL 211**	**T 211**	4,06
60	32	21	102	64	35	102	22	130	146	194	64	42	119	77,7	30,9	**UELT 212**	**UEL 212**	**T 212**	5,13
65	32	23	111	70	41	121	26	151	167	224	70	44	137	85,7	34,1	**UELT 213**	**UEL 213**	**T 213**	7,21
70	32	23	111	70	41	121	26	151	167	224	70	46	137	85,7	34,1	**UELT 214**	**UEL 214**	**T 21 4**	7,27
75	32	23	111	70	41	121	26	151	167	232	70	48	140	92,1	37,3	**UELT 215**	**UEL 215**	**T 215**	7,74

Note: Inch sizes available on request.